TACVG



weatherproof cover with Mighty Post Adapter section for use with Mighty Posts for self standing use in the yard. Adapter section and cap made from the same tough ABS as our posts. Fits 2 1/2" pipe for a DIY post. Cap and close up plug supplied.

Color: Verde green

Weight: 1.1 lbs

Project:	Type:
Prepared By:	Date:

Technical Specifications

Compliance

UL Listed:
Suitable for wet locations. Fixtures with ground wire must be used.

Trade Agreements Act Compliant:
This product is a product of Cambodia and a "designated country" end product that complies with the Trade Agreements Act

Construction

Materials:
Post PVC Cap ABS In-Use Cover Clear PVC MP Adapter ABS Junction Box Polycarbonate

Set Screw:
Locks cap to post and prevents rotation

Copyright © 2025 RAB Lighting All Rights Reserved Note: Specifications are subject to change at any time without notice

Dimensions

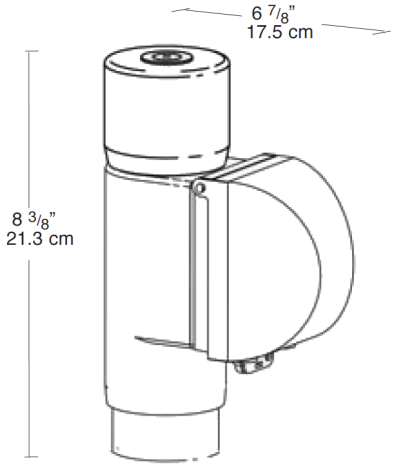

Features

- Clear PVC plastic turtle cover with lockable latch
- Fits all standard rectangular covers
- Close up plug included
- Knockout holes in bottom of Post Adapter for easy wiring
- Mighty Post Adapter extends post height to keep outlets above plants and snow
- Add an electrical box to your Might Post and Lawn Light combo

Copyright © 2025 RAB Lighting All Rights Reserved Note: Specifications are subject to change at any time without notice