VAN3F42MS



Sensor controlled Vandalproof fixtures. VAN 3 up to 42 Watts CFL. VAN5 up to 96 Watts CFL, VAN6 up to 26 Watts CFL @ 120v. Sensor color matched to fixture. Sensor is not vandalproof. Lamp supplied.

Color: Bronze

Weight: 7.0 lbs

Project:	Type:
Prepared By:	**Date:**

Lamp Info

Type	42W Triple
Watts	42W
Shape/Size	N/A
Base	N/A
ANSI	N/A
Hours	12,000
Lamp Lumens	3,200 lm
Efficacy	69.6 lm/W

Ballast Info

Type	Electronic QT
120V	0.38A
208V	N/A
240V	N/A
277V	N/A
Input Watts	46W

Technical Specifications

Compliance

UL Listed:
Suitable for wet locations

Electrical

Voltage:
120V AC 60Hz

Surge Protection:
Withstands up to 3000 volts

Manual Override:
Double flip wall switch logic prevents activation by short power outages. Resets after 8 hours. No extra wiring needed.

Sensor Settings

Time Adjustment:
5 seconds to 15 minutes CFL lamps have longer life if Time Adjustment is set to > 7 minutes

Quick Test Time:
5 seconds test time for fast installation. Works day or night.

"No Hands" Auto Testing:
Auto mode starts after 4 minutes of testing. No adjustment needed.

Sensor Case Construction:
Precision molded Lexan

Photocontrol:
Deactivates lights during daylight

Construction

Vandal Resistant Lens:
Hard lens resists vandalism

Built for Severe Conditions:
Double weatherproofing for long life

Min Start Temp:
0°

Ballast Minimum Starting Temperature:
0°F

LED Characteristics

LED Detection Indicator:
Glows red day and night for "on-guard" deterrence

Copyright © 2025 RAB Lighting All Rights Reserved Note: Specifications are subject to change at any time without notice

VAN3F42MS

Dimensions

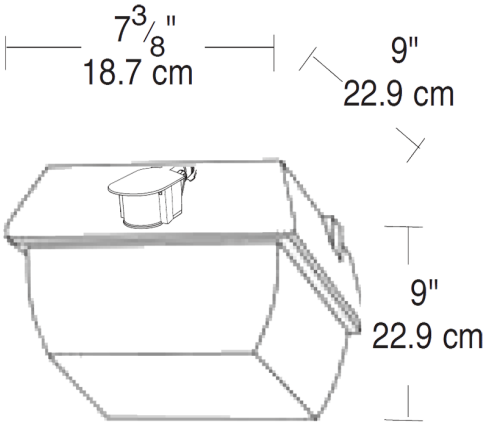

Features

- Precision die cast aluminum housing with durable polyester powder coating
- Cutoff and standard Wall packs
- LED "on guard" indicator
- Can be wired in parallel
- Adjustable mini sensor with 180 detection patterned
- Sensor color matches fixture
- Vandal proof fixtures offer sensor controlled compact fluorescent up to 96 Watts

Copyright © 2025 RAB Lighting All Rights Reserved Note: Specifications are subject to change at any time without notice