VAN4 INSTALLATION INSTRUCTIONS

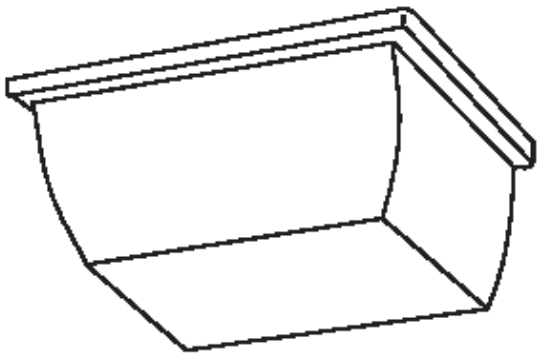

c UL US LISTED
SUITABLE FOR WET LOCATIONS

Thank you for buying RAB lighting fixtures. Our aim is to design the best quality products so you can get the job done right. We'd like to hear your comments. Call us at 888-RAB-1000, attention Marketing Department.

IMPORTANT

READ CAREFULLY BEFORE INSTALLING FIXTURE. RETAIN INSTRUCTIONS FOR FUTURE REFERENCE.
RAB Vandalproof fixtures must be wired in accordance with the National Electrical Code and applicable local codes. Proper grounding is required for safety. Vandalproof fixtures are for indoor or outdoor use and should not be used in areas with limited ventilation or high ambient temperatures. Installation should be done by a qualified electrician.
WARNING: *Make certain power is OFF before installing or maintaining fixture.*

LOCATION

Fixture can be wall or ceiling mounted, but should not be recessed.

MOUNTING

1. Remove refractor from backplate.
2. Attach universal crossbar to junction box with two screws provided.
3. Thread mounting nipple (provided) through center hole of backplate and into the crossbar. Secure with locking cap and locknut.
4. Place fiberglass insulation on backplate, followed by gasket. (Van 1i only)
5. Connect fixture leads to supply leads with wire nuts.
6. Install lamp and replace refractor.

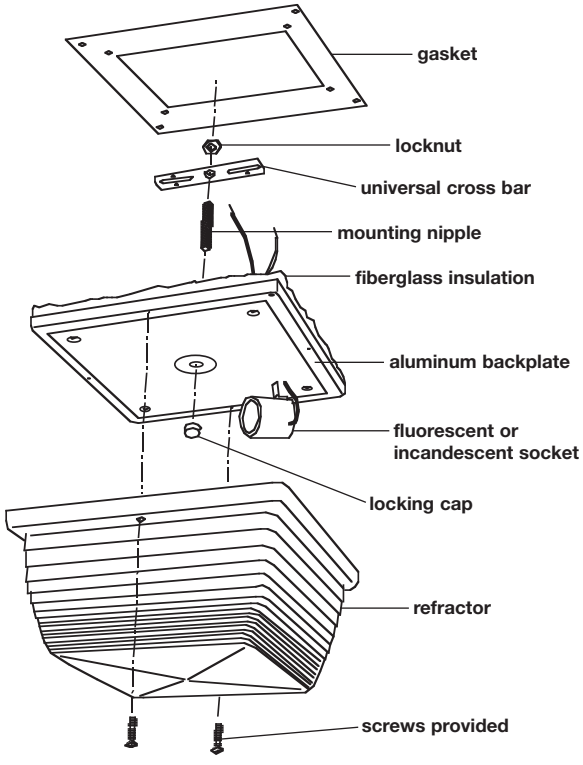

TAMPERPROOF SCREWS

RAB Vandalproof fixtures are shipped with both standard Phillips head screws and tamperproof screws. For maximum security, use tamperproof screw.

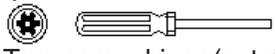

Tighten with Center Pin Torx screwdriver (catalog #Vandriver).

VAN4 INSTALLATION INSTRUCTIONS

WIRING

1. Connect the fixture lead to the 120v supply lead.
2. Connect the common fixture lead to white supply lead.
3. Connect supply ground wire to fixture ground screw.

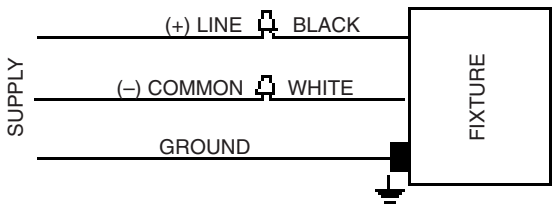

RE-LAMPING

Disconnect power. Make sure fixture and lamp are cool enough to touch.

1. Loosen screws holding refractor.
2. Remove refractor and install lamp.
3. Close refractor and re-install screws.

CAUTION: *Prior to installing, check that the lamp is of proper type and wattage. Observe lamp manufacturer's recommendations on lamp operation, ballast type and burning positions.*

REPLACEMENT LAMPS

Product	Wattage	Type	Catalog #	Base Type	Minimum Start Temp.
Van 4	26 watt	CFL	LCFL26	GX24-Q3 base	0°F / -18°C

CLEANING

CAUTION: *Be sure power is off. Be sure fixture temperature is cool enough to touch.*
Clean reflector and lens with a cloth moistened with non-abrasive glass cleaning solution.

TROUBLESHOOTING CHECKLIST

❑ 1. Proper lamp is installed. Lamp is not faulty.
❑ 2. Line voltage at the fixture is proper.
❑ 3. Fixture is wired properly.
❑ 4. Fixture is grounded properly.

*THESE INSTRUCTIONS **DO NOT** COVER ALL DETAILS OR VARIATIONS IN EQUIPMENT, NOR DO THEY PROVIDE FOR EVERY POSSIBLE CONTINGENCY TO BE MET IN CONNECTION WITH INSTALLATION, OPERATION OR MAINTENANCE.*

RAB LIGHTING
©2010 RAB LIGHTING Inc.
Northvale, New Jersey 07647 USA

Easy Installation & Product Help

Tech Help Line	*Toll Free Fax*	*e-mail*	*Lightinglayouts.com*	*rabweb.com*
Call our experts 888 RAB-1000	Send a fax to RAB 888 RAB-1232	Answered promptly sales@rabweb.com	Easy lighting layouts in minutes	Visit our website for product info