WPLED26DC INSTALLATION INSTRUCTIONS

Thank you for buying RAB LED lighting. Comments? Call us at 888-RAB-1000, or email: marketing@rabweb.com



Junction Box

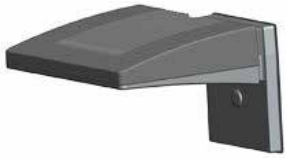

Surface Mount

IMPORTANT

READ CAREFULLY BEFORE INSTALLING FIXTURE. RETAIN THESE INSTRUCTIONS FOR FUTURE REFERENCE.
RAB fixtures must be wired in accordance with the National Electrical Code and all applicable local codes. Proper grounding is required for safety. THIS PRODUCT MUST BE INSTALLED IN ACCORDANCE WITH THE APPLICABLE INSTALLATION CODE BY A PERSON FAMILIAR WITH THE CONSTRUCTION AND OPERATION OF THE PRODUCT.
WARNING: Make certain power is OFF before installing or maintaining fixture. No user serviceable parts inside.

FIXTURE MOUNTING

To ensure weatherproof seal, apply weatherproof silicone sealant around the edge of the **Housing** and/or **Back Box**. This is especially important with an uneven wall surface. Silicone all plugs and unused conduit entries.

JUNCTION BOX MOUNT FOR CONDUIT

For use on applications where conduit wiring is needed.

1. Loosen and remove (4) **Lens Screws**. Remove **Door**.
2. Loosen and remove (2) **Housing Screws**. Remove **Housing** from **Back Box**. Keep **Housing Gasket** intact for re-assembly.
3. Secure **Back Box** to the mounting surface using hardware appropriate for that mounting surface.
4. Wire the fixture using UL listed wire connectors according to NEC and local codes. Apply sealant to all unused conduit entry points.
5. Place **Gasket** between **Back Box** and **Housing**. Re-mount **Housing** to **Back Box**. Check **Housing Gasket** seal all around the **Back Box**.
6. Re-mount **Door** to **Housing**. Tighten (4) **Lens Screws.** Check door gasket (not shown) seal.
7. Fixture can be mounted in a downlight or uplight position. Fixture may not melt heavy snow accumulation in an uplight position.
   CAUTION: For proper weatherproof function all gaskets must be seated properly and all screws inserted and tightened firmly.

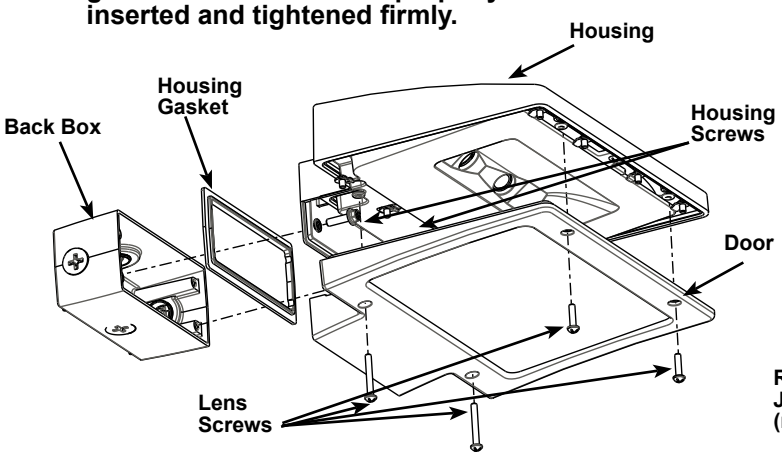

SURFACE MOUNT FOR RECESSED JUNCTION BOX

For use with recessed junction box and wiring.

1. Mount **Surface Plate** to fixture with (4) **Surface Plate Screws**. There are two screws from the front and two screws from the back. Make sure **Housing Gasket** makes complete seal all the way around.
2. Use supplied crossbar. Mount **Crossbar** to recessed junction box with (2) screws.
3. Place **Junction Box Gasket** on back of the fixture. Gasket should create seal against mounting surface.
4. Wire fixture to supply wires in recessed junction box according to wiring section.
5. Use 1/4 x 20 stainless steel **Mounting Screw** to attach fixture to Crossbar. Tighten **Mounting Screw**.
6. Cover screw with **Cap,** provided.
7. Fixture can be mounted in a downlight or uplight position. Fixture may not melt heavy snow accumulation in an uplight position.
   CAUTION: For proper weatherproof function all gaskets must be seated properly and all screws inserted and tightened firmly.

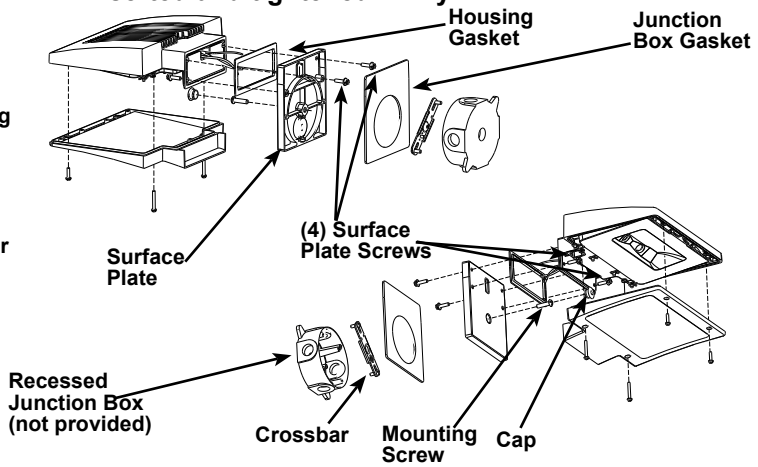

WPLED26DC INSTALLATION INSTRUCTIONS

JUNCTION BOX

1. The Junction box has (4) conduit entry points on the center of each side and (1) in the center back.

2. **Mounting Points** are dimensioned below.

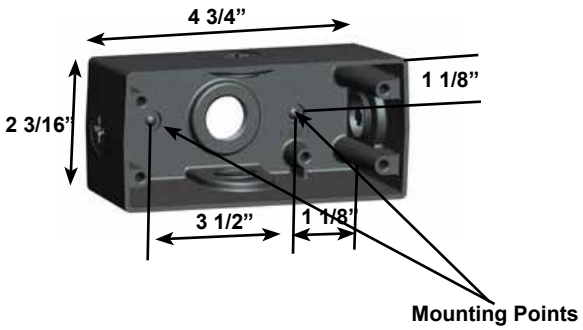

WIRING

Universal DC voltage driver permits operation at 10VDC to 30VDC.

1. Connect the WHITE fixture lead to the (+) supply lead.

2. Connect the BLACK fixture lead to the (-) supply lead.

3. Connect the bare copper Ground wire from fixture to supply ground.

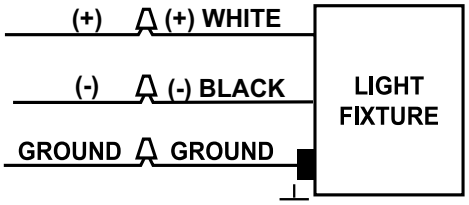

CLEANING & MAINTENANCE

CAUTION: Be sure fixture temperature is cool enough to touch. Do not clean or maintain while fixture is energized.

1. Clean glass lens with non-abrasive glass cleaning solution.

2. Do not open fixture to clean the LED. Do not touch the LED.

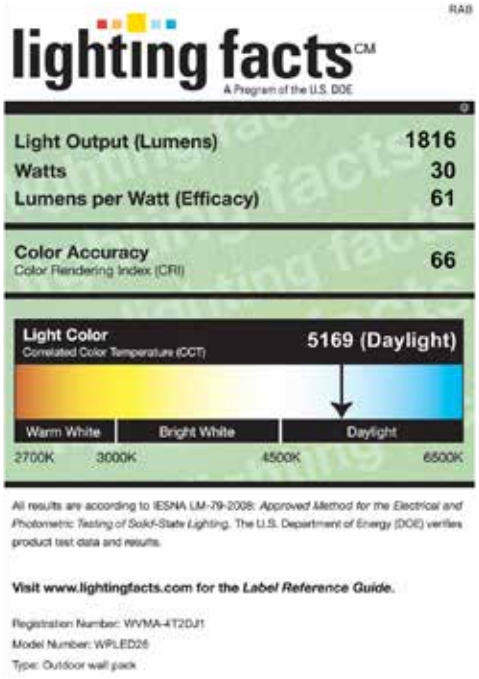

TROUBLESHOOTING

1. Check that the line voltage at fixture is correct. Refer to wiring directions.

2. Is the fixture is grounded properly?

3. Is the photocell, if used, functioning properly?

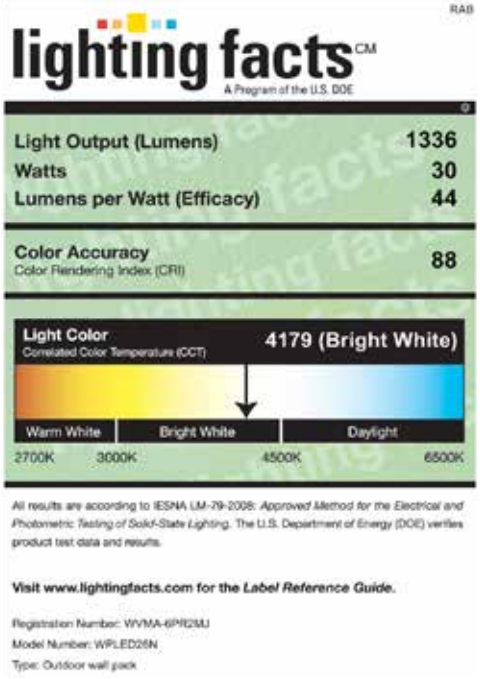

Note: These instructions do not cover all details or variations in equipment nor do they provide for every possible situation during installation, operation or maintenance.

US and International Patents Pending

© 2011 RAB LIGHTING Inc.
Northvale, New Jersey 07647 USA
WPLED26DC-IN-0213

Easy Installation & Product Help

Tech Help Line	*Toll Free Fax*	*rabweb.com*	*e-mail*
Call our experts	Send a fax to RAB	Visit our website	Answered promptly
888 RAB-1000	888 RAB-1232	for product info	sales@rabweb.com

WPLED20DC INSTALLATION INSTRUCTIONS

Thank you for buying RAB LED lighting. Comments? Call us at 888-RAB-1000, or email: marketing@rabweb.com

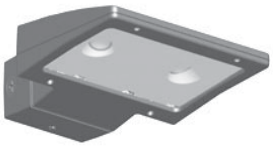

Junction Box

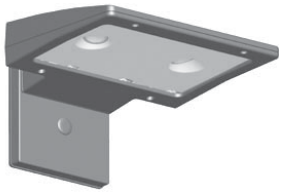

Surface Mount

IMPORTANT

READ CAREFULLY BEFORE INSTALLING FIXTURE. RETAIN THESE INSTRUCTIONS FOR FUTURE REFERENCE.
RAB fixtures must be wired in accordance with the National Electrical Code and all applicable local codes. Proper grounding is required for safety. THIS PRODUCT MUST BE INSTALLED IN ACCORDANCE WITH THE APPLICABLE INSTALLATION CODE BY A PERSON FAMILIAR WITH THE CONSTRUCTION AND OPERATION OF THE PRODUCT.
WARNING: Make certain power is OFF before installing or maintaining fixture. No user serviceable parts inside.

FIXTURE MOUNTING

To ensure weatherproof seal, apply weatherproof silicone sealant around the edge of the **Housing** and/or **Back Box**. This is especially important with an uneven wall surface. Silicone all plugs and unused conduit entries.

JUNCTION BOX MOUNT FOR CONDUIT

For use on applications where conduit wiring is needed.

1. Loosen and remove (4) **Lens Screws**. Remove **Door**.
2. Loosen and remove (2) **Housing Screws**. Remove **Housing** from **Back Box**. Keep **Housing Gasket** intact for re-assembly.
3. Secure **Back Box** to the mounting surface using hardware appropriate for that mounting surface.
4. Wire the fixture using UL listed wire connectors according to NEC and local codes. Apply sealant to all unused conduit entry points.
5. Place **Gasket** between **Back Box** and **Housing**. Re-mount **Housing** to **Back Box**. Check **Housing Gasket** seal all around the **Back Box**.
6. Re-mount **Door** to **Housing**. Tighten (4) **Lens Screws.** Check door gasket (not shown) seal.
7. Fixture can be mounted in a downlight or uplight position. Fixture may not melt heavy snow accumulation in an uplight position.
   CAUTION: For proper weatherproof function all gaskets must be seated properly and all screws inserted and tightened firmly.

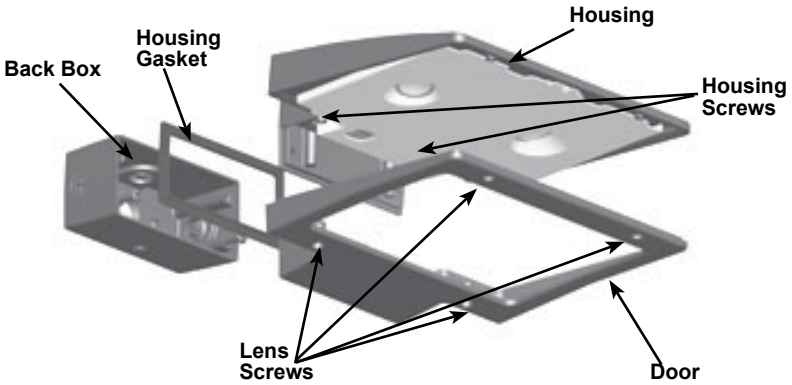

SURFACE MOUNT FOR RECESSED JUNCTION BOX

For use with recessed junction box and wiring.

1. Mount **Surface Plate** to fixture with (4) **Surface Plate Screws**. There are two screws from the front and two screws from the back. Make sure **Housing Gasket** makes complete seal all the way around.
2. Use supplied crossbar. Mount **Crossbar** to recessed junction box with (2) screws.
3. Place **Junction Box Gasket** on back of the fixture. Gasket should create seal against mounting surface.
4. Wire fixture to supply wires in recessed junction box according to wiring section.
5. Use 1/4 x 20 stainless steel **Mounting Screw** to attach fixture to Crossbar. Tighten **Mounting Screw**.
6. Cover screw with **Cap,** provided.
7. Fixture can be mounted in a downlight or uplight position. Fixture may not melt heavy snow accumulation in an uplight position.
   CAUTION: For proper weatherproof function all gaskets must be seated properly and all screws inserted and tightened firmly.

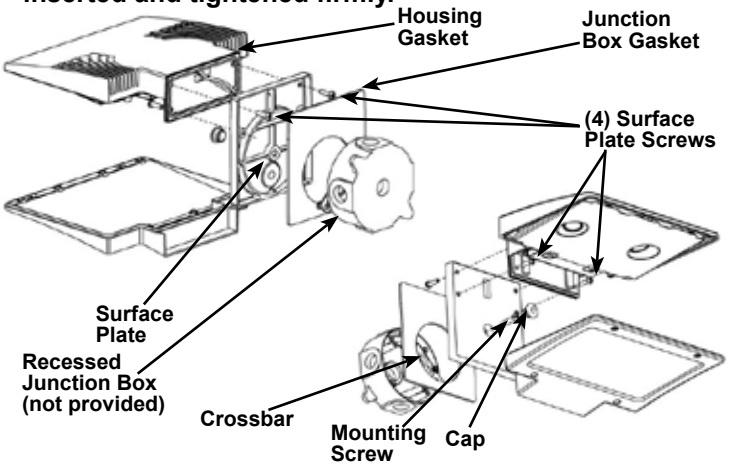

WPLED20DC INSTALLATION INSTRUCTIONS

JUNCTION BOX

1. The Junction box has (4) conduit entry points on the center of each side and (1) in the center back.
2. **Mounting Points** are dimensioned below.

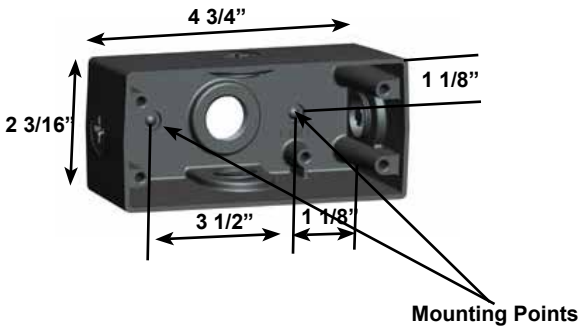

WIRING

Universal DC voltage driver permits operation at 10VDC to 30VDC.

1. Connect the WHITE fixture lead to the (+) supply lead.
2. Connect the BLACK fixture lead to the (-) supply lead.
3. Connect the bare copper Ground wire from fixture to supply ground.

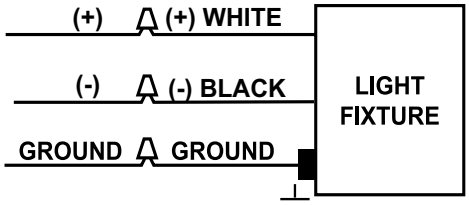

CLEANING & MAINTENANCE

CAUTION: Be sure fixture temperature is cool enough to touch. Do not clean or maintain while fixture is energized.

1. Clean glass lens with non-abrasive glass cleaning solution.
2. Do not open fixture to clean the LED. Do not touch the LED.

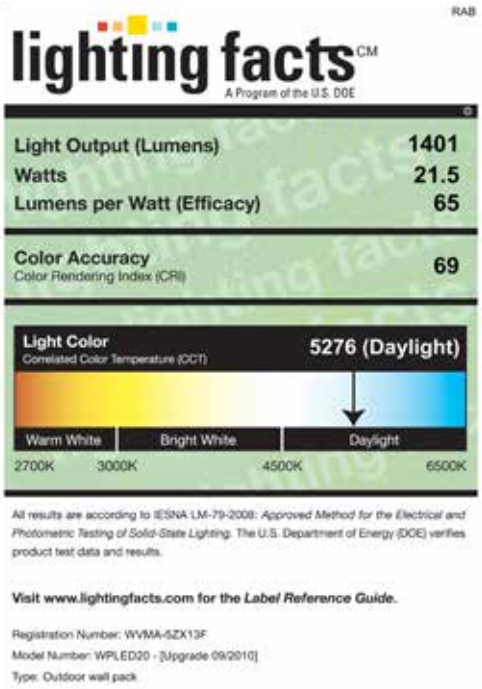

TROUBLESHOOTING

1. Check that the line voltage at fixture is correct. Refer to wiring directions.
2. Is the fixture is grounded properly?

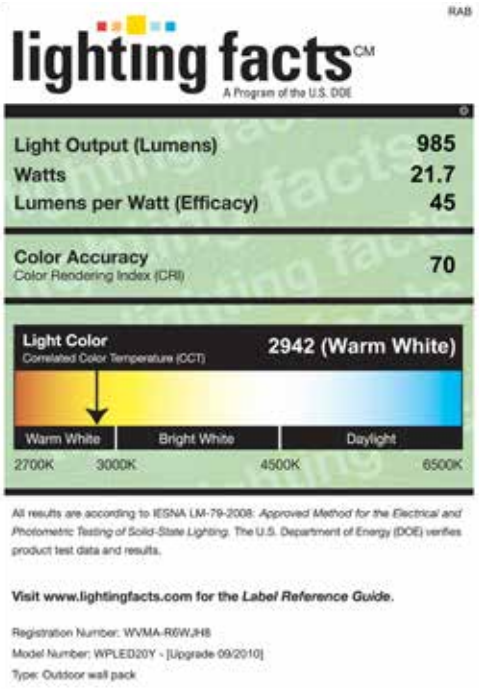

Note: These instructions do not cover all details or variations in equipment nor do they provide for every possible situation during installation, operation or maintenance.

US and International Patents Pending

© 2011 RAB LIGHTING Inc.
Northvale, New Jersey 07647 USA
WPLED20DC-IN-0213

Easy Installation & Product Help

Tech Help Line	*Toll Free Fax*	*rabweb.com*	*e-mail*
Call our experts	Send a fax to RAB	Visit our website	Answered promptly
888 RAB-1000	888 RAB-1232	for product info	sales@rabweb.com