WPLED5Y



LED 5W Wall packs. patent-pending thermal management system. 100,000 hour L70 lifespan. 5-year, no-compromise warranty.

Color: Bronze

Weight: 2.0 lbs

Project:	**Type:**
Prepared By:	**Date:**

Driver Info

Type	Constant Current
120V	0.18A
208V	0.18A
240V	0.18A
277V	N/A
Input Watts	5.3W

LED Info

Watts	5W
Color Temp	3000K (Warm)
Color Accuracy	88 CRI
L70 Lifespan	100,000 Hours
Lumens	128 lm
Efficacy	24.2 lm/W

Technical Specifications

Compliance

UL Listed:
Suitable for wet locations in downlight position only. Suitable for mounting within 4ft (1.2m) of the ground.

IP Rating:
Ingress protection rating of IP66 for dust and water

IESNA LM-79 & LM-80 Testing:
RAB LED luminaires and LED components have been tested by an independent laboratory in accordance with IESNA LM-79 and LM-80.

Dark Sky Conformance:
Allows for conformance to the IDA's fully shielding requirement, emitting no light above 90 degrees.

Performance

Lifespan:
100,000-Hour LED lifespan based on IES LM-80 results and TM-21 calculations

Wattage Equivalency:
Equivalent to 13W CFL or 60W Incandescent

Other

Patents:
The WPLED design is protected by patents pending in the U.S., Canada, China, Taiwan and Mexico.

Warranty:
RAB warrants that our LED products will be free from defects in materials and workmanship for a period of five (5) years from the date of delivery to the end user, including coverage of light output, color stability, driver performance and fixture finish. RAB's warranty is subject to all terms and conditions found at rablighting.com/warranty.

LED Characteristics

LEDs:
5W, high-output, long-life LED

Color Temperature:
3000K

Color Consistency:
3-step MacAdam Ellipse binning to achieve consistent fixture-to-fixture color

Color Stability:
LED color temperature is warrantied to shift no more than 200K in color temperature over a 5-year period

Color Uniformity:
RAB's range of Correlated Color Temperature follows the guidelines of the American National Standard for Specifications for the Chromaticity of Solid State Lighting (SSL) Products, ANSI C78.377-2017.

Construction

Ambient Temperature:
Suitable for use in up to 40°C (104°F)

Cold Weather Starting:
The minimum starting temperature is -40°C (-40°F)

Housing:
Precision die-cast aluminum housing and mounting plate. 1 1/2" backbox with three 1/2" conduit entry points.

Gaskets:
High-temperature silicone gaskets

Finish:
Formulated for high durability and long-lasting color

Green Technology:
Mercury and UV free. RoHS-compliant components.

Electrical

Drivers:
Constant current, Class 2, 100 - 240VAC, 50 - 60 Hz, 0.18 Amps.

Surge Protection:
1 KV

Copyright © 2025 RAB Lighting All Rights Reserved Note: Specifications are subject to change at any time without notice

Dimensions

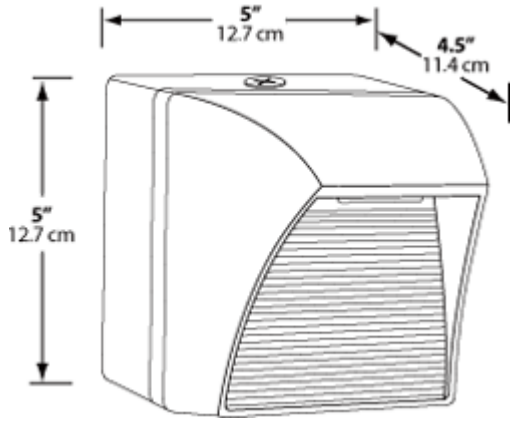

Features

- High performance LED light engine
- Maintains 70% of initial lumens at 100,000-hours
- Weatherproof high temperature silicone gaskets
- Superior heat sinking with die cast aluminum housing and external fins
- Replaces 13W CFL or 60W Incandescent
- 100 up to 240 Volts
- 5-Year, No-Compromise Warranty

Copyright © 2025 RAB Lighting All Rights Reserved Note: Specifications are subject to change at any time without notice