WPLEDC52NW/PCS



LED 52W Wall packs. 3 cutoff options. patent-pending thermal management system. 100,000 hour L70 lifespan. 5-year, no-compromise warranty.

Color: White

Weight: 17.6 lbs

Project:	**Type:**
Prepared By:	**Date:**

Driver Info

Type	Constant Current
120V	0.51A
208V	N/A
240V	N/A
277V	N/A
Input Watts	56.4W

LED Info

Watts	52W
Color Temp	4000K (Neutral)
Color Accuracy	76 CRI
L70 Lifespan	100,000 Hours
Lumens	7,334 lm
Efficacy	130

Technical Specifications

Compliance

UL Listed:
Suitable for wet locations

IESNA LM-79 & LM-80 Testing:
RAB LED luminaires and LED components have been tested by an independent laboratory in accordance with IESNA LM-79 and LM-80.

DLC Listed:
This product is listed by Design Lights Consortium (DLC) as an ultra-efficient premium product that qualifies for the highest tier of rebates from DLC Member Utilities. Designed to meet DLC 5.1 requirements.
DLC Product Code: P0000173B

Electrical

Driver:
Constant Current, Class 2, 120-277V, 50-60Hz, 120V: 0.51A, 208V: 0.33A, 240C: 0.29A, 277V: 0.24A

Dimming Driver:
Driver includes dimming control wiring for 0-10V dimming systems. Requires separate 0-10V DC dimming circuit. Dims down to 10%.

THD:
5.73% at 120V, 8.02% at 277V

Power Factor:
99.1% at 120V, 97.3% at 277V

Surge Protection:
6kV

Photocell:
120V Swivel photocell included. Photocell is only compatible with 120V.

Performance

Lifespan:
100,000-Hour LED lifespan based on IES LM-80 results and TM-21 calculations

Wattage Equivalency:
Equivalent to 250W Metal Halide

LED Characteristics

LEDs:
Two (2) multi-chip, high-output, long-life LEDs

Color Consistency:
3-step MacAdam Ellipse binning to achieve consistent fixture-to-fixture color

Color Stability:
LED color temperature is warrantied to shift no more than 200K in color temperature over a 5-year period

Color Uniformity:
RAB's range of Correlated Color Temperature follows the guidelines of the American National Standard for Specifications for the Chromaticity of Solid State Lighting (SSL) Products, ANSI C78.377-2017.

Construction

Ambient Temperature:
Suitable for use in up to 40°C (104°F)

Cold Weather Starting:
The minimum starting temperature is -40°C (-40°F)

Housing:
Precision die-cast aluminum housing, lens frame

Arm:
Die-cast aluminum with wiring access plate

Cutoff:
Cutoff (7.5°)

Reflector:
Specular vacuum-metallized polycarbonate

Gaskets:
High-temperature silicone

Lens:
Tempered glass

Copyright © 2025 RAB Lighting All Rights Reserved Note: Specifications are subject to change at any time without notice

Technical Specifications (continued)

Finish:
Formulated for high durability and long-lasting color

Green Technology:
Mercury and UV free. RoHS-compliant components.

Installation

Mounting:
Die-cast aluminum wall bracket with (5) 1/2" conduit openings with plugs. Two-piece bracket with tether for ease of installation and wiring.

Other

Warranty:
RAB warrants that our LED products will be free from defects in materials and workmanship for a period of five (5) years from the date of delivery to the end user, including coverage of light output, color stability, driver performance and fixture finish. RAB's warranty is subject to all terms and conditions found at rablighting.com/warranty.

Patents:
The WPLED design is protected by patents in the U.S. Pat D653,377, Canada Pat. 142252, China Pat. ZL201130356930.8, and Mexico Pat. 36921 and pending patent in TW.

Replacement:
Replaces 250W HID

Optical

BUG Rating:
B1 U0 G2

Dimensions

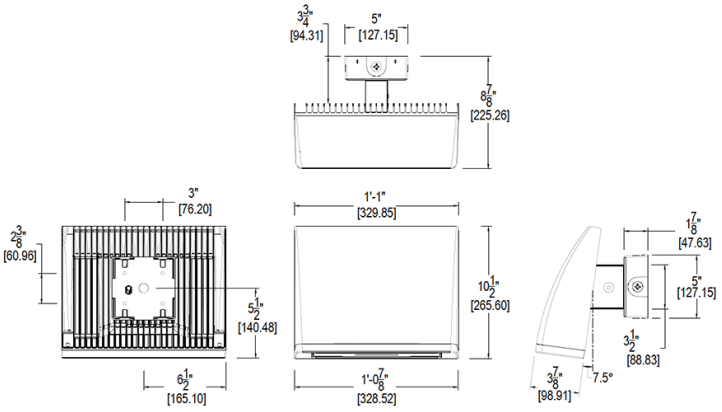

Features

- High performance LED light engine
- Maintains 70% of initial lumens at 100,000-hours
- Weatherproof high temperature silicone gaskets
- Superior heat sinking with die cast aluminum housing and external fins
- Replaces 250W MH
- Traditional wall pack look from the front
- 3 cutoff options
- 5-Year, No-Compromise Warranty

Copyright © 2025 RAB Lighting All Rights Reserved Note: Specifications are subject to change at any time without notice

Ordering Matrix

Family	Cutoff	Wattage	Color Temp	Finish	Driver Options	Options	Other Options
WPLED	C	52	N	W		/PCS	
	C = Cutoff (7.5 degrees) **FC =** Full Cutoff (0 degrees) **Blank =** Standard (15 degrees)	**52 =** 52W **80 =** 80W	**Blank =** 5000K Cool **N =** 4000K Neutral **Y =** 3000K Warm	**Blank =** Bronze **W =** White	**Blank =** 120-277V **/D10 =** 0-10V Dimming **/BL =** Bi-Level **/480 =** 480V	**Blank =** No Option **/PCS =** 120V Swivel Photocell **/PCS2 =** 277V Swivel Photocell **/PCS4 =** 480V Swivel Photocell **/LC =** Lightcloud	**Blank =** Standard **USA =** BAA Compliant

Copyright © 2025 RAB Lighting All Rights Reserved Note: Specifications are subject to change at any time without notice