XC



For weatherproof safety, this heavy duty die cast aluminum cover fits round boxes. Supplied with heavy foam rubber gasket and four #10-24 stainless steel screws.

Color: Natural

Weight: 0.3 lbs

Project:	**Type:**
Prepared By:	**Date:**

Technical Specifications

Compliance

UL Listed:
Suitable for wet locations

Construction

Covers:
Heavy duty die cast aluminum

Screws:
10-24 Brass Round Head Phillips/slotted

Gaskets:
1/8" thick closed cell silicone rubber for long lasting seal won't crumple or break

Diameter:
4"

Tap:
Blank

Other

Replacement Plugs:
Available for round and rectangular covers and boxes

Buy American Act Compliance:
RAB values USA manufacturing! Upon request, RAB may be able to manufacture this product to be compliant with the Buy American Act (BAA). Please contact customer service to request a quote for the product to be made BAA compliant.

Copyright © 2024 RAB Lighting All Rights Reserved Note: Specifications are subject to change at any time without notice

Dimensions

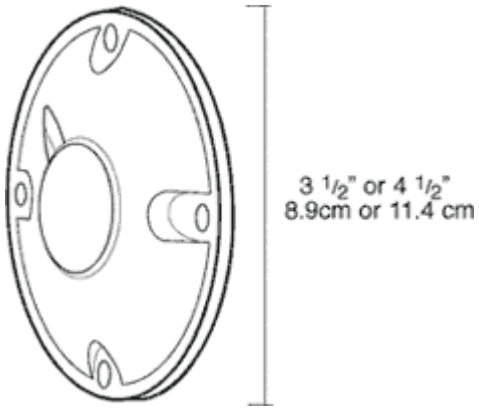

Features

- Stainless steel screws provided
- Die cast aluminum covers are color matched
- Close-up plugs allow Phillips or slotted screwdrivers for easy installation

Copyright © 2024 RAB Lighting All Rights Reserved Note: Specifications are subject to change at any time without notice