Browning®

TorqTaper® Plus Screw Conveyor Drive Installation Instructions

Emerson Industrial Automation
Power Transmission Solutions
7120 New Buffington Road
Florence, KY 41042
Application Engineering: 800 626 2093
www.emerson-ept.com

F O R M
9181
November 2009

⚠ WARNING

- Read and follow all instructions carefully.
- Disconnect and lock-out power before installation and maintenance. Working on or near energized equipment can result in severe injury or death.
- Do not operate equipment without guards in place. Exposed equipment can result in severe injury or death.

⚠ CAUTION

- Periodic inspections should be performed. Failure to perform proper maintenance can result in premature product failure and personal injury.

1. Screw Conveyor Drive Installation Instructions

A shaft mount reducer can be converted to a screw conveyor drive by installing a screw conveyor drive shaft and adapter as follows:

1.1 Screw Conveyor Drive Adapter and Shaft Installation Instructions Sizes 107 through 407

1.1.1 Remove the bushing ring, endcap and dirt cover from the hollow output shaft.

Note: The endcap and dirt cover may be discarded. Do not discard the bushing ring.

1.1.2 On the side opposite of the input shaft, place a straight blade screwdriver in the housing relief next to the metal shield of the “Barrier” sealing system. Tap the screwdriver blade into the side of the metal shield. Pry the metal shield out of the reducer. Refer to Figure 1-1.

Note: Do not drive the screwdriver into the metal shield more than 1/4”.

Note: The 407 does not include a metal shield. Do not remove the factory installed v-ring. Proceed to step 1.1.4.”

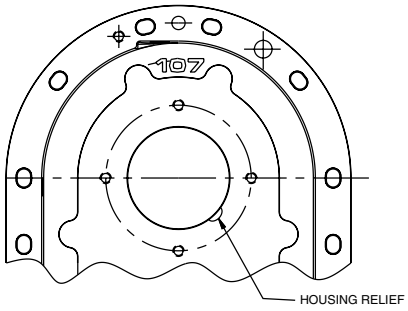

Figure 1-1
Metal Shield Removal Detail

1.1.3 Remove the v-ring from the metal shield. Discard the metal shield. Re-install the v-ring into the same location. When re-installed properly, the lip of the v-ring will contact the face of the oil seal.

1.1.4 Install the ring seal plate supplied with the adapter or optional seal cartridge in the screw conveyor adapter. See section 1.2 lip seal/ waste pack seal cartridge instructions or section 1.3 lip seal/packing gland seal cartridge instructions for optional sealing installation instructions.

1.1.5 Position screw conveyor adapter with the small pilot end toward the reducer and align the adapter bolt holes to the bolt holes in the housing face.

1.1.6 Install the capscrews supplied with the screw conveyor adapter kit. Tighten the capscrews to the recommended torque. See bolt torque specifications section 2.

Note: These capscrews have a coating near the end which will provide positive locking of the fastener.

1.1.7 Place shaft key (supplied with kit) in keyseat of screw conveyor drive shaft. Insert the drive shaft into the hollow output shaft of reducer, making sure the shaft key aligns with the keyway in the reducer.

1.1.8 On the input shaft side, thread the bushing ring onto the hollow quill one to two turns past the end of the quill.

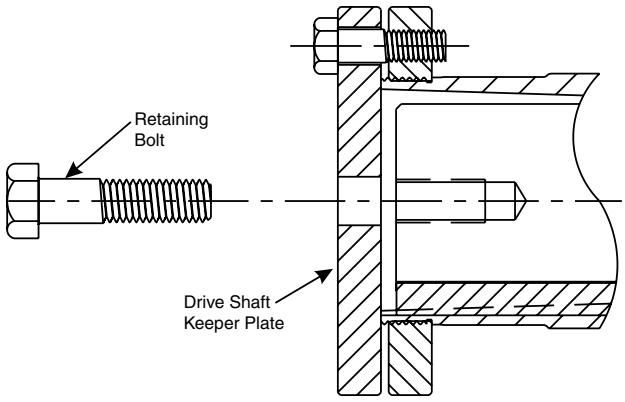

Figure 1-2
Drive Shaft Keeper Plate Installation
Sizes 107 through 407

Browning, Emerson, Emerson Industrial Automation and TorqTaper are trademarks of Emerson Electric Co. or one of its affiliated companies.
© 2008, 2009 Emerson Power Transmission, All Rights Reserved.
MCIM08047 • Form 9181 • Printed in USA

EMERSON™
Industrial Automation

1.1.9 On the input shaft side of the hollow output shaft, install drive shaft keeper plate and tighten the retaining bolt (supplied with kit) securely after applying thread lock compound to the retaining bolt's threads. Insert bolts through keeper plate and thread into bushing ring for future removal.

1.1.10 Attach the screw conveyor drive assembly to the trough end using the four (4) flat head capscrews, flat washers, lock washers and nuts supplied with the trough end. On 6 and 9-inch conveyors, install the trough end to the screw conveyor drive before mounting the trough end to the trough.

1.2 Lip Seal/Waste Pack Seal Cartridge Instructions

1.2.1 Install the lip seal (supplied) or the felt seal (optional) in the front chamber of the seal cartridge.

Note: Install the lip seal with the spring side of the seal toward the reducer.

1.2.2 Install seal cartridge into the screw conveyor adapter. Align the anti-rotation pin on the seal cartridge to the slot in the screw conveyor adapter.

1.2.3 Install seal protector over shaft even if the lip seal or the felt seal is not used.

1.2.4 Install o-ring in the groove provided on the seal cartridge housing. (Grease or sealant can be used to hold o-ring in place during installation to trough end.)

1.2.5 Proceed with step 1.1.5.

1.2.6 When step 1.1.8 has been completed, fill seal cartridge cavity with waste packing, if so desired.

Note: Waste packing not supplied.

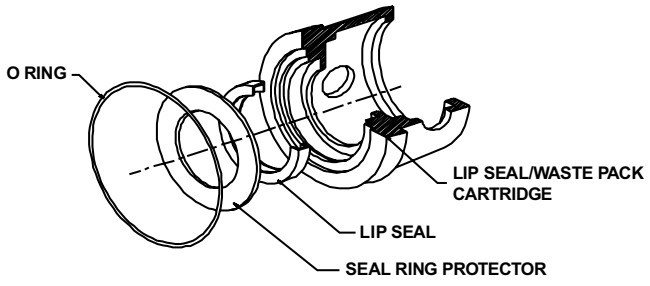

Figure 1-3
Lip Seal/Waste Pack Assembly

1.3 Lip Seal/Packing Gland Seal Cartridge Instructions

1.3.1 Assemble the packing gland piston and the packing gland cartridge with the bolts provided. The pilot of the packing gland piston fits inside the packing gland cartridge bore. Do not tighten the bolts at this time.

1.3.2 Install the packing gland piston and the packing gland cartridge assembly into the adapter housing. Align the anti-rotation pin on the packing gland cartridge to the slot in the adapter housing.

1.3.3 Install the lip seal (supplied) or the felt seal (optional) in the front chamber of the packing gland cartridge housing.

1.3.4 Wrap the packing gland material (supplied) around the seal diameter of the drive shaft and cut the packing to length. Two (2) pieces are required. See Figure 1-6.

Note: Install the lip seal with the spring side of the seal toward the reducer.

1.3.5 Install the o-ring in the groove provided on the seal cartridge housing. (Grease can be used to hold the o-ring in place during installation to the trough end.)

1.3.6 Install the front seal protector ring and proceed with step 1.1.5 of the screw conveyor drive installation instructions.

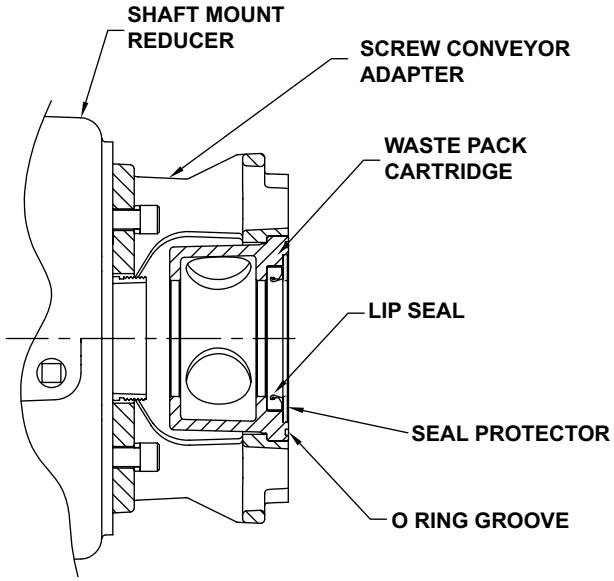

Figure 1-4
Waste Pack Assembly

1.3.7 When step 1.1.8 has been completed, remove the bolts in the packing gland piston cartridge assembly.

1.3.8 Install the two (2) cut-to-length packing materials on the shaft in the packing gland chamber of the seal cartridge housing.

1.3.9 Secure the packing gland piston to the seal cartridge housing with the supplied screws. Tighten screws lightly, allowing the packing to compress on the shaft. Do not over tighten the packing gland.

1.3.10 Under normal material handling operations, observe the packing gland for leakage. Should the packing gland show signs of leakage, shut the reducer drive assembly off and tighten the packing gland screws evenly to compress the packing material to the shaft. Do not over tighten packing gland. Repeat the above procedures until the leakage has been stopped.

Note: Over-tightening of the packing gland can cause excessive temperatures and premature shaft wear.

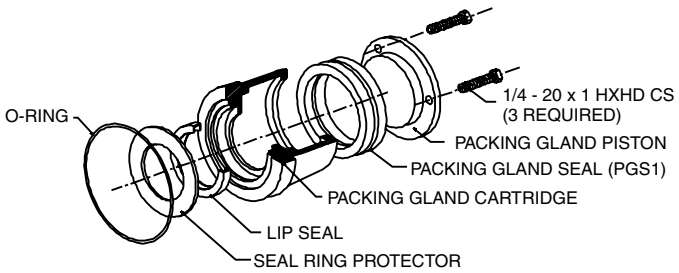

Figure 1-5
Packing Gland Assembly

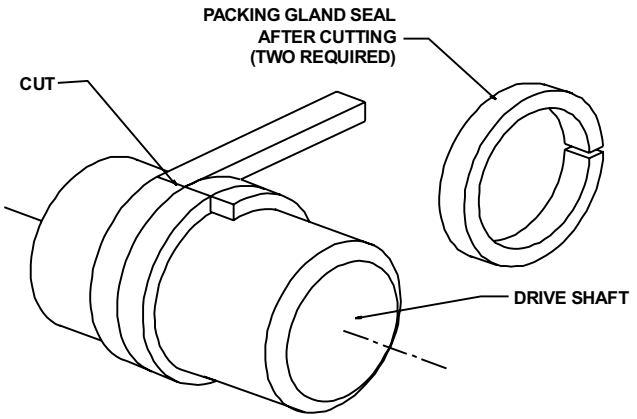

Figure 1-6
Packing Gland Assembly
Wrap the packing gland seal around the seal dia. of the drive shaft and cut as shown

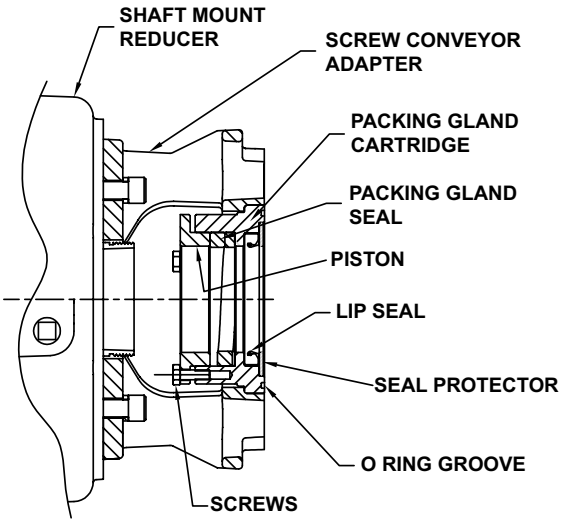

Figure 1-7
Packing Gland Assembly

2.0 Bolt Torque Specifications

Table 2-1 Bolt Tightening Torque

REDUCER SIZE	SCREW CONVEYOR ADAPTOR GRADE 8	
	BOLT SIZE	FT-LBS
107	5/16 - 18	23
115	3/8 - 16	41
203	7/16 - 14	65
207	1/2 - 13	99
215	1/2 - 13	99
307	5/8 - 11	200
315	5/8 - 11	200
407	5/8 - 11	200

Browning, Emerson, Emerson Industrial Automation and TorqTaper are trademarks of Emerson Electric Co. or one of its affiliated companies.
© 2008, 2009 Emerson Power Transmission, All Rights Reserved.
MCIM08047 • Form 9181 • Printed in USA

EMERSON™
Industrial Automation