Belt Guard

Belt guard assemblies consist of a guard kit and a mounting bracket kit as shown in the tables. Mounting bracket kit must be purchased separately. These belt guards may also be used with screw conveyor drives.

Belt guard standard color is yellow. Brackets supplied can accommodate fan kits when required.

Plated fasteners providing protection in outdoor applications are supplied with the guard assembly.

Belt guards have a hinged, removable cover.

Belt guards may be assembled with the belt drive already installed.

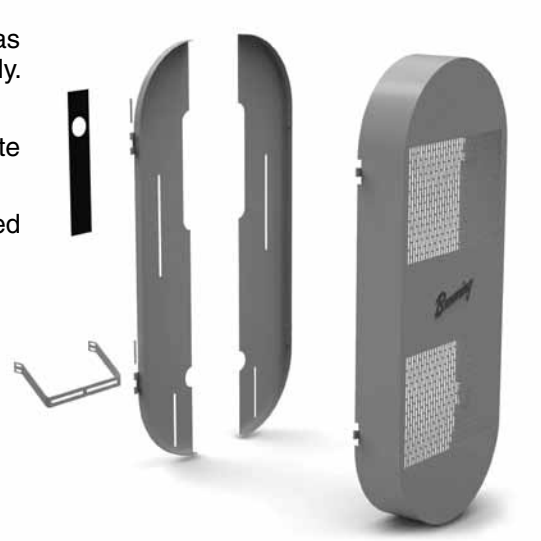

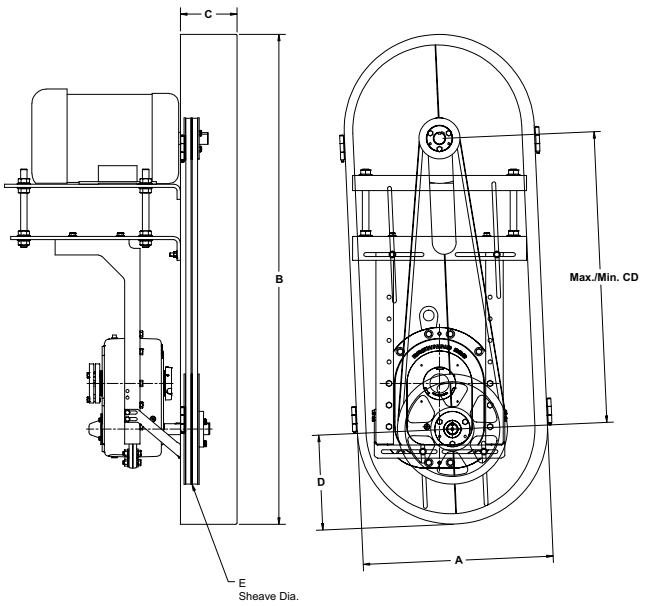

Top Mount

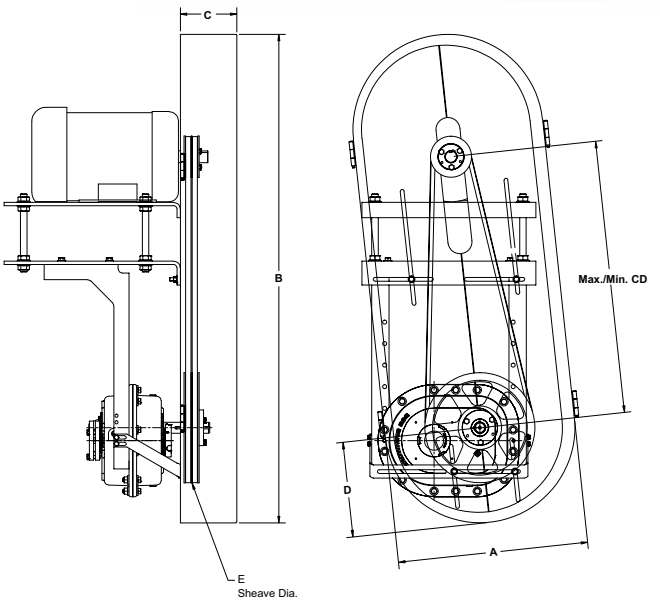

Side Mount

Dimensions in Inches

Belt Guard Kit No.	Center distance		A	B	C	D	E
	Min.	Max.					Max.
BGP10 13-20	13.00	20.00	11.00	31.50	6.50	5.50	10.00
BGP14 18-30	18.00	30.00	15.00	45.50	6.50	7.50	14.00
BGP20 22-34	22.00	34.00	21.00	55.50	6.50	10.50	20.00
BGP24 24-38	24.00	38.00	25.00	63.50	8.50	12.50	24.00
BGP28 32-48	32.00	48.00	29.00	77.50	8.50	14.50	28.00
BGP32 42-67	42.00	62.00	33.00	95.50	8.50	16.50	32.00

Top Mount		Side Mount	
Mounting Bracket Kit No.	Reducer Size	Mounting Bracket Kit No.	Reducer Size
107BGMKPT	107	107BGMKPS	107
115BGMKPT	115	115BGMKPS	115
203BGMKPT	203	203BGMKPS	203
207BGMKPT	207	207BGMKPS	207
215BGMKPT	215	215BGMKPS	215
307BGMKPT	307	307BGMKPS	307
315BGMKPT	315	315BGMKPS	315
407BGMKPT	407		
415BGMKPT	415		
507BGMKPT	507		
608BGMKPT	608		
800BGMKPT	800		