M-11709 | 1

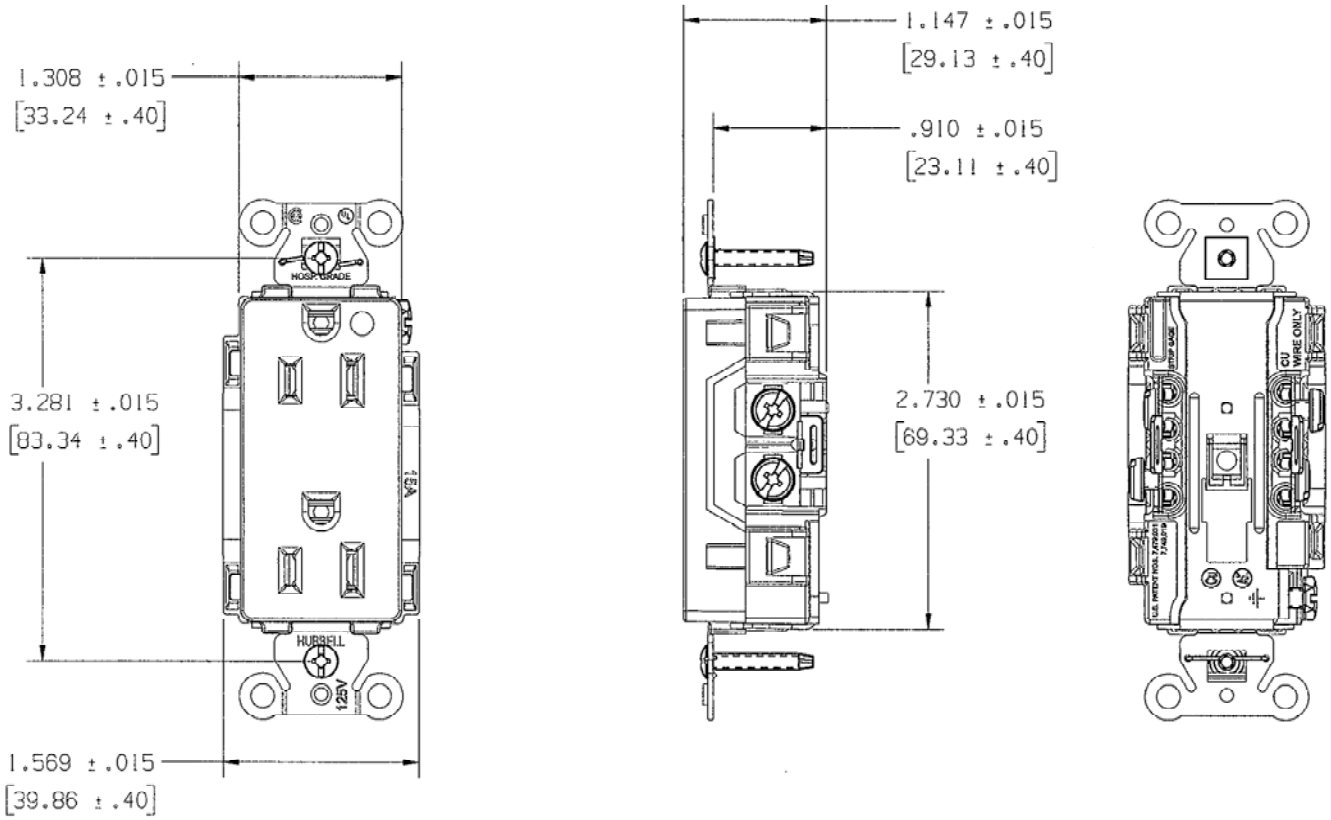

NOTES:
1) DIMENSIONS ARE IN INCHES [MM].
2) ALL DEVICES UL LISTED AND CSA CERTIFIED.
3) TERMINALS ACCOMMODATE #14-#10 AWG COPPER WIRE ONLY.

CATALOG NUMBERS											
	BROWN	IVORY	GRAY	WHITE	BLACK	ALMOND	LIGHT ALMOND	OFFICE WHITE	ORANGE	RED	BLUE
15A	2172	2172IV	2172GY	2172W	2172BK	2172ALM	2172LA	------	------	2172RED	------
20A	2182	2182IV	2182GY	2182W	2182BK	2182ALM	2182LA	------	------	2182RED	------

CODE 74545

LIST OF PARTS		
DESCRIPTION	MATERIAL	FINISH
TOP	NYLON 6/6	SPI A-3
BASE	NYLON 6/6	SPI A-3
LINE CONTACTS	BRASS	
GROUND CONTACTS	BRASS	
CONTACT SCREW (NEU)	STEEL	NI PLT
CONTACT SCREW (HOT)	STEEL	
BRIDGE	.04 GALV STL	
GROUND SCREW	STEEL	GREEN
STAPLE	S.S.	
WASHER	PVC FILM	BLACK
MOUNTING SCREW	STEEL	ZINC PLT

DIMENSION SHEET FOR CAT. NO.

REPAIRABLE ☐ NON-REPAIRABLE ☐

B

M-11709

1

SYM	REVISIONS	APP	DATE
1	RELEASED PER DCN #18840 WRV		05/08/12

THE DESIGN AND DIMENSIONS OF THE PRODUCT SHOWN ON THIS DRAWING ARE SUBJECT TO CHANGE WITHOUT NOTICE

TITLE
HOSPITAL GRADE DECORATOR RECEPTACLE
15A & 20A 125V, 2P3W
BACK & SIDE WIRE

TOLERANCES UNLESS OTHERWISE SPECIFIED
.XX = ±.01
.XXX = ±.005
ANGLES = ±2°

WIRING DEVICE-KELLEMS
HUBBELL INCORPORATED
SHELTON, CT

DR. BY WRV	APP. BY
TR. BY	SCALE 1:1
CHK. BY	DATE 5/2012