3-Bolt Flanged Bracket

CLFB 200 PTI Series

Normal Duty Bearing
Cast Iron Housing
Concentric Locking Collar
Metric and Inch Bores

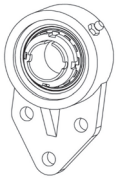

Models Available

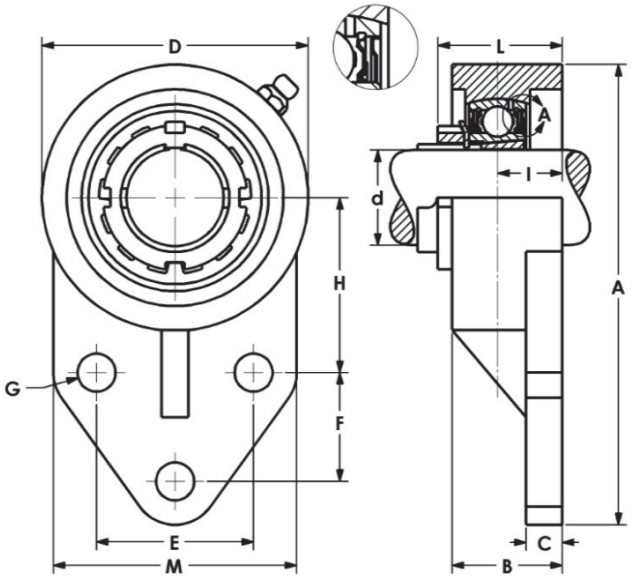



The locking collar provides for a concentric fit to the shaft

Part No.	Shaft Size d		Dimensions (mm) (in)											Bearing No.	Housing No.	Wt. kg
	mm	in	A	B	C	D	E	F	G	H	I	L	M			
CLFB204-20MM	20		108	25.5	8	64	38.1	22.2	10	43	16	35.8	60	CL204-20MM	FB204	0.7
CLFB204-12		3/4	4.25	1.0	0.31	2.52	1.500	0.875	0.40	1.688	0.63	1.41	2.36	CL204-12		
CLFB205-25MM	25		121	29	9.5	70	41.3	28.6	10	46	17	39.2	64	CL205-25MM	FB205	0.8
CLFB205-14		7/8	4.76	1.14	0.37	2.76	1.625	1.125	0.40	1.812	0.67	1.54	2.52	CL205-14		
CLFB205-15		15/16												CL205-15		
CLFB205-16		1												CL205-16		
CLFB206-30MM	30		137	32	9.5	83	47.6	31.8	10	52.4	19	42.8	70	CL206-30 MM	FB206	1.3
CLFB206-18		1-1/8	5.39	1.26	0.37	3.27	1.875	1.250	0.40	2.063	0.75	1.69	2.76	CL206-18		
CLFB206-19		1-3/16												CL206-19		
CLFB206-20		1-1/4												CL206-20		
CLFB207-35MM	35		156	37	13	95	50.8	31.8	10	60	21	48.0	83	CL207-35MM	FB207	1.7
CLFB207-20		1-1/4	6.14	1.46	0.51	3.74	2.000	1.250	0.40	2.375	0.83	1.89	3.27	CL207-20		
CLFB207-22		1-3/8												CL207-22		
CLFB207-23		1-7/16												CL207-23		
CLFB208-40MM	40		164	34	16	100	50	41	12	60	21	52.8	78	CL208-40MM	FB208	2.0
CLFB208-24		1-1/2	6.46	1.34	0.63	3.93	1.968	1.625	0.47	2.375	0.83	2.08	3.08	CL208-24		
CLFB209-45MM	45		174	34	18	106	54	43	12	65	21	52.8	80	CL209-45MM	FB209	2.3
CLFB209-26		1-5/8	6.85	1.34	0.71	4.17	2.125	1.688	0.47	2.563	0.83	2.08	3.15	CL209-26		
CLFB209-27		1-11/16												CL209-27		
CLFB209-28		1-3/4												CL209-28		
CLFB210-50MM	50		191	38	13	118	70	41.3	12	74.6	21	55.1	102	CL210-50MM	FB210	2.9
CLFB210-30		1-7/8	7.52	1.50	0.51	4.65	2.750	1.625	0.47	2.938	0.83	2.17	4.02	CL210-30		
CLFB210-31		1-15/16												CL210-31		
CLFB210-32		2												CL210-32		

Note: Other sizes available on request.