3-Bolt Flanged Bracket

FB 200 PTI Series

Normal Duty Bearing
Cast Iron Housing
Set Screw Lock
Metric and Inch Bores

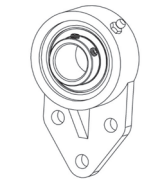

Models Available



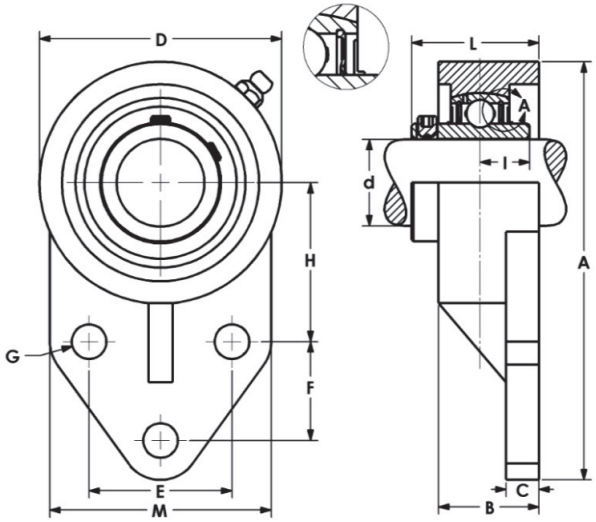

Part No.	Shaft Size d		Dimensions (mm) (in)											Bearing No.	Housing No.	Wt. kg
	mm	in	A	B	C	D	E	F	G	H	I	L	M			
FB201-12UMM	12		108	25.5	8	64	38.1	22.2	10	43	16	34.3	60	UC201-12MM		
FB202-15UMM	15													UC202-15MM		
FB203-17UMM	17													UC203-17MM	FB204	0.7
FB201-8U		1/2	4.25	1.0	0.31	2.52	1.500	0.875	0.40	1.688	0.63	1.35	2.36	UC201-8		
FB202-10U		5/8												UC202-10		
FB203-11U		11/16												UC203-11		
FB204-20UMM	20		108	25.5	8	64	38.1	22.2	10	43	16	34.3	60	UC204-20MM	FB204	0.7
FB204-12U		3/4	4.25	1.0	0.31	2.52	1.500	0.875	0.40	1.688	0.63	1.35	2.36	UC204-12		
FB205-25UMM	25		121	29	9.5	70	41.3	28.6	10	46	17	36.8	64	UC205-25MM		
FB205-14U		7/8	4.76	1.16	0.37	2.76	1.625	1.125	0.40	1.812	0.67	1.45	2.52	UC205-14	FB205	0.8
FB205-15U		15/16												UC205-15		
FB205-16U		1												UC205-16		
FB206-30UMM	30		137	32	9.5	83	47.6	31.8	10	52.4	19	41.2	70	UC206-30MM		
FB206-18U		1-1/8	5.39	1.26	0.37	3.27	1.875	1.250	0.40	2.063	0.75	1.62	2.76	UC206-18	FB206	1.3
FB206-19U		1-3/16												UC206-19		
FB206-20U		1-1/4												UC206-20		
FB207-35UMM	35		156	37	13	95	50.8	31.8	10	60	21	46.4	83	UC207-35MM		
FB207-20U		1-1/4	6.14	1.46	0.51	3.74	2.000	1.250	0.40	2.375	0.83	1.83	3.27	UC207-20	FB207	1.7
FB207-22U		1-3/8												UC207-22		
FB207-23U		1-7/16												UC207-23		
FB208-40UMM	40		164	34	16	100	50	41	12	60	21	51.2	78	UC208-40MM	FB208	2.0
FB208-24U		1-1/2	6.46	1.34	0.63	3.93	1.968	1.625	0.47	2.375	0.83	2.02	3.08	UC208-24		
FB209-45UMM	45		174	34	18	106	54	43	12	65	21	51.2	80	UC209-45MM		
FB209-26U		1-5/8	6.85	1.34	0.71	4.17	2.125	1.688	0.47	2.563	0.83	2.02	3.15	UC209-26	FB209	2.3
FB209-27U		1-11/16												UC209-27		
FB209-28U		1-3/4												UC209-28		
FB210-50UMM	50		191	38	13	118	70	41.3	12	74.6	21	53.6	102	UC210-50MM		
FB210-30U		1-7/8	7.52	1.50	0.51	4.65	2.750	1.625	0.47	2.938	0.83	2.11	4.02	UC210-30	FB210	2.9
FB210-31U		1-15/16												UC210-31		
FB210-32U		2												UC210-32		

Note: Eccentric Collar and Adapter Lock Bearings also available from stock.