Pillow Block Housings

SAF 600 Series

These Pillow Block Housings will accept self-aligning ball bearings (for high speed) or spherical roller bearings with adapter sleeves (for heavy load applications). They are available in Cast Iron (SAF) or Cast Steel (SAFS). SAF = 2 bolt base, FSAF = 4 bolt base, SAF 618 through SAF 638 only with 4 bolt base. SAF housings are supplied standard with triple labyrinth seals. End covers and taconite seals available on request. Each housing includes fixing rings (1 or 2). When removed, the units will accommodate shaft expansion.

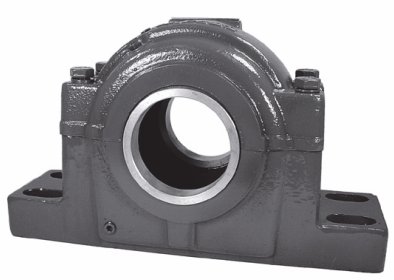

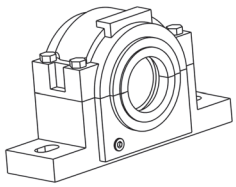

Models Available

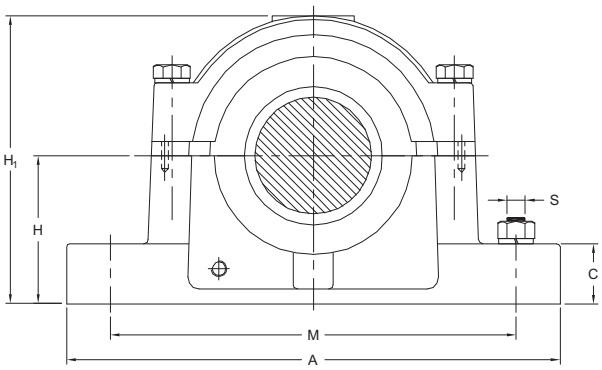

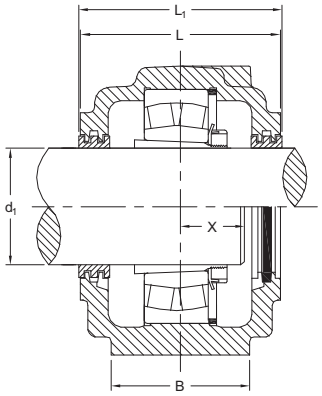

Dimensions in inches

Cast Part No. *	Shaft Size d_1	A	B	C	E	H	H_1	L	L_1	M Min	M Max	S Bolt	X	Housing Wt. lb
SAF 609	1-7/16	9.63	2.75	1.00	—	2.750	5.31	4.13	4.25	7.38	7.88	(2) 5/8	1.06	13.6
SAF 610	1-11/16	10.63	2.75	1.13	—	3.000	5.81	4.50	4.63	7.75	9.00	(2) 5/8	1.13	17.8
SAF 611	1-15/16	11.00	3.13	1.19	—	3.250	6.19	4.75	4.88	8.13	9.50	(2) 5/8	1.19	21.3
FSAF 611	1-15/16	11.00	3.13	1.19	2.00	3.250	6.19	4.75	4.88	8.13	9.50	(4) 1/2	1.19	21.3
SAF 613	2-3/16	13.00	3.50	1.25	—	3.500	6.94	5.25	5.38	9.63	11.00	(2) 3/4	1.38	30.2
FSAF 613	2-3/16	13.00	3.50	1.25	2.13	3.500	6.94	5.25	5.38	9.63	11.00	(4) 5/8	1.38	30.2
SAF 615	2-7/16	13.75	3.88	1.31	—	4.000	7.81	5.88	6.25	10.38	11.63	(2) 3/4	1.38	41.3
FSAF 615	2-7/16	13.75	3.88	1.31	2.13	4.000	7.81	5.88	6.25	10.38	11.63	(4) 5/8	1.38	41.3
SAF 616	2-11/16	14.25	3.88	1.31	—	4.250	8.25	6.13	6.50	10.63	12.63	(2) 3/4	1.38	48.0
FSAF 616	2-11/16	14.25	3.88	1.31	2.13	4.250	8.25	6.13	6.50	10.63	12.63	(4) 5/8	1.38	48.0
SAF 617	2-15/16	15.25	4.38	1.75	—	4.500	8.75	6.50	6.75	11.63	13.13	(2) 7/8	1.56	71.0
FSAF 617	2-15/16	15.25	4.38	1.75	2.38	4.500	8.75	6.50	6.75	11.63	13.13	(4) 3/4	1.56	71.0
SAF 618	3-3/16	15.50	4.38	2.00	2.25	4.750	9.19	6.63	6.88	12.00	13.50	(4) 3/4	2.16	76.0
SAF 620	3-7/16	16.50	4.75	2.13	2.75	5.250	10.25	7.13	7.38	13.25	14.50	(4) 3/4	2.44	98.0
SAF 622	3-15/16	18.38	5.13	2.38	3.25	6.000	11.50	7.75	8.00	14.63	16.00	(4) 7/8	2.59	125.0
SAF 624	4-3/16	21.25	6.25	2.50	3.75	6.313	12.50	8.13	8.38	17.00	18.25	(4) 1	2.75	166.0
SAF 626	4-7/16	22.00	6.25	2.63	3.75	6.689	13.31	8.50	8.75	17.38	19.25	(4) 1	2.94	193.0
SAF 628	4-15/16	24.75	6.75	2.75	4.25	7.063	14.19	9.25	9.38	19.38	21.63	(4) 1	3.16	244.0
SAF 630	5-3/16	26.75	7.13	3.00	4.63	7.500	14.88	9.63	9.75	20.88	23.63	(4) 1	3.41	271.0
SAF 632	5-7/16	28.00	7.50	3.13	4.50	7.875	15.69	10.50	10.63	21.63	24.38	(4) 1-1/4	3.59	280.0
SAF 634	5-15/16	29.50	8.00	3.38	5.00	8.250	16.50	11.00	11.25	22.50	25.00	(4) 1-1/4	3.75	345.0
SAF 636	6-7/16	31.25	8.25	3.50	5.25	8.875	17.75	11.25	11.38	24.00	26.63	(4) 1-1/4	3.90	375.0
SAF 638	6-15/16	32.75	8.75	3.75	5.25	9.500	18.63	11.75	12.00	24.75	27.88	(4) 1-1/2	4.06	480.0
SAF 640	7-3/16	34.25	9.00	4.00	5.50	9.875	20	11.87	12.06	26.25	29.50	(4) 1-1/2	4.25	500.0

Note: * Ductile SAF**D** and Steel SAF**S** housings available on request.

Pillow Block Housing Accessories

SAF 600 Series

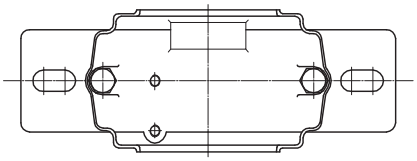

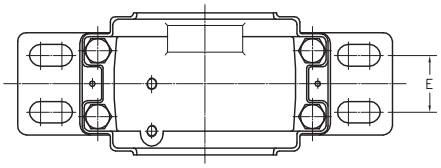



TER-OS Seal Option

Shaft Size	Housing Part No.	Bearing Part No.*	Basic Dynamic Rating C kN	Adapter Sleeves**		Seals		Fixing Rings		End Covers Part No.
				SNW Type Part No.	H Type Part No.	Standard Part No.	Optional Taconite Part No.	Part No.	Qty.	
1-7/16	SAF 609	1309K	38	SNW 09 x 1-7/16	H 309 x 1-7/16	LER 17	TER 17	FR100 x 10.5	2	EPR 03
		2309K	54	SNW 09 x 1-7/16	H 2309 x 1-7/16			FR100 x 10	1	
		21309K	100	SNW 09 x 1-7/16	H 309 x 1-7/16			FR100 x 10.5	2	
		22309K	135	SNW 109 x 1-7/16	H 2309 x 1-7/16			FR100 x 10	1	
1-11/16	SAF 610	1310K	41	SNW 10 x 1-11/16	H 310 x 1-11/16	LER 20	TER 20	FR110 x 11.5	2	EPR 04
		2310K	64.0	SNW 10 x 1-11/16	H 2310 x 1-11/16			FR110 x 10	1	
		21310K	120	SNW 10 x 1-11/16	H 310 x 1-11/16			FR110 x 11.5	2	
		22310K	175	SNW 110 x 1-11/16	H 2310 x 1-11/16			FR110 x 10	1	
1-15/16	SAF 611 FSAF 611	1311K	51	SNW 11 x 1-15/16	H 311 x 1-15/16	LER 24	TER 24	FR120 x 12	2	EPR 05
		2311K	75	SNW 11 x 1-15/16	H 2311 x 1-15/16			FR120 x 10	1	
		21311K	138	SNW 11 x 1-15/16	H 311 x 1-15/16			FR120 x 12	2	
		22311K	195	SNW 111 x 1-15/16	H 2311 x 1-15/16			FR120 x 10	1	
2-3/16	SAF 613 FSAF 613	1313K	62	SNW 13 x 2-3/16	H 313 x 2-3/16	LER 32	TER 32	FR140 x 12.5	2	EPR 06
		2313K	95	SNW 13 x 2-3/16	H 2313 x 2-3/16			FR140 x 10	1	
		21313K	184	SNW 13 x 2-3/16	H 313 x 2-3/16			FR140 x 12.5	2	
		22313K	250	SNW 113 x 2-3/16	H 2313 x 2-3/16			FR140 x 10	1	
2-7/16	SAF 615 FSAF 615	1315K	80	SNW 15 x 2-7/16	H 315 x 2-7/16	LER 37	TER 37	FR160 x 14	2	EPR 07
		2315K	122	SNW 15 x 2-7/16	H 2315 x 2-7/16			FR160 x 10	1	
		21315K	234	SNW 15 x 2-7/16	H 315 x 2-7/16			FR160 x 14	2	
		22315K	340	SNW 115 x 2-7/16	H 2315 x 2-7/16			FR160 x 10	1	
2-11/16	SAF 616 FSAF 616	1316K	88	SNW 16 x 2-11/16	H 316 x 2-11/16	LER 44	TER 44	FR170 x 14.5	2	EPR 08
		2316K	137	SNW 16 x 2-11/16	H 2316 x 2-11/16			FR170 x 10	1	
		21316K	255	SNW 16 x 2-11/16	H 316 x 2-11/16			FR170 x 14.5	2	
		22316K	370	SNW 116 x 2-11/16	H 2316 x 2-11/16			FR170 x 10	1	
2-15/16	SAF 617 FSAF 617	1317K	98	SNW 17 x 2-15/16	H 317 x 2-15/16	LER 184	TER 184	FR180 x 14.5	2	EPR 10
		2317K	140	SNW 17 x 2-15/16	H 2317 x 2-15/16			FR180 x 10	1	
		21317K	290	SNW 17 x 2-15/16	H 317 x 2-15/16			FR180 x 14.5	2	
		22317K	420	SNW 117 x 2-15/16	H 2317 x 2-15/16			FR180 x 10	1	
3-3/16	SAF 618	1318K	180	SNW 18 x 3-3/16	H 318 x 3-3/16	LER 188	TER 188	FR190 x 11.5	2	EPR 11
		2318K	153	SNW 18 x 3-3/16	H 2318 x 3-3/16			FR190 x 10	1	
		21318K	320	SNW 18 x 3-3/16	H 318 x 3/16			FR190 x 11.5	2	
		22318K	475	SNW 118 x 3-3/16	H 2318 x 3-3/16			FR190 x 10	1	
3-7/16	SAF 620	1320K	143	SNW 20 x 3-7/16	H 320 x 3-7/16	LER 102	TER 102	FR215 x 18	2	EPR 12
		2320K	190	SNW 20 x 3-7/16	H 2320 x 3-7/16			FR215 x 10	1	
		21320K	380	SNW 20 x 3-7/16	H 320 x 3-7/16			FR215 x 18	2	
		22320K	600	SNW 120 x 3-7/16	H 2320 x 3-7/16			FR215 x 10	1	
3-15/16	SAF 622	1322K	160	SNW 22 x 3-15/16	H 322 x 3-15/16	LER109	TER 109	FR240 x 20	2	EPR 13
		21322K	460	SNW 22 x 3-15/16	H 322 x 3-15/16			FR240 x 20	2	
		22322K	720	SNW 122 x 3-15/16	H 2322 x 3-15/16			FR240 x 10	1	
4-3/16	SAF 624	**22324K**	840	SNW 124 x 4-3/16	H 2324 x 4-3/16	LER 113	TER 113	FR260 x 10	1	EPR 14
4-7/16	SAF 626	**22326K**	970	SNW 126 x 4-7/16	H 2326 x 4-7/16	LER 117	TER 117	FR280 x 10	1	EPR 15
4-15/16	SAF 628	**22328K**	1120	SNW 128 x 4-15/16	H 2328 x 4-15/16	LER 122	TER 122	FR300 x 10	1	EPR 27
5-3/16	SAF 630	**22330K**	1250	SNW 130 x 5-3/16	H 2330 x 5-3/16	LER 125	TER 125	FR320 x 10	1	EPR 16
5-7/16	SAF 632	**22332K**	1375	SNW 132 x 5-7/16	H 2332 x 5-7/16	LER 130	TER 130	FR340 x 10	1	EPR 16
5-15/16	SAF 634	**22334K**	1540	SNW 134 x 5-15/16	H 2334 x 5-15/16	LER 140	TER 140	FR360 x 10	1	EPR 18
6-7/16	SAF 636	**22336K**	1725	SNW 136 x 6-7/16	H 2336 x 6-7/16	LER 148	TER 148	FR380 x 10	1	EPR 19
6-15/16	SAF 638	**22338K**	1860	SNW 138 x 6-15/16	H 2338 x 6-15/16	LER 155	TER 155	FR400 x 10	1	EPR 20
7-3/16	SAF 640	**22340K**	2010	SNW 140 x 7-3/16	H 2340 x 7-3/16	LER 159	—	FR420 x 10	1	EPR 21

Note: * Popular bearing in bold. ** Select either adapter. Complete bearing part no. will be 22320K C3 W33 where K indicates a taper bore (for adapters), C3 is the internal clearance and W33 is the lube groove on the O.D.