Pillow Block Housings

SDAF 200 Series

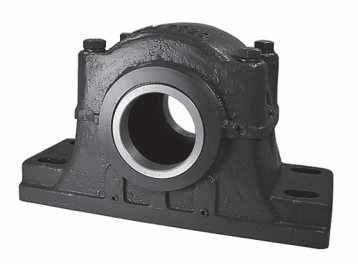

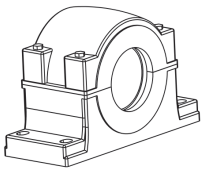

Models Available

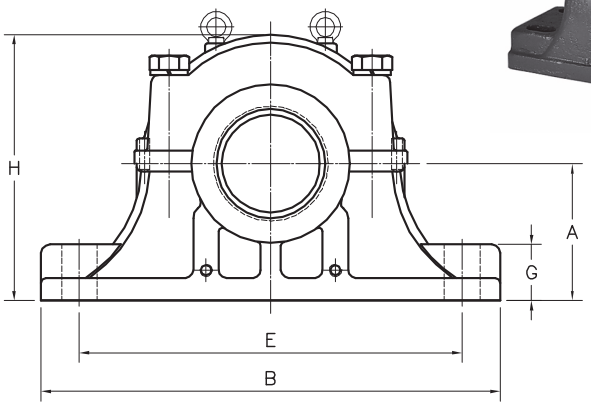

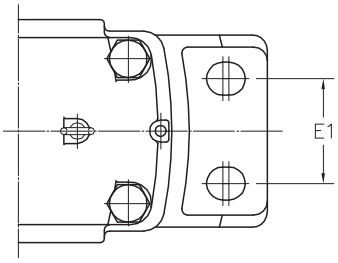

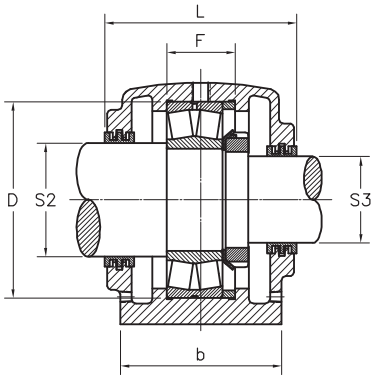

SDAF 200 - Housing Dimensions

Dimensions in inches

Housing No.	A	B	b	D	E		E1	F	G	H	L	Bolts	Housing Wt.
				mm	Min	Max		mm				(No. Req'd)	lb
SDAF 220	4.500	15.25	6.00	180	11.63	13.12	3.38	55.8	1.88	8.94	6.75	(4) 3/4	69
SDAF 222	4.937	16.50	6.75	200	12.63	14.50	4.00	62.8	2.12	9.88	7.25	(4) 1-7/8	100
SDAF 224	5.250	16.50	6.88	215	13.25	14.50	4.12	67.8	2.25	10.50	7.38	(4) 7/8	106
SDAF 226	6.000	18.38	7.50	230	14.63	16.00	4.50	73.8	2.38	11.88	8.00	(4) 1	147
SDAF 228	6.000	20.12	7.50	250	16.00	17.12	4.50	77.8	2.38	12.06	7.94	(4) 1	141
SDAF 230	6.312	21.25	7.88	270	17.00	18.25	4.75	82.8	2.50	12.81	8.38	(4) 1-1/8	157
SDAF 232	6.687	22.00	8.25	290	17.38	19.25	5.00	89.8	2.50	13.69	8.75	(4) 1-1/8	188
SDAF 234	7.062	24.75	9.00	310	19.38	21.63	5.50	95.8	2.50	14.25	9.63	(4) 1-1/4	212
SDAF 236	7.500	26.75	9.38	320	20.88	23.63	5.88	95.8	2.75	15.19	10.00	(4) 1-1/4	276
SDAF 238	7.875	27.63	10.00	340	21.50	23.50	6.25	101.8	3.00	16.25	10.63	(4) 1-3/8	338
SDAF 240	8.250	28.75	10.50	360	23.00	25.00	5.75	107.8	3.25	17.12	11.12	(4) 1-3/8	344
SDAF 244	9.500	32.00	11.25	400	25.63	27.88	7.25	117.8	3.50	19.25	11.88	(4) 1-1/2	520

SDAF 222 - Pillow Block Part Number

Shaft Dia.		Complete Pillow Block	Pillow Block Housing Only	Bearing Part No.	Basic Dynamic Load Rating	Locknut Part No.	Lockwasher Part No.	Labyrinth Seal Ring Part No.		Fixing Ring (1 Required)	End Cover (optional)
S-2 in	S-3 in	Part No.	Part No.	*	C kN			S-2 in	S-3 in	Part No.	Part No.
4-1/2	3-13/16	SDAF 22220	SDAF 220	22220	310	AN 20	W 20	LER 205	LER 87	FR180 x 10	EPR 12
4-7/8	4-3/16	SDAF 22222	SDAF 222	22222	405	AN 22	W 22	LER 121	LER 113	FR200 x 10	EPR 14
5-5/16	4-9/16	SDAF 22224	SDAF 224	22224	465	AN 24	W 24	LER 127	LER 119	FR215 x 10	EPR 15
5-7/8	4-15/16	SDAF 22226	SDAF 226	22226	545	AN 26	W 26	LER 136	LER 122	FR230 x 10	EPR 27
6-1/4	5-5/16	SDAF 22228	SDAF 228	22228	605	AN 28	W 28	LER 144	LER 127	FR250 x 10	EPR 16
6-5/8	5-3/4	SDAF 22230	SDAF 230	22230	730	AN 30	W 30	LER 151	LER 134	FR270 x 10	EPR 17
7	6-1/16	SDAF 22232	SDAF 232	22232	860	AN 32	W 32	LER 156	LER 142	FR290 x 10	EPR 18
7-7/16	6-7/16	SDAF 22234	SDAF 234	22234	975	AN 34	W 34	LER 161	LER 148	FR310 x 10	EPR 19
7-13/16	6-7/8	SDAF 22236	SDAF 236	22236	1000	AN 36	W 36	LER 165	LER 154	FR310 x 10	EPR 20
8-3/8	7-1/4	SDAF 22238	SDAF 238	22238	1100	AN 38	W 38	LER 240	LER 229	FR340 x 10	EPR 22
8-3/4	7-5/8	SDAF 22240	SDAF 240	22240	1250	AN 40	W 40	LER 244	LER 233	FR360 x 10	EPR 23
9-9/16	8-5/16	SDAF 22244	SDAF 244	22244	1500	AN 44	W 44	LER 248	LER 239	FR400 x 10	EPR 25

Note: * Typical suffix to the bearing part number is C3W33 where C3 is the internal clearance and W33 indicates a lube groove on the bearing O.D. For example specify 22220 C3W33. Other bearing clearance available upon request. Seals and Fixing Ring included with Pillow Block Housing.