## Series GW60

| SERIES | INPUT RPM | RATIO | OUTPUT RPM | MECH. INPUT HP | CONVENTIONAL OIL | | PAO SYNTHETIC OIL | | PAG SYNTHETIC OIL | |
|---|---|---|---|---|---|---|---|---|---|---|
| | | | | | EFF. % | MECH. OUTPUT TORQUE | EFF. % | MECH. OUTPUT TORQUE | EFF. % | MECH. OUTPUT TORQUE |
| GW60 | 1750 | 5 | 341.5 | 35.1 | 96.0 | 6068 | 96.9 | 6129 | 97.9 | 6189 |
| | | 7.5 | 236.5 | 29.9 | 95.1 | 7704 | 96.5 | 7820 | 97.5 | 7897 |
| | | 10 | 179.5 | 24.9 | 94.0 | 8467 | 96.4 | 8679 | 97.3 | 8763 |
| | | 15 | 119.3 | 19.2 | 91.5 | 9515 | 93.8 | 9753 | 95.2 | 9896 |
| | | 20 | 85.4 | 15.7 | 89.5 | 10127 | 91.7 | 10380 | 93.5 | 10583 |
| | | 25 | 71.4 | 13.0 | 87.1 | 10245 | 89.3 | 10501 | 91.0 | 10706 |
| | | 30 | 59.3 | 11.1 | 84.8 | 10249 | 86.9 | 10505 | 88.6 | 10710 |
| | | 40 | 43.8 | 8.72 | 81.2 | 10203 | 83.2 | 10458 | 84.8 | 10662 |
| | | 50 | 35 | 7.24 | 77.2 | 10079 | 79.2 | 10331 | 80.7 | 10533 |
| | | 60 | 29.2 | 6.15 | 73.7 | 9808 | 75.6 | 10053 | 77.1 | 10249 |
| | | 80 | 21.9 | 3.70 | 68.1 | 7264 | 69.8 | 7446 | 71.1 | 7591 |
| | | 100 | 17.5 | 2.57 | 63.5 | 5886 | 65.1 | 6033 | 66.4 | 6151 |
| | 1170 | 5 | 228.3 | 29.9 | 95.8 | 7726 | 96.7 | 7803 | 97.7 | 7881 |
| | | 7.5 | 158.1 | 25.4 | 94.8 | 9740 | 96.3 | 9886 | 97.2 | 9984 |
| | | 10 | 120 | 21.1 | 93.7 | 10687 | 96.0 | 10954 | 97.0 | 11061 |
| | | 15 | 79.8 | 16.3 | 91.1 | 11996 | 93.3 | 12296 | 94.7 | 12476 |
| | | 20 | 57.1 | 13.3 | 88.8 | 12758 | 91.1 | 13077 | 92.8 | 13332 |
| | | 25 | 47.8 | 11.0 | 86.3 | 12903 | 88.5 | 13226 | 90.2 | 13484 |
| | | 30 | 39.7 | 9.50 | 84.0 | 12911 | 86.1 | 13234 | 87.8 | 13492 |
| | | 40 | 29.3 | 7.43 | 80.2 | 12848 | 82.2 | 13169 | 83.8 | 13426 |
| | | 50 | 23.4 | 6.18 | 76.1 | 12691 | 78.0 | 13008 | 79.5 | 13262 |
| | | 60 | 19.5 | 5.26 | 72.5 | 12352 | 74.3 | 12661 | 75.8 | 12908 |
| | | 80 | 14.6 | 3.31 | 64.0 | 9142 | 65.6 | 9371 | 66.8 | 9553 |
| | | 100 | 11.7 | 2.32 | 59.2 | 7408 | 60.7 | 7593 | 61.9 | 7741 |
| | 100 | 5 | 19.5 | 6.20 | 89.9 | 17587 | 90.8 | 17763 | 91.7 | 17939 |
| | | 7.5 | 13.5 | 5.01 | 87.1 | 20662 | 88.4 | 20972 | 89.2 | 21179 |
| | | 10 | 10.3 | 4.19 | 84.3 | 22324 | 86.4 | 22882 | 87.3 | 23105 |
| | | 15 | 6.8 | 3.33 | 78.6 | 24797 | 80.5 | 25417 | 81.7 | 25789 |
| | | 20 | 4.9 | 2.80 | 74.0 | 26194 | 75.9 | 26849 | 77.4 | 27373 |
| | | 25 | 4.1 | 2.41 | 69.4 | 26436 | 71.1 | 27097 | 72.5 | 27626 |
| | | 30 | 3.4 | 2.14 | 65.3 | 26480 | 66.9 | 27142 | 68.2 | 27672 |
| | | 40 | 2.5 | 1.76 | 59.1 | 26260 | 60.6 | 26917 | 61.8 | 27442 |
| | | 50 | 2 | 1.54 | 53.3 | 25925 | 54.6 | 26573 | 55.7 | 27092 |
| | | 60 | 1.7 | 1.37 | 48.6 | 25283 | 49.8 | 25915 | 50.8 | 26421 |
| | | 80 | 1.3 | 0.95 | 40.2 | 19249 | 41.2 | 19730 | 42.0 | 20115 |
| | | 100 | 1 | 0.68 | 35.5 | 15389 | 36.4 | 15774 | 37.1 | 16082 |

**OVERHUNG LOAD AND THRUST LOAD INFORMATION**

NOTE: ALL TORQUE VALUES LISTED IN INCH-POUNDS, ALL OVERHUNG LOAD VALUES LISTED IN POUNDS. THE POINT OF APPLICATION OF THE OVERHUNG LOAD IS CONSIDERED TO BE ONE SHAFT DIAMETER MEASURED OUTWARD FROM THE GEAR CASE HOUSING. AT SPEEDS ABOVE 1750 RPM, UNITS MAY BECOME THERMALLY LIMITED. FOR EXTENDED OPERATION, LIMIT INPUT HP TO 1750 RPM CATALOG RATING.

| Thrust and Overhung Load Ratings (Lbs.) | GW60 |
|---|---|
| Thrust Load Ratings (Low Speed Shaft, All Ratios) | 3990 |
| Overhung Load Capacity* (High Speed Shaft, All Ratios) | 450 |
| Overhung Load Capacity* (Low Speed Shaft, All Ratios) | 3723 |
| Overhung Load Capacity** (Extended Brg Design Output Shaft, All Ratios) | 2245 |

* OHL AND THRUST VALUES SHOWN ARE INDEPENDENT FUNCTIONS AND CANNOT BE APPLIED SIMULTANEOUSLY. REFER APPLICATIONS WITH COMBINED OHL AND THRUST TO HUB CITY CUSTOMER SERVICE DEPARTMENT.
* THE POINT OF APPLICATION OF THE OVERHUNG LOAD IS CONSIDERED TO BE ONE SHAFT DIAMETER MEASURED OUTWARD FROM THE GEARCASE HOUSING.
** LOAD LOCATED AT END OF OUTPUT SHAFT.
ADDITIONAL RATINGS FOR OTHER INPUT SPEEDS ARE AVAILABLE AT WWW.REGALBELOIT.COM

OUTPUT TORQUE VALUES SHOWN ARE INCH-POUNDS (IN-LB).

# Hub City™ Worm Gear Drives

## Single Reduction

## Models

307, 327, 387, 427, 457, 527, GW607, GW707, GW807, GW1007

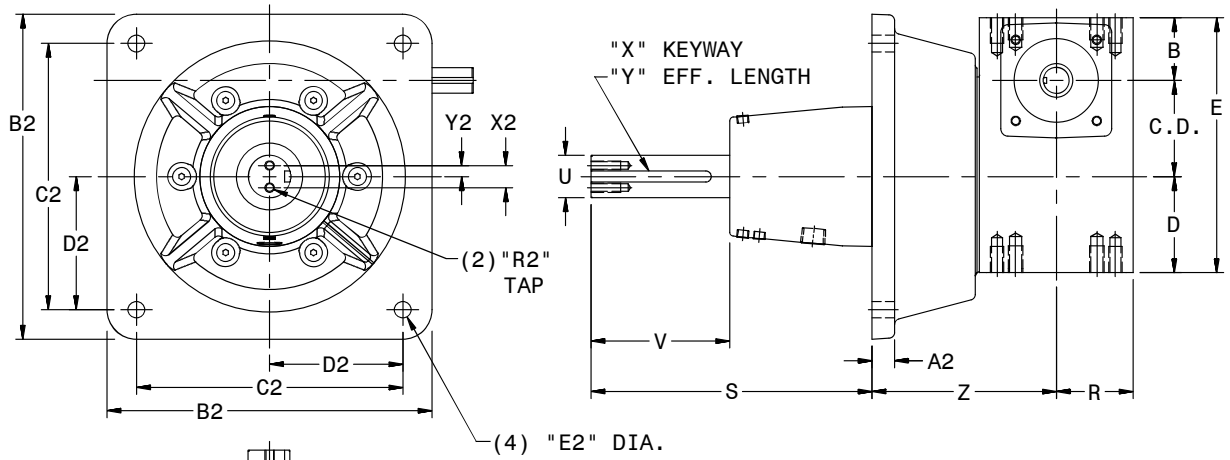


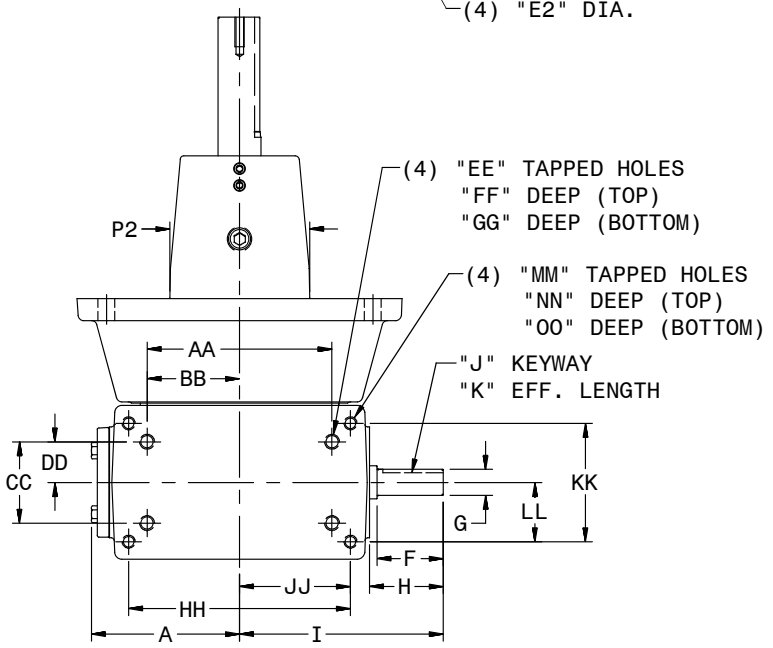


ALL GW MODELS ARE FAN COOLED
REFER TO FAN DETAILS ON NEXT PAGE.

FOR LUBRICATION AND INSTALLATION INSTRUCTIONS - REFER TO SECTION M

DIMENSIONS SHOWN ARE FOR REFERENCE ONLY.
DOWNLOAD AVAILABLE CAD MODELS AT:
WWW.HUBCITYINC.COM

### Standard Styles Available

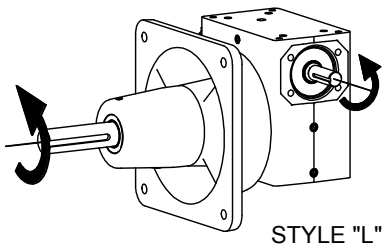

STYLE "L"

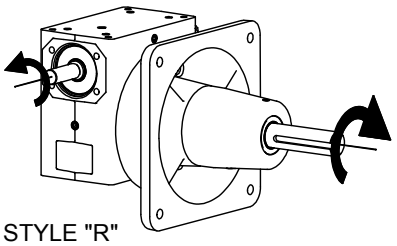

STYLE "R"

CONSULT FACTORY FOR VERTICAL SHAFT LUBRICATION RECOMMENDATIONS.
INPUT SHAFT CAN BE ROTATED IN EITHER DIRECTION.



CALL: (605) 225-0360 • FAX: (605) 225-0567

### 307, 327, 387, 427, 457, 527, GW607, GW707, GW807, GW1007

| MODEL | C.D. | A | B | D | E | F | G | H | I | J | K | R |
|---|---|---|---|---|---|---|---|---|---|---|---|---|
| 307 | 3.001 | 4.84 | 2.624 | 3.250 | 8.875 | 2.38 | .875/.8735 | 2.38 | 6.57 | 3/16 X 3/32 P&W | 1.75 | 3.15 |
| 327 | 3.251 | 5.28 | 2.124 | 3.250 | 8.625 | N/A | .875/.8735 | 2.38 | 6.75 | 3/16 X 3/32 P&W | 1.75 | 2.60 |
| 387 | 3.751 | 4.90 | 2.374 | 3.937 | 10.062 | 2.20 | 1.000/.999 | 2.48 | 7.38 | 1/4 X 1/8 P&W | 1.91 | 2.81 |
| 427 | 4.251 | 6.10 | 2.686 | 4.438 | 11.375 | 3.47 | 1.250/1.2485 | 3.47 | 9.60 | 1/4 X 1/8 P&W | 2.87 | 3.62 |
| 457 | 4.501 | 5.23 | 2.499 | 4.625 | 11.625 | 2.98 | 1.125/1.124 | 3.21 | 8.44 | 1/4 X 1/8 | 2.50 | 2.32 |
| 527 | 5.168 | 5.98 | 2.624 | 5.375 | 13.167 | N/A | 1.250/1.249 | 3.27 | 9.25 | 1/4 X 1/8 | 2.63 | 2.53 |
| GW607 | 6.000 | N/A | 4.000 | 6.500 | 16.500 | N/A | 1.500 | 3.41 | 11.78 | 3/8 X 3/16 | 3.00 | 5.28 |
| GW707 | 7.000 | N/A | 4.320 | 7.590 | 18.910 | N/A | 1.625 | 2.98 | 11.50 | 3/8 X 3/16 P&W | 2.87 | 6.06 |
| GW807 | 8.000 | N/A | 4.100 | 8.860 | 20.960 | N/A | 1.875 | 2.84 | 12.50 | 1/2 X 1/4 P&W | 2.81 | 6.22 |
| GW1007 | 10.000 | N/A | 5.110 | 10.360 | 25.470 | N/A | 2.250 | 3.76 | 15.50 | 1/2 X 1/4 P&W | 3.69 | 7.94 |

| MODEL | OUTPUT FLANGE | S | U | V | X | Y | Z |
|---|---|---|---|---|---|---|---|
| 307 | STD | 9.78 | 1.438/1.4365 | 4.96 | 3/8 X 3/16 | 3.88 | 4.60 |
| 327 | STD | 9.50 | 1.4375/1.4365 | 4.68 | 3/8 X 3/16 | 3.87 | 6.22 |
| | LARGE ** | 9.50 | 1.625/1.624 | 4.63 | 3/8 X 3/16 | 3.69 | 6.37 |
| 387 | STD | 9.50 | 1.625/1.624 | 4.63 | 3/8 X 3/16 | 3.69 | 6.58 |
| | LARGE ** | 10.49 | 1.6875/1.6865 | 5.49 | 3/8 X 3/16 | 4.69 | 6.18 |
| 427 | STD | 10.76 | 1.688/1.6865 | 5.91 | 3/8 X 3/16 | 4.68 | 5.74 |
| 457 | STD | 10.50 | 1.6875/1.6865 | 5.50 | 3/8 X 3/16 | 4.69 | 6.00 |
| 527 | STD | 10.50 | 2.1875/2.1865 | 5.53 | 1/2 X 1/4 | 4.63 | 6.25 |
| 607 | STD | 15.50 | 2.4375/2.4367 | 7.62 | 5/8 X 5/16 | 6.50 | 8.25 |
| GW707 | STD | 15.50 | 2.937 | 7.63 | 3/4 X 3/8 | 6.44 | 8.50 |
| GW807 | STD | 17.06 | 3.438 | 9.25 | 7/8 X 7/16 | 8.00 | 10.00 |
| GW1007 | STD | 17.00 | 3.938 | 9.43 | 1 X 1/2 | 7.75 | 12.50 |

| MODEL | OUTPUT FLANGE | A2 | B2 | C2 | D2 | E2 | P2 | R2 | X2 | Y2 | WT. LBS. |
|---|---|---|---|---|---|---|---|---|---|---|---|
| 307 | STD | 0.78 | 11.00 | 9.000 | 4.500 | 9/16 | 5.12 | 5/16 NC X 1.00 DP | 0.75 | 0.38 | 107 |
| 327 | STD | 0.75 | 11.00 | 9.000 | 4.500 | 9/16 | 4.75 | 5/16 NC X 1.00 DP | 0.75 | 0.38 | 107 |
| | LARGE ** | 0.94 | 12.50 | 10.500 | 5.250 | 9/16 | 4.94 | 5/16 NC X 1.00 DP | 0.75 | 0.38 | |
| 387 | STD | 0.94 | 12.50 | 10.500 | 5.250 | 9/16 | 4.94 | 5/16 NC X 1.00 DP | 0.75 | 0.38 | 136 |
| | LARGE ** | 1.07 | 14.00 | 12.000 | 6.000 | 11/16 | 5.52 | 3/8 NC X 1.00 DP | 1.00 | 0.50 | |
| 427 | STD | 1.00 | 14.00 | 12.000 | 6.000 | 11/16 | 6.75 | 3/8 NC X 1.00 DP | 1.00 | 0.50 | 176 |
| 457 | STD | 0.81 | 14.00 | 12.000 | 6.000 | 11/16 | 5.50 | 3/8 NC X 1.00 DP | 1.00 | 0.50 | 176 |
| 527 | STD | 0.84 | 16.00 | 14.000 | 7.000 | 13/16 | 6.63 | 3/8 NC X 1.00 DP | 1.50 | 0.75 | 224 |
| 607 | STD | 1.25 | 19.50 | 17.000 | 8.500 | 15/16 | 8.50 | 3/8 NC X 1.00 DP | 1.50 | 0.75 | 363 |
| GW707 | STD | 1.75 | 22.00 | 19.000 | 9.500 | 1 1/8 | 10.75 | 3/8 NC X 1.00 DP | 2.00 | 1.00 | 560 |
| GW807 | STD | 2.00 | 28.00 | 24.000 | 12.000 | 1 5/16 | 13.75 | 5/8 NC X 1.50 DP | 2.12 | 1.06 | 780 |
| GW1007 | STD | 2.25 | 32.00 | 28.000 | 14.000 | 1 5/16 | 17.00 | 5/8 NC X 1.50 DP | 2.38 | 1.19 | 1180 |

** LARGE FLANGE AVAILABLE AS MODIFIED STANDARD. CONSULT FACTORY.

| MODEL | AA | BB | CC | DD | EE | FF | GG | HH | JJ | KK | LL | MM | NN | OO |
|---|---|---|---|---|---|---|---|---|---|---|---|---|---|---|
| 307 | 7.000 | 3.500 | 4.000 | 2.000 | 7/16 UNC | 0.88 | 0.88 | N/A | N/A | N/A | N/A | N/A | N/A | N/A |
| 327 | 6.250 | 3.125 | 2.750 | 1.375 | 1/2 UNC | 0.75 | 0.75 | 7.500 | 3.750 | 4.000 | 2.000 | 7/16 UNC | 0.88 | 0.88 |
| 387 | 6.875 | 3.438 | 3.000 | 1.500 | 1/2 UNC | 0.94 | 1.00 | 8.500 | 4.250 | 4.750 | 2.375 | 1/2 UNC | 1.00 | 1.00 |
| 427 | 8.500 | 4.250 | 5.000 | 2.500 | 5/8 UNC | 1.00 | 1.00 | N/A | N/A | N/A | N/A | N/A | N/A | N/A |
| 457 | 8.125 | 4.063 | 3.250 | 1.625 | 5/8 UNC | 0.88 | 1.13 | N/A | N/A | N/A | N/A | N/A | N/A | N/A |
| 527 | 9.500 | 4.750 | 3.750 | 1.875 | 5/8 UNC | 1.00 | 1.25 | N/A | N/A | N/A | N/A | N/A | N/A | N/A |
| GW607 | 12.750 | 6.375 | 6.380 | 3.190 | 5/8 UNC | 1.00 | 1.00 | N/A | N/A | N/A | N/A | N/A | N/A | N/A |
| GW707 | 12.500 | 6.250 | 5.500 | 2.750 | 1 UNC | 1.56 | 1.56 | N/A | N/A | N/A | N/A | N/A | N/A | N/A |
| GW807 | 14.250 | 7.125 | 6.500 | 3.250 | 1 UNC | 1.66 | 1.66 | N/A | N/A | N/A | N/A | N/A | N/A | N/A |
| GW1007 | 17.750 | 8.875 | 6.875 | 3.438 | 1-1/4 UNC | 2.04 | 2.04 | N/A | N/A | N/A | N/A | N/A | N/A | N/A |

### Fan Detail for Models GW607 Through GW1007

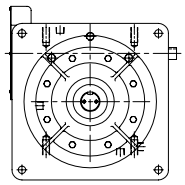

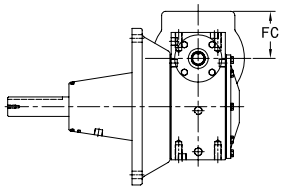


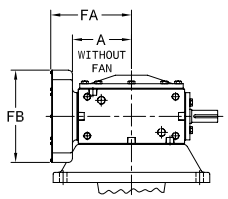


| MODEL | A | FA | FB | FC |
|---|---|---|---|---|
| GW607 | N/A | 11.13 | 9.50 | 4.00 |
| GW707 | N/A | 11.37 | 9.65 | 4.83 |
| GW807 | N/A | 12.52 | 9.65 | 4.83 |
| GW1007 | N/A | 14.69 | 11.28 | 5.62 |

ALL GW MODELS ARE FAN COOLED.