

Basic Construction Type: 22200 Series Spherical Bearing With Non-Separable Inner Ring

Rolling Elements: Separated Spherical Rolling Elements

Bearing Material: Bearing Quality Steel

Seal Type: NYLAPLATE or LAMBDA

Lubrication: Sealed Bearings: Polyurea thickened NLGI 2 EP Grease. Unsealed Bearings: Corrosion Preventive Oil

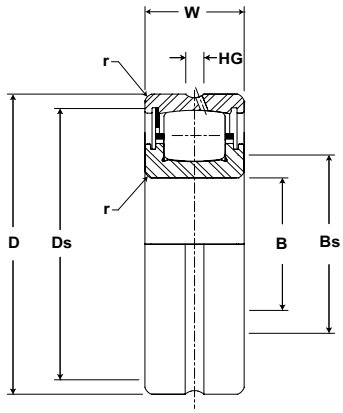

SB 22200

Part No.	B		D		W		Bs	Ds	HG	J	r	Limiting Speed (In Oil)	BDR	Bearing Weight
Base Bearing	Bore Diameter		Outside Diameter		Width		Min Shoulder Diameter Inner	Min Shoulder Diameter Outer	Annular Lub Groove	Lambda Seal Minimum Clearance	Maximum radius or fillet to clear		Basic Dynamic Rating	
	mm inch		mm inch		mm inch		mm inch		mm inch		mm inch	RPM*	N/lb	kg lb
	Nom.	Tol.	Nom.	Tol.	Nom.	Tol.	Ref	Ref	W33	Ref	Ref			
SB-22204	20.000	+0/-.010	47.000	+0/-.013	18.00	+0/-.13	25	41	3	3	1.0	11000	31,140	.15
	0.7874	+0/-.0004	1.8504	+0/-.0005	.709	+0/-.005	1.0	1.6	.1	.1	.04		7,000	.32
SB-22205	25.000	+0/-.010	52.000	+0/-.013	18.00	+0/-.13	30	46	5	3	1.0	9000	36,030	.18
	0.9843	+0/-.0004	2.0472	+0/-.0005	.709	+0/-.005	1.2	1.8	.2	.1	.04		8,100	.40
SB-22206	30.000	+0/-.010	62.000	+0/-.013	20.00	+0/-.13	36	56	5	3	1.0	8100	51,150	.29
	1.1811	+0/-.0004	2.4409	+0/-.0005	.787	+0/-.005	1.4	2.2	.2	.1	.04		11,500	.64
SB-22207	35.000	+0/-.013	72.000	+0/-.013	23.00	+0/-.13	41	61	5	3	1.0	6800	67,160	.43
	1.378	+0/-.0005	2.8346	+0/-.0005	.906	+0/-.005	1.6	2.4	.2	.1	.04		15,100	.95
SB-22208	40.000	+0/-.013	80.000	+0/-.013	23.00	+0/-.13	48	71	5	3	1.0	6000	74,730	.54
	1.5748	+0/-.0005	3.1496	+0/-.0005	.906	+0/-.005	1.9	2.8	.2	.1	.04		16,800	1.20
SB-22209	45.000	+0/-.013	85.000	+0/-.015	23.00	+0/-.13	53	74	5	3	1.0	5600	79,170	.59
	1.7717	+0/-.0005	3.3465	+0/-.0006	.906	+0/-.005	2.1	2.9	.2	.1	.04		17,800	1.30
SB-22210	50.000	+0/-.013	90.000	+0/-.015	23.00	+0/-.13	58	79	5	3	1.0	5250	83,180	.64
	1.9685	+0/-.0005	3.5433	+0/-.0006	.906	+0/-.005	2.3	3.1	.2	.1	.04		18,700	1.40
SB-22211	55.000	+0/-.015	100.000	+0/-.015	25.00	+0/-.15	64	89	5	3	1.5	4650	102,300	.86
	2.1654	+0/-.0006	3.937	+0/-.0006	.984	+0/-.006	2.5	3.5	.2	.1	.06		23,000	1.90
SB-22212	60.000	+0/-.015	110.000	+0/-.015	28.00	+0/-.15	71	99	5	3	1.5	4200	129,880	1.18
	2.3622	+0/-.0006	4.3307	+0/-.0006	1.102	+0/-.006	2.8	3.9	.2	.1	.06		29,200	2.60
SB-22213	65.000	+0/-.015	120.000	+0/-.015	31.00	+0/-.15	74	107	5	3	1.5	3800	157,900	1.54
	2.5591	+0/-.0006	4.7244	+0/-.0006	1.221	+0/-.006	2.9	4.2	.2	.1	.06		35,500	3.40
SB-22214	70.000	+0/-.015	125.000	+0/-.020	31.00	+0/-.15	79	112	5	3	1.5	3650	159,680	1.63
	2.7559	+0/-.0006	4.9213	+0/-.0008	1.221	+0/-.006	3.1	4.4	.2	.1	.06		35,900	3.60
SB-22215	75.000	+0/-.015	130.000	+0/-.020	31.00	+0/-.15	84	117	5	3	1.5	3500	167,240	1.77
	2.9528	+0/-0006	5.1181	+0/-0008	1.221	+0/-060	3.3	4.6	.2	.1	.06		37,600	3.90

Add K to base number indicate K bore option
Add W22 for select OD
All bearings are supplied with W33 option unless otherwise specified
*Refers to oil lubrication and moderate load, use 50% of value for grease lubrication.
Complete adapter number indicated adapter sleeve, locknut, and washer, for components refer to S=sleeve, N= lock Nut, W= lock washer
For Expansion type bearing add E suffix immediately after diametrical clearance specification per nomenclature diagram.
For Sealing options see page D-8
Outside diameter may be oversized, due to internal retaining ring

Metric dimensions for reference only.
Not all parts are available from stock. Please contact customer service for availability (800) 626-2120.
For more information on bearing capabilities outside of our standard offering, please contact Application Engineering (800) 626-2093.

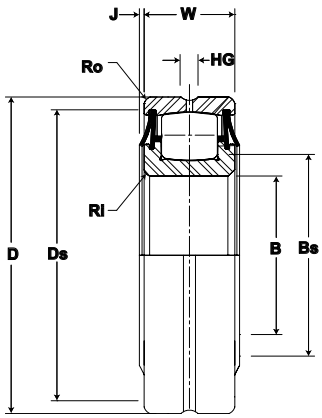

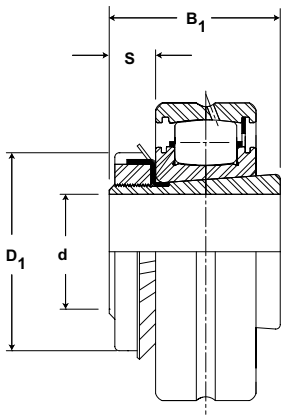



SB 22200

Part No.	Straight Bore Internal Radial Clearance								Taper (K) Bore Internal Radial Clearance (1" in 12" on Diameter)								Optional Adapter Dimensions				
Base Bearing	C2		Standard		C3		C4		C2		Standard		C3		C4		Adapter No.	Adapter Shaft Dimension	B1	S	D1
	mm inch		mm inch		mm inch		mm inch		mm inch		mm inch		mm inch		mm inch			mm inch		mm inch	
	Min	Max	Min	Max	Min	Max	Min	Max	Min	Max	Min	Max	Min	Max	Min	Max		(Ref)	(Ref)	(Ref)	(Ref)
SB-22204	.0102 .0004	.2032 .0008	.0356 .0014	.0457 .0018	.0610 .0024	.0152 .0006	.0254 .0010	.0356 .0014	.0457 .0018	.0610 .0024	-	-	-	-	-						
SB-22205	.0152 .0006	.0254 .0010	.0406 .0016	.0559 .0022	.0711 .0028	.0203 .0008	.0305 .0012	.0432 .0017	.0559 .0022	.0762 .0030	SNW 05*	3.3 .75	5.6 1.27	2.0 .45	6.9 1.56						
SB-22206	.0152 .0006	.0305 .0012	.0457 .0018	.0610 .0024	.0813 .0032	.0203 .0008	.0356 .0014	.0508 .0020	.0660 .0026	.0864 .0034	SNW 06*	4.2 .94	6.0 1.36	2.0 .45	7.8 1.75						
SB-22207	.0152 .0006	.0305 .0012	.0457 .0018	.0610 .0024	.0813 .0032	.0203 .0008	.0356 .0014	.0508 .0020	.0660 .0026	.0864 .0034	SNW 07*	5.3 1.19	6.4 1.45	2.1 .48	9.2 2.06						
SB-22208	.0203 .0008	.0356 .0014	.0559 .0022	.0762 .0030	.0813 .0032	.0305 .0012	.0457 .0018	.0610 .0024	.0813 .0032	.1041 .0041	SNW 08*	5.8 1.31	6.7 1.50	2.2 .50	10.0 2.25						
SB-22209	.0203 .0008	.0356 .0014	.0559 .0022	.0762 .0030	.0813 .0032	.0305 .0012	.0457 .0018	.0610 .0024	.0813 .0032	.1041 .0041	SNW 09*	6.4 1.44	7.0 1.58	2.2 .50	11.3 2.53						
SB-22210	.0254 .0010	.0432 .0017	.0660 .0026	.0914 .0036	.1194 .0047	.0356 .0014	.0559 .0022	.0762 .0030	.0991 .0039	.1245 .0049	SNW 10*	7.5 1.69	7.9 1.77	2.5 .56	12.0 2.69						
SB-22211	.0254 .0010	.0432 .0017	.0660 .0026	.0914 .0036	.1194 .0047	.0356 .0014	.0559 .0022	.0762 .0030	.0991 .0039	.1245 .0049	SNW 11*	8.6 1.94	8.2 1.84	2.5 .56	13.2 2.97						
SB-22212	.0254 .0010	.0432 .0017	.0660 .0026	.0914 .0036	.1194 .0047	.0356 .0014	.0559 .0022	.0762 .0030	.0991 .0039	.1245 .0049	-	-	-	-	-						
SB-22213	.0305 .0012	.0508 .0020	.0813 .0032	.1118 .0044	.1448 .0057	.0457 .0018	.0711 .0028	.0940 .0037	.1245 .0049	.1549 .0061	SNW 13	9.7 2.19	9.4 2.11	2.8 .63	15.0 3.38						
SB-22214	.0305 .0012	.0508 .0020	.0813 .0032	.1118 .0044	.1448 .0057	.0457 .0018	.0711 .0028	.0940 .0037	.1245 .0049	.1549 .0061	-	-	-	-	-						
SB-22215	.0305 .0012	.0508 .0020	.0813 .0032	.1118 .0044	.1448 .0057	.0457 .0018	.0711 .0028	.0940 .0037	.1245 .0049	.1549 .0061	SNW 15*	10.9 2.44	10.2 2.30	3.0 .67	17.3 3.88						

* For sizes marked, standard ABMA locknuts and lockwashers will not clear the LAMBDA seal unless 1/16" thick spacer is used between the face of bearing and washer (or locknut).