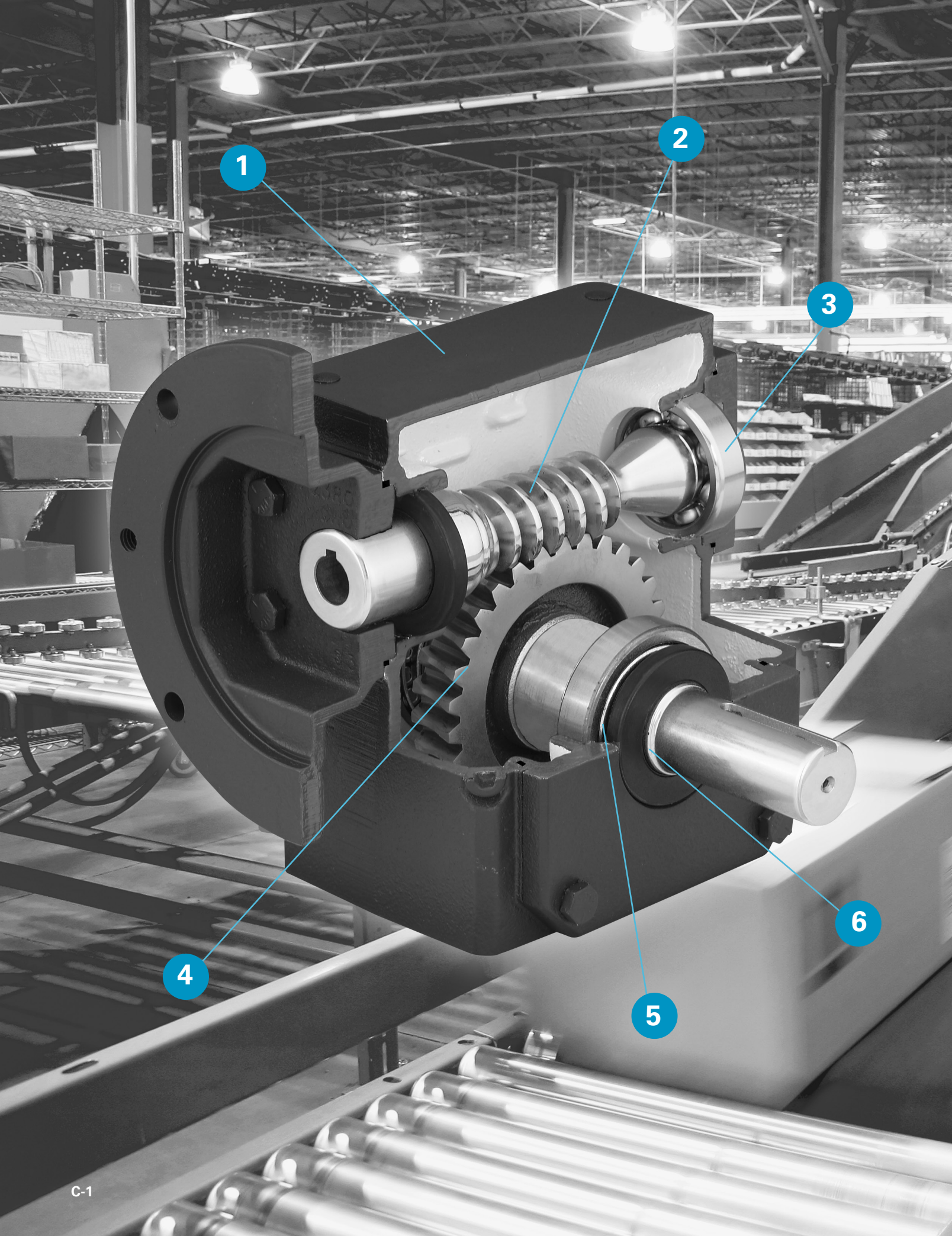
1
2
3
4
5
6



Morse® RAIDER Plus®

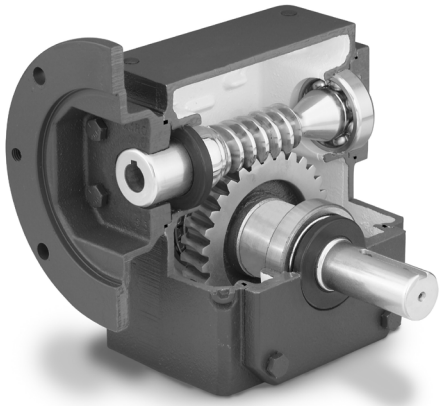

Design Features

1. **Rugged Cast Iron Housings**
   - Raider® Plus speed reducers incorporate rugged cast iron single piece construction for all housings, motor adapters, covers and mounting bases, providing maximum strength and dependability.
2. **High Lead Angle Worm**
   - Case hardened, ground and polished
3. **Large, Single Row Ball Bearings On Input Shaft**
   - Absorb radial and thrust loads on higher input speeds for increased efficiency. Tapered roller bearings are used in 375, 450, 516 and 600 units.
4. **Forged Bronze Worm Gears on Input Shaft**
   - Provide greater tensile strength than cast bronze, are precision manufactured to AGMA specifications for long, trouble-free operation. Cast iron hubs are used in larger sizes for extra strength.
5. **Heavy-duty Tapered Roller Bearings on all Output Shafts**
   - Effectively handle inherent gear load and provide maximum overhung load capacity.
6. **Viton® Seals on Exclusive Sealing Surfaces***
   - Helps keep contaminants out and lubrication in. Viton seals on sizes 133-325, and double lip seals on sizes 375-600.
7. **All Units Factory Filled with Polyglycol Oil**

* VITON® is believed to be a trademark or trade name of The Chemours Company and is not controlled by Regal Beloit Corporation.


1


2

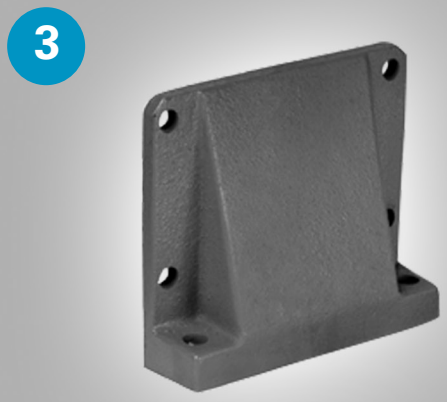
3

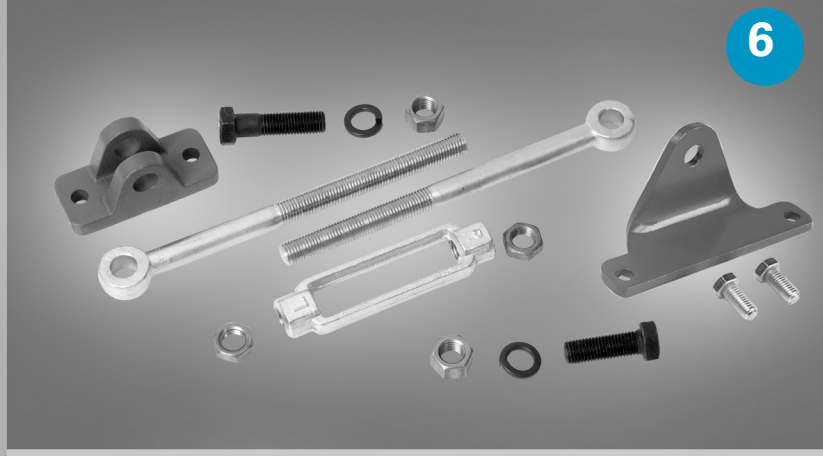
6

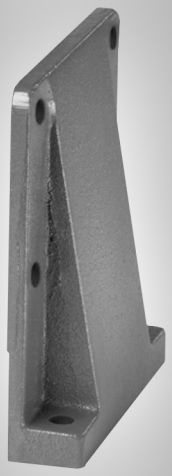
4


7


5

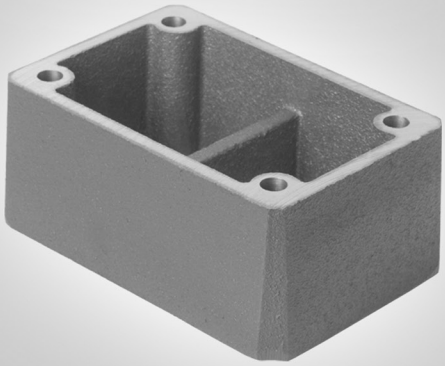
8

Accessories

Need a reducer in a hurry? It's never a problem with Raider® Plus worm gear speed reducers, because you need only four basic units to serve every conceivable application. Any of the Raider Plus component accessories can be added in just minutes to convert the basic unit to the desired style.That means absolute minimum inventory requirements - at absolute minimum costs!

Design Features

1. **Standard Horizontal Base Kit**
2. **Motor Adapter Kit**
3. **Vertical Low Base Kit**
4. **Vertical High Base Kit**
5. **Vertical "J" Base Kit**
6. **Torque Arm Kit (Brackets ordered separately)**
7. **Steel Flange Kit**
8. **Riser Block Kit**

U 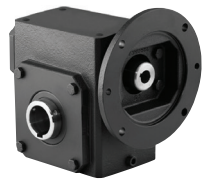	C 	QVL 	UF 
UT 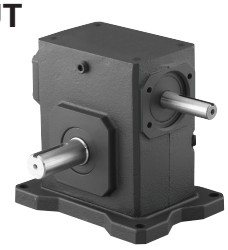	CT 	QVH 	CF 
UB 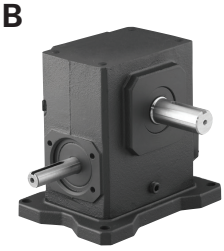	CB 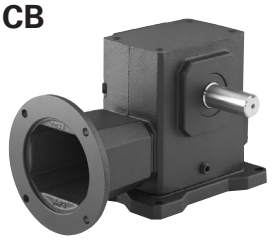	QVJ 	QF 
Q 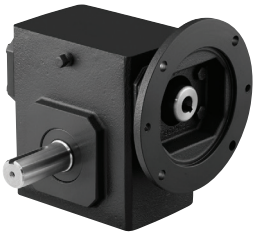	UVL 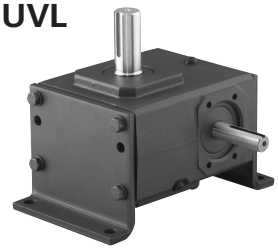	CVL 	UH 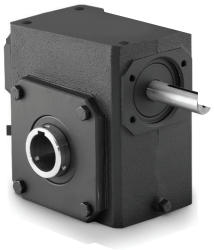
QT 	UVH 	CVH 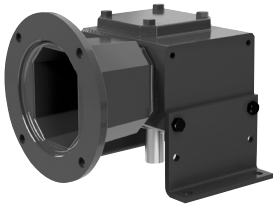	UHT 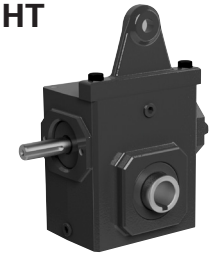
QB 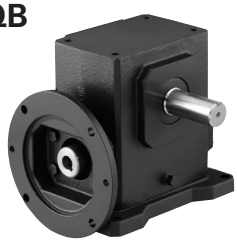	UVJ 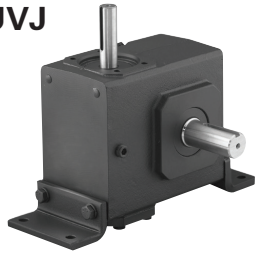	CVJ 	UHF 

QH 	**UHMT** 	**CHMB** 	**QHVH** 	**QRT** 
QHT 	**UHMB** 	**UHVL** 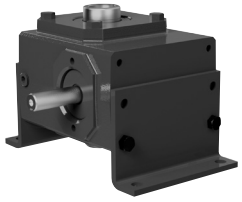	**QHVJ** 	**CRT** 
QHF 	**QHMT** 	**UHVH** 	**CHVL** 	
CH 	**QHMB** 	**UHVJ** 	**CHVH** 	
CHT 	**CHMT** 	**QHVL** 	**CHVJ** 	
CHF 	**Components** 			

How to Order Raider® Plus Reducers

The Morse® Worm Gear Speed Reducer can easily be sized and ordered by following these instructions.

Basic Unit and Components

This method of ordering is used when versatility and modularity are desired. It is especially convenient for distributors and customers that want to stock the various basic units and components, so that an almost unlimited number of configurations can be put together. When ordering by this method, the basic unit and components will not be assembled, but will be shipped in separate cartons.

Ordering Steps:

1. Find the desired style to be ordered on pages C-19 through C-62 in this catalog.
2. Go to the dimension table for the specific style desired and find the "Components" section. The basic unit and component part numbers are shaded for easy reference.
3. Complete the basic unit part number by following the footnote instructions.
4. Order the complete basic unit part number along with the indicated component part numbers that will make up the desired Raider Plus style.

Example: A QT Style, 145TC NEMA frame, 30:1 Ratio, 3.25" C.D., with left output shaft. A standard base kit is also required.

Steps:

1. Go to pages C-21 and C-22 where style QT will be found.
2. The table on page C-22 shows basic unit numbers and dimensions. The table shows components and dimensions for Style QT – with Base – Worm Top.
3. Find the unit size needed which is 325Q140, then complete the Basic Unit part number by adding shaft assembly and ratio symbol to unit size – 325Q140**L30**.
4. Basic unit part number and component part numbers required are:

Reducer:	**325Q140L30**
Base Kit:	**325S-BK**

Part Description Configuration

Center Distance only	Type of Input	C Face Size	O.P. Shaft Arrangement	Ratio	Bore Size (for Hollow ouput
		(if applicable)			sizes 133-325)
133	**Q**	**56**	**LR**	**30**	
	U = Universal, Shaft In		L = Left Output	5	010 = 5/8
1.33"=133	**Q = C Face Quilled**	**56C = 56**	R = Right Output	10	012 = 3/4
1.54"=154		143/145TC = 140	**LR = Left & Right Output**	15	014 = 7/8
1.75"=175		182/184TC = 180	H = Hollow Output	20	015 = 15/16
2.06"=206		213/215T = 210		25	100 = 1
2.37"=237				**30**	101 = 1 1/16
2.62"=262				40	102 = 1 1/8
3.00"=300				50	103 = 1 3/16
3.25"=325				60	104 = 1 1/4
3.75"=375					105 = 1 5/16
4.50"=450					107 = 1 7/16
5.16"=516					108 = 1 1/2
6.00"=600					110 = 1 5/8
					111 = 1 11/16
					112 = 1 3/4
					115 = 1 15/16
					200 = 2
					202 = 2 1/8
					203 = 2 3/16

It is recommended to use the above chart to arrive at Raider Plus reducer part description.
The above sample part description is 133Q56LR30. This description does not include feet or other available mounting accessories that are available for the Raider Plus product. These accessories are sold separately using the part descriptions for the appropriate product. Not all ratios are available in each configuration.

Raider Plus sizes 375 - 600 units ordered with hollow outputs have a stock bore for each C.D. Bushing kits are available to help reducers fit on shafts that are smaller than the stock bore.

Kit Descriptions

Bushing Kits

203 BU 200
- 200 = I.D.
- BU = Bushing Kit
- 203 = O.D.

NEMA Frame Adapter Kit

375 MAK 56
- 56 = NEMA size 56 C Face
- MAK = Motor Adapter Kit
- 375 = Fits 3.75" C.D. Reducer

Torque Arm Kit

133 H - TAK
- TAK = Torque Arm Kit
- H = Generally used with Hollow Output Reducers (not limited to)
- 133 = Fits 1.33" C.D. Reducer

Adjustable Torque Arm Kit

133-375 ATAK
- ATAK = Adjustable Torque Arm Kit
- 133-375 = Fits Units 1.33"-3.75" C.D.

Fan Kit

375 FAN
- FAN = Fan Kit
- 375 = Fits 3.75" C.D. Reducer

Standard Base Kit

206 S-BK
- S-BK = Standard Base Kit
- 206 = Fits 2.06" C.D. Reducer

Flange Kit

206 H-FK
- FK = Flange Kit
- H = Generally used with Hollow Output Reducers (not limited to)
- 206 = Fits 2.06" C.D. Reducer

Vertical Low Base Kit

262 VL-BK
- VL-BK = Vertical Low Base Kit
- 262 = Fits 2.62" C.D. Reducer

Vertical High Base Kit

262 VH-BK
- VH-BK = Vertical High Base Kit
- 262 = Fits 2.62" C.D. Reducer

Vertical "J" Base Kit

262 VJ-BK
- VJ-BK = Vertical "J" Base Kit
- 262 = Fits 2.62" C.D. Reducer

Selection Procedure of Raider® Plus Worm Gear Speed Reducers

1. **Determine Service Factor**
From service factor tables on pages C-11 and C-12 determine service factor for the application.

2. **Determine the Overall Drive Ratio**

$$\text{Overall Drive Ratio} = \frac{\text{rpm of driver}}{\text{rpm of driven}}$$

When over-all drive ratio is not one of the stock speed reducer ratios shown in tables on page C-13 through C-17, a chain, belt, or gear drive with further reduction for either the input or output side will be necessary.

3. **Determine Equivalent hp or Normal Torque**

A. Horsepower Method:

Equivalent hp = Actual Motor hp × Service Factor (Step # 1)

B. Torque Method:

Normal Torque = Actual Torque × Service Factor (Step # 1)

4. **Determine the Size of Speed Reducer Required**

A. Horsepower Method:

Refer to pages C-13 through C-17 and select a speed reducer having a mechanical input horsepower equal to or slightly greater than the equivalent hp calculated in Step No. 3 above.

B. Torque Method:

Refer to pages C-13 to C-17 and select a speed reducer having a mechanical output torque rating equal to or slightly greater than the normal torque calculated in Step No. 3 above. If the required input and output speeds are not listed in these tables, the ratings can be determined by straight line interpolation. When the input speed is less than 100 rpm, ratings for 100 rpm must be used.

5. **Check the Thermal Rating**
The Thermal Rating is the maximum input horsepower or output torque that can be transmitted continuously without exceeding a 100° F temperature rise over ambient. The thermal rating should not be exceeded. Service Factors are not applied to Thermal Ratings.
It is not necessary to check thermal ratings when the reducer does not operate more than 1/2 hour at a time and is shut down for a minimum period equal to the running time.

A. Horsepower Method:

Check the actual motor hp against the thermal input hp ratings (see pages C-13 to C-17), and if the motor hp is greater, select either a unit with a fan and/or a larger speed reducer so that the thermal rating is greater than the actual hp.

B. Torque Method:

Check the actual torque against the thermal output ratings (see pages C-13 to C-17), and if the actual torque is greater, select a unit with a fan and/or a larger speed reducer so that the thermal rating is greater than the actual torque.

6. **Determine the Motor Horsepower**

Use the following equation when motor hp is not known:

$$\text{Motor Horsepower} = \frac{\text{Actual Torque} \times \text{Thermal Input hp}}{\text{Thermal Output Torque}}$$

7. **Check the Overhung Load and Thrust Loads**
Calculate the overhung load for drives to be mounted directly on the reducer shafts by following instructions on page C-10. Check this and any existing thrust loads against the load values shown on pages C-13 to C-17, and if the calculated load is greater than the values in the table, select a larger speed reducer.

Note: Refer combined overhung and thrust loads to Application Engineering (1 800 626 2093).

Example No. 1 - Horsepower Method

Select a worm gear speed reducer for a dough mixer in a bakery. The speed reducer will be driven by a 1.0 hp, 1750 rpm, 56 Frame, C-Face Motor. The left reducer output shaft will be directly coupled to the mixer shaft. The mixer will operate 8 - 10 hours daily and the shaft speed is 58 rpm. The reducer also requires a horizontal mounting base with the worm on top.

1. **Determine the Service Factor**
From the table on page C-11, note that the service factor for a dough mixer (Food Industry) operating 3 - 10 hours per day is 1.25.

2. **Determine the Overall Drive Ratio**

$$\text{Overall Drive Ratio} = \frac{\text{rpm of Driver}}{\text{rpm of Driven}} = \frac{1750}{58} = 30.17$$

Since there is not an auxiliary input or output drive required, the reducer ratio needed is 30:1.

3. **Determine Equivalent Horsepower**

$$\text{Equivalent hp} = \text{Actual Motor hp} \times \text{S F} =$$

$$1.0 \times 1.25 = 1.25 \text{ hp}$$

4. **Determine the Size of Speed Reducer Required**
From page C-13 under "1750 rpm Driver -30:1 Ratio - 58.3rpm Output" and under "Input hp Mechanical" find the rating equal to or greater than the 1.25 equivalent hp calculated in Step No. 3. Note that a 237 reducer has mechanical rating of 1.65 hp. The correct part numbers required are:

Reducer: **237Q56L30**
Base Kit: **237S-BK**

5. **Check the Thermal Rating**
From the rating tables on page C-13, read to the right and note the Thermal hp is 1.65 hp, which is greater than the motor horsepower (1.0 hp), therefore, the unit is not thermally limited.

6. **Determine the Motor Horsepower**
The motor horsepower is already known to be 1.0 hp.

7. **Check Overhung Load and Thrust Loads**
The unit will be coupling connected on the output shaft. Overhung load does not need to be calculated. There is not any thrust on the output shaft. There is neither thrust nor overhung load on the input shaft because it is mated with a C-Face motor. Therefore, the reducer selected is the proper size.

Example No. 2 - Torque Method

Select a worm gear speed reducer for a belt conveyor (general purpose), not uniformly fed. The speed reducer will be driven by a 1750 rpm electric motor directly connected by a coupling, with a 1.23:1 ratio chain drive from the reducer to the head shaft of the conveyor. The pitch diameter of the driver sprocket mounted on the reducer output shaft is 5.032 inches. The conveyor will operate 10 hours per day, and the head shaft speed is 140 rpm. The reducer will also require a horizontal mounting base with the worm on top. Conveyor calculations indicate that 1710 inch pounds of torque is needed at the conveyor head shaft.

1. Determine the Service Factor

From the table on page C-11, note that the service factor for a belt conveyor (general purposen not uniformly fed) operating 3 - 10 hours per day is 1.25.

2. Determine the Overall Drive Ratio

$$\text{Overall Drive Ratio} = \frac{\text{rpm of Driver}}{\text{rpm of Driven}} = \frac{1750}{140} = 12.5 : 1$$

$$\text{Speed Reducer Ratio} = \frac{\text{Overall Drive Ratio}}{\text{Chain Drive Ratio}} = \frac{12.5}{1.23} = 10.16 : 1$$

3. Determine the Normal Torque

The normal torque required for reducer selection is the actual torque required at the reducer output shaft. Therefore, we must convert the 1710 inch pounds of actual torque at the conveyor head shaft to the actual required torque at the reducer output shaft, and then multiply by the service factor.

Actual Torque at Reducer Output Shaft =

$$\frac{\text{Actual Torque At Conveyor Head Shaft}}{\text{Chain Drive Ratio}} = \frac{1710}{1.23} = 1{,}390 \text{ In-lbs.}$$

Normal Torque =

Actual Reducer Output Torque × S F =

1,390 × 1.25 = 1738 in-lbs.

4. Determine the Size of Speed Reducer Required

From page C-13 under "1750 rpm Driver - 10 to 1 ratio - 175 rpm Driven" and under "Mechanical Output Torque" find the rating equal to or greater than the 1738 inch-pounds normal torque calculated in step no. 3. Note that a 3.00 inch center distance reducer has a mechanical rating of 2037 inch-pounds.

5. Check the Thermal Rating

From the rating table on page C-13, read to the right and note the thermal torque for a 3.00 inch C.D. reducer is 2037 inch- pounds, which is greater than the actual torque at the reducer output shaft (1,390 inch-pounds) calculated in step no. 3. Therefore, a 3.00 inch C.D. unit, which has a thermal rating of 2037 inch-pounds, can be used.

The correct part numbers required are:

Reducer: **300ULR10**
Base Kit: **300S-BK**

6. Determine the Motor Horsepower

$$\text{Motor Horsepower} = \frac{\text{Actual Torque X Thermal Input hp}}{\text{Thermal Output Torque}}$$

$$= \frac{1{,}390 \times 5.25}{2004}$$

$$= 3.64$$

Use a 5 horsepower motor.

7. Check Overhung and Thrust Loads

$$\text{OL (See below)} = \frac{2 \times T \times K}{\text{P.D. of Sprocket}}$$

$$= \frac{2 \times 1390 \times 1.0}{5.032}$$

$$= 552.50 \text{ Pounds}$$

From rating table on page C-13, note the maximum overhung load for the output shaft of the 300ULR10 reducer is 2170 lbs., which is greater than the calculated load on shaft of 553 lbs. There is no thrust on the output shaft. There is neither thrust or overhung load on the input shaft because it is direct couple connected. The reducer selection size is ample.

Verify if motor HP is less than or equal to mechanical input HP.

Overhung Loads

When a speed reducer is driven by any belt, chain or gear drive, or when the speed reducer drives a driven unit through a belt, chain or gear drive, overhung loads must not exceed those shown on pages C-13 through C-17. Use the following formula to calculate the overhung loads:

$$OL = \frac{2TK}{D}$$

where
- OL = Overhung Load
- T = Actual Shaft Torque (inch-pounds)
- D = P.D. of Sprocket, Sheave , Pulley or Gear
- K = 1.0 for Chain Drive
- = 1.25 for Gear Drive
- = 1.25 for Gearbelt Drive
- = 1.50 for V-Belt Drive
- = 2.50 for Flat Belt Drive

No overhung loads are encountered when the speed reducer is coupling connected to the driver and/or driven machine. However, care should be taken in aligning the shafts to avoid pre-loading bearings in misalignment.

Service Factors for

Enclosed Worm Gear Applications

(Service factors shown apply only if electric or hydraulic motors are used. For single or multi-cylinder engines, see table on next page for conversion.)

APPLICATION	Up to 3 Hrs. Day	3-10 Hrs. Day	Over 10 Hrs. Day
AGITATORS (Mixers)			
Pure Liquids	–	1.00	1.25
Liquids and Solids	1.00	1.25	1.50
Liquids-Variable Density	1.00	1.25	1.50
BLOWERS			
Centrifugal	1.00	1.25	–
Lobe	1.00	1.25	1.50
Vane	–	1.00	1.25
BREWING AND DISTILLING			
Bottling Machinery	–	1.00	1.25
Brew Kettles, Continuous Duty	–	1.00	1.25
Cookers, Continuous Duty	–	1.00	1.25
Mash Tubs, Continuous Duty	–	1.00	1.25
Scale Hopper, Frequent Starts	1.00	1.25	1.50
CAN FILLING MACHINES	–	1.00	1.25
CAR DUMPERS	1.25	1.50	1.75
CAR PULLERS	1.00	1.25	1.50
CLARIFIERS	–	1.00	1.25
CLASSIFIERS	1.00	1.25	1.50
CLAY WORKING MACHINERY			
Brick Press	1.25	1.50	1.75
Briquette Machine	1.25	1.50	1.75
Pug Mill	1.00	1.25	1.50
COMPACTORS	1.50	1.75	2.00
COMPRESSORS			
Centrifugal	–	1.00	1.25
Lobe	1.00	1.25	1.50
Reciprocating, Multi-Cylinder	1.00	1.25	1.50
Reciprocating, Single-Cylinder	1.25	1.50	1.75
CONVEYORS - GENERAL PURPOSE			
Uniformly Loaded or Fed	–	1.00	1.25
Not Uniformly Fed	1.00	1.25	1.50
Reciprocating or Shaker	1.25	1.50	1.75
CRANES			
Dry Dock			
Main Hoist	1.25	1.50	1.75
Auxiliary	1.25	1.50	1.75
Boom Hoist	1.25	1.50	1.75
Slewing Drive	1.25	1.50	1.75
Traction Drive	1.50	1.50	1.50
Container			
Main Hoist	Refer To Application Engr.		
Boom Hoist	Refer To Application Engr.		
Trolley Drive	Refer To Application Engr.		
(Gantry Drive)			
(Traction Drive)	Refer To Application Engr.		
Mill Duty			
Main Hoist	Refer To Application Engr.		
Auxiliary	Refer To Application Engr.		
Bridge and			
Trolley Travel	Refer To Application Engr.		
Industrial Duty			
Main	1.00	1.25	1.50
Auxiliary	Refer To Application Engr.		
Bridge and Trolley Travel	Refer To Application Engr.		
CRUSHER			
Stone or Ore	1.50	1.75	2.00
DREDGES			
Cable Reels	1.00	1.25	1.50
Conveyors	1.00	1.25	1.50
Cutter Head Drives	1.25	1.50	1.75
Pumps	1.00	1.25	1.50
Screen Drives	1.25	1.50	1.75
Stackers	1.00	1.25	1.50
Winches	1.00	1.25	1.50
ELEVATORS			
Bucket	1.00	1.25	1.50
Centrifugal Discharge	–	1.00	1.25
Escalators	Refer To Application Engr.		
Freight	Refer To Application Engr.		
Gravity Discharge	–	1.00	1.25
EXTRUDERS			
General	1.25	1.25	1.25
Plastics			
(a) Variable Speed Drive	1.50	1.50	1.50
(b) Fixed Speed Drive	1.75	1.75	1.75
Rubber			
(a) Continuous Screw Operation	1.50	1.50	1.50
(b) Intermittent Screw Operation	1.75	1.75	1.75

Up to APPLICATION	3 Hrs. Day	3-10 Hrs. Day	Over 10 Hrs. Day
FANS			
Centrifugal	–	1.00	1.25
Cooling Towers	Refer To Application Engr.		
Forced Draft	1.25	1.25	1.25
Induced Draft	1.00	1.25	1.50
Industrial & Mine	1.00	1.25	1.50
FEEDERS			
Apron	–	1.25	1.50
Belt	1.00	1.25	1.50
Disc	–	1.00	1.25
Reciprocating	1.25	1.50	1.75
Screw	1.00	1.25	1.50
FOOD INDUSTRY			
Cereal Cooker	–	1.00	1.25
Dough Mixer	1.00	1.25	1.50
Meat Grinders	1.00	1.25	1.50
Slicers	1.00	1.25	1.50
GENERATORS AND EXCITERS	–	1.00	1.25
HAMMER MILLS	1.50	1.50	1.75
HOISTS			
Heavy Duty	1.25	1.50	1.75
Medium Duty	1.00	1.25	1.50
Skip Hoist	1.00	1.25	1.50
LAUNDRY TUMBLERS	1.00	1.25	1.50
LAUNDRY WASHERS	1.25	1.25	1.50
LUMBER INDUSTRY			
Barkers			
-Spindle Feed	1.25	1.25	1.25
- Main Drive	1.50	1.50	1.50
Conveyors			
- Burner	1.25	1.25	1.50
- Main or Heavy Duty	1.50	1.50	1.50
- Main Log	1.50	1.50	1.50
- Re-saw, Merry-Go-Round	1.25	1.25	1.50
- Slab	1.50	1.50	1.75
-Transfer	1.25	1.25	1.50
Chains			
- Floor	1.50	1.50	1.50
- Green	1.50	1.50	1.50
Cut-Off Saws			
- Chain	1.50	1.50	1.50
- Drag	1.50	1.50	1.50
Debarking Drums	1.50	1.50	1.75
Feeds			
- Edger	1.25	1.25	1.50
- Gang	1.50	1.50	1.50
-Trimmer	1.25	1.25	1.50
Log Deck	1.50	1.50	1.50
Log Hauls-Incline-Well Type	1.50	1.50	1.50
Log Turning Devices	1.50	1.50	1.50
Planer Feed	1.25	1.25	1.50
Planer Tilting Hoists	1.50	1.50	1.50
Rolls-Live-off Brg.-Roll Cases	1.50	1.50	1.50
Sorting Table	1.25	1.25	1.50
Tipple Hoist	1.25	1.25	1.50
Transfers			
- Chain	1.50	1.50	1.50
- Causeway	1.50	1.50	1.50
Tray Drives	1.25	1.25	1.50
Veneer Lathe Drives	Refer To Application Engr.		
METAL MILLS			
Draw Bench Carriage and Main Drive	1.00	1.25	1.50
Runout Table			
Non-reversing			
Group Drives	1.00	1.25	1.50
Individual Drives	1.50	1.50	1.75
Reversing	1.50	1.50	1.75
Slab Pushers	1.25	1.25	1.50
Shears	1.50	1.50	1.75
Wire Drawing	1.00	1.25	1.50
Wire Winding Machine	1.00	1.25	1.50
METAL STRIP PROCESSING MACHINERY			
Bridles	1.25	1.25	1.50
Coilers & Uncoilers	1.00	1.00	1.25
Edge Trimmers	1.00	1.25	1.50
Flatteners	1.00	1.25	1.50
Loopers(Accumulators)	1.00	1.00	1.00
Pinch Rolls	1.00	1.25	1.50
Scrap Choppers	1.00	1.25	1.50
Shears	1.50	1.50	1.75
Slitters	1.00	1.25	1.50

Enclosed Worm Gear Applications

APPLICATION	Up to 3 Hrs. Day	3-10 Hrs. Day	Over 10 Hrs. Day
MILLS, ROTARY TYPE			
Ball & Rod			
Spur Ring Gear	1.50	1.50	1.75
Helical Ring Gear	1.50	1.50	1.50
Direct Connected	1.50	1.50	1.75
Cement Kilns	1.50	1.50	1.50
Dryers & Coolers	1.50	1.50	1.50
MIXERS, CONCRETE	1.00	1.25	1.50
PAPER MILLS			
Agitator(Mixer)	1.50	1.50	1.50
Agitator for Pure Liquids	1.25	1.25	1.25
Barking Drums	1.75	1.75	1.75
Barkers - Mechanical	1.75	1.75	1.75
Beater	1.50	1.50	1.50
Breaker Stack	1.25	1.25	1.25
Calender	1.25	1.25	1.25
Chipper	1.75	1.75	1.75
Chip Feeder	1.50	1.50	1.50
Coating Rolls	1.25	1.25	1.25
Conveyors			
Chip, Bark, Chemical	1.25	1.25	1.25
Log(Including Slab)	1.75	1.75	1.75
Couch Rolls	1.25	1.25	1.25
Cutter	1.75	1.75	1.75
Cylinder Molds	1.25	1.25	1.25
Dryers			
Paper Machine	1.25	1.25	1.25
Conveyor Type	1.25	1.25	1.25
Embosser	1.25	1.25	1.25
Extruder	1.50	1.50	1.50
Fourdrinier Rolls (Includes Lump Breaker, Dandy Roll, Wire Turning, and Return Rolls)	1.25	1.25	1.25
Jordan	1.25	1.25	1.25
Kiln Drive	1.50	1.50	1.50
Mt. Hope Roll	1.25	1.25	1.25
Paper Rolls	1.25	1.25	1.25
Platter	1.50	1.50	1.50
Presses- Felt & Suction	1.25	1.25	1.25
Pulper	1.50	1.50	1.75
Pumps- Vacuum	1.50	1.50	1.50
Reel (Surface Type)	1.25	1.25	1.50
Screens			
Chip	1.50	1.50	1.50
Rotary	1.50	1.50	1.50
Vibrating	1.75	1.75	1.75
Size Press	1.25	1.25	1.25
Super Calender (See Note)	1.25	1.25	1.25
Thickener			
(AC Motor)	1.50	1.50	1.50
(DC Motor)	1.25	1.25	1.25
Washer			
(AC Motor)	1.50	1.50	1.50
(DC Motor)	1.25	1.25	1.25
Wind and Unwind Stand	1.00	1.00	1.00
Winders (Surface Type)	1.25	1.25	1.25
Yankee Dryers	1.25	1.25	1.25
PLASTICS INDUSTRY - PRIMARY PROCESSING			
Intensive Internal Mixers			
(a) Batch Mixers	1.75	1.75	1.75
(b) Continuous Mixers	1.50	1.50	1.50
Batch Drop Mill - 2 Smooth Rolls	1.25	1.25	1.25
Continuous Feed, Holding & Blend Mill	1.25	1.25	1.25
Compounding Mills	1.25	1.25	1.25
Calenders	1.50	1.50	1.50
PLASTICS INDUSTRY - SECONDARY PROCESSING			
Blow Molders	1.50	1.50	1.50
Coating	1.25	1.25	1.25
Film	1.25	1.25	1.25
Pipe	1.25	1.25	1.25
Pre-Plasticizers	1.50	1.50	1.50
Rods	1.25	1.25	1.25
Sheet	1.25	1.25	1.25
Tubing	1.25	1.25	1.50
PULLERS - BARGE HAUL	1.00	1.50	1.75
PUMPS			
Centrifugal	–	1.00	1.25
Proportioning	1.00	1.25	1.50
Reciprocating			
Single Acting, 3 or More Cylinders	1.00	1.25	1.50
Double Acting, 2 or More Cylinders	1.00	1.25	1.50
Rotary			
- Gear Type	–	1.00	1.50
- Lobe	–	1.00	1.25
- Vane	–	1.00	1.25
RUBBER INDUSTRY			
Intensive Internal Mixers			
(a) Batch Mixers	1.50	1.75	1.75
(b) Continuous Mixers	1.25	1.50	1.50
Mixing Mill - 2 Smooth Rolls - (If corrugated rolls are used, then use the same service factors that are used for a Cracker-Warmer)	1.50	1.50	1.50
Batch Drop Mill - 2 Smooth Rolls	1.50	1.50	1.50
Cracker Warmer - 2 Roll: 1 Corrugated Roll	1.75	1.75	1.75
Cracker - 2 Corrugated Rolls	1.75	1.75	1.75
RUBBER INDUSTRY (Cont'd.)			
Holding, Feed and Blend Mill - 2 Rolls	1.25	1.25	1.25
Refiner - 2 Rolls	1.50	1.50	1.50
Calenders	1.50	1.50	1.50
SAND MILLER	1.00	1.25	1.50
SEWAGE DISPOSAL EQUIPMENT			
Bar Screens	–	1.00	1.25
Chemical Feeders	–	1.00	1.25
SEWAGE DISPOSAL EQUIPMENT (Cont'd.)			
Dewatering Screens	1.00	1.25	1.50
Scum Breakers	1.00	1.25	1.50
Slow Or Rapid Mixers	1.00	1.25	1.50
Sludge Collectors	1.00	1.00	1.25
Thickener	1.00	1.25	1.50
Vacuum Filters	1.00	1.25	1.50
SCREENS			
Air Washing	–	1.00	1.25
Rotary - Stone Or Gravel	1.00	1.25	1.50
Traveling Water Intake	–	1.00	1.25
SUGAR INDUSTRY			
Beet Slicer	1.50	1.50	1.75
Cane Knives	1.50	1.50	1.50
Crushers	1.50	1.50	1.50
Mills (Low Speed End)	1.50	1.50	1.50
TEXTILE INDUSTRY			
Batchers	1.00	1.25	1.50
Calenders	1.00	1.25	1.50
Cards	1.00	1.25	1.50
Dry Cans	1.00	1.25	1.50
Dryers	1.00	1.25	1.50
Dyeing Machinery	1.00	1.25	1.50
Looms	1.00	1.25	1.50
Mangles	1.00	1.25	1.50
Nappers	1.00	1.25	1.50
Pads	1.00	1.25	1.50
Slashers	1.00	1.25	1.50
Soapers	1.00	1.25	1.50
Spinners	1.00	1.25	1.50
Tenter Frames	1.00	1.25	1.50
Washers	1.00	1.25	1.50
Winders	1.00	1.25	1.50

Anti-Friction Bearings Only.

Note: A Service Factor of 1.0 may be applied at the base of a super calender, operating over a speed range where part of the range is constant horsepower and part of the range is constant torque, provided that the constant horsepower part is greater than 1.5 to 1. A service factor of 1.25 is applicable to super calenders operating over the entire speed range at constant torque, or where the constant horsepower speed range is less than 1.5 to 1.

Service Factors for Electric and Hydraulic Motors

(For Service Factors For Single Or Multi-Cylinder Engines, see below)

Duration of Service (Hours Per Day)	Uniform Load	Moderate Shock	Heavy Shock	Extreme Shock
Occasional 1/2 Hour	–	–	1.0	1.25
Less Than 3 Hours	1.0	1.0	1.25	1.50
3 - 10 Hours	1.0	1.25	1.50	1.75
Over 10 Hours	1.25	1.50	1.75	2.00

Conversion Table for Single or Multi-Cylinder Engines to find Equivalent Single or Multi-Cylinder Service Factors

Hydraulic or Electric Motor	Single Cylinder Engines	Multi-Cylinder Engines
1.00	1.50	1.25
1.25	1.75	1.50
1.50	2.00	1.75
1.75	2.25	2.00
2.00	2.50	2.25

Load and operating characteristics of both the driver and driven units must be considered thoroughly when selecting speed reducers. It is essential that all speed reducers be selected for maximum load conditions to be encountered. Worm gear speed reducers will safely transmit momentary starting loads as great as 300% of the mechanical input ratings.

Input Horsepower, Output Torque, Overhung Load and Thrust Load for Raider® Plus Single Reduction Worm Gear Speed Reducers

Unit Size ■	Mechanical		Thermal		Maximum Overhung Lbs.	Max Thrust LoadLbs.
	Input hp	Output Torque	Input hp	Output Torque	Output Shaft	Output Shaft
1750 rpm Driver - 5:1 Ratio-350 rpm Output						
133	1.25	209	1.25	209	700	827
154	1.94	323	1.94	323	860	794
175	2.60	436	2.60	436	1200	793
206	3.66	615	3.66	615	1000	735
237	5.32	898	5.32	898	1770	1451
262	6.69	1130	6.69	1130	1625	1420
300	9.09	1544	9.09	1544	2170	1729
325	11.93	2033	11.93	2033	2275	1605
1750 rpm Driver - 10:1 Ratio-175 rpm Output						
133	0.82	263	0.82	263	700	1070
154	1.28	402	1.28	402	860	1056
175	1.63	528	1.63	528	1200	976
206	2.46	805	2.46	805	1065	898
237	3.56	1172	3.56	1172	1770	1820
262	4.49	1475	4.49	1475	1625	1762
300	6.15	2037	6.15	2037	2170	2147
325	8.09	2700	8.09	2700	2275	2026
375	9.81	3286	8.48	2841	1678	2335
375W/ fan	9.81	3286	9.64	3228	1678	2335
450	14.78	4981	11.52	3882	1549	4626
450W/fan	14.78	4981	14.40	4853	1549	4626
516	19.86	6729	14.94	5060	2531	3889
516W/fan	19.86	6729	18.66	6325	2531	3889
600	28.74	9722	21.70	7342	4417	5398
600W/fan	28.74	9722	25.84	8740	4417	5398
1750 rpm Driver - 15:1 Ratio - 116.6 rpm Output						
133	0.64	292	0.64	292	700	1144
154	1.00	446	1.00	446	860	1144
175	1.22	571	1.22	571	1200	1144
206	1.89	897	1.89	897	1125	1099
237	2.77	1318	2.77	1318	1770	2091
262	3.61	1737	3.61	1737	1625	2069
300	4.84	2329	4.84	2329	2170	2549
325	6.13	2980	6.13	2980	2275	2490
375	7.35	3572	5.88	2858	1678	2655
375W/ fan	7.35	3572	7.35	3572	1678	2655
450	11.09	5436	8.66	4246	1549	5346
450W/fan	11.09	5436	10.82	4962	1549	5346
516	15.01	7421	10.95	5412	2531	4449
516W/fan	15.01	7421	13.67	6764	2531	4449
600	21.19	10516	14.82	7355	4417	6198
600W/fan	21.19	10516	18.08	8970	4417	6198
1750 rpm Driver - 20:1 Ratio - 87.5 rpm Output						
133	0.55	320	0.55	320	700	1144
154	0.92	518	0.92	518	860	1144
175	1.05	630	1.05	630	1200	1144
206	1.58	964	1.58	964	1175	1144
237	2.33	1421	2.33	1421	1770	2091
262	2.97	1836	2.97	1836	1625	2091
300	3.95	2454	3.95	2454	2170	2574
325	5.18	3267	5.18	3267	2275	2574
375	6.01	3807	5.11	3235	1678	2895
375W/ fan	6.01	3807	6.01	3807	1678	2895
450	8.66	5544	7.28	4658	1549	5906
450W/fan	8.66	5544	8.66	5544	1549	5906
516	11.68	7557	9.33	6035	2531	4929
516W/fan	11.68	7557	11.11	7185	2531	4929
600	16.51	10696	13.20	8549	4417	6758
600W/fan	16.51	10696	15.71	10178	4417	6758

Unit Size ■	Mechanical		Thermal		Maximum Overhung Lbs.	Max. Thrust Load Lbs.
	Input hp	Output Torque	Input hp	Output Torque	Output Shaft	Output Shaft
1750 rpm Driver - 25:1 Ratio -70 rpm Output						
133	0.45	309	0.45	309	700	1144
154	0.75	503	0.75	506	860	1144
175	0.88	644	0.88	644	1200	1144
206	1.33	985	1.33	985	1210	1144
237	1.97	1451	1.97	1451	1770	2091
262	2.49	1869	2.49	1869	1625	2091
300	3.36	2527	3.36	2527	2170	2574
325	4.37	3360	4.37	3360	2275	2574
375	5.22	3878	4.46	3315	1678	3133
375W/ fan	5.22	3878	5.22	3878	1678	3133
450	7.45	5598	6.14	4589	1549	6305
450W/fan	7.45	5598	7.45	5598	1549	6305
516	10.05	7652	7.92	6013	2531	5252
516W/fan	10.05	7652	9.63	7337	2531	5252
600	14.16	10803	11.39	8697	4417	7281
600W/fan	14.16	10803	13.48	10293	4417	7281
1750 rpm Driver - 30:1 Ratio -58.3 rpm Output						
133	0.40	314	0.40	314	700	1144
154	0.63	478	0.63	478	860	1144
175	0.74	614	0.74	614	1200	1144
206	1.13	968	1.13	968	1255	1144
237	1.65	1423	1.65	1423	1770	2091
262	2.15	1883	2.15	1883	1625	2091
300	2.88	2519	2.88	2519	2170	2574
325	3.62	3226	3.62	3226	2275	2574
375	4.43	3949	3.81	3396	1678	3375
375W/ fan	4.43	3949	4.43	3949	1678	3375
450	6.23	5651	4.99	4521	1549	6706
450W/fan	6.23	5651	6.23	5651	1549	6706
516	8.43	7749	6.52	5992	2531	5569
516W/fan	8.43	7749	8.15	7490	2531	5569
600	11.80	10911	9.57	8846	4417	7798
600W/fan	11.80	10911	11.26	10408	4417	7798
1750 rpm Driver - 40:1 Ratio -43.7 rpm Output						
133	0.33	322	0.33	322	700	1144
154	0.56	520	0.56	520	860	1144
175	0.61	634	0.61	634	1200	1144
206	0.92	971	0.92	971	1315	1144
237	1.34	1433	1.34	1433	1770	2091
262	1.70	1854	1.70	1854	1625	2091
300	2.25	2477	2.25	2477	2170	2574
325	2.93	3303	2.93	3303	2275	2574
375	3.35	3818	2.84	3245	1678	3695
375W/ fan	3.35	3818	3.35	3818	1678	3695
450	4.96	5750	4.21	4888	1549	6820
450W/fan	4.96	5750	4.96	5750	1549	6820
516	6.39	7565	5.37	6354	2531	6209
516W/fan	6.39	7565	6.39	7565	2531	6209
600	9.05	10716	7.30	8641	4417	8518
600W/fan	9.05	10716	8.68	10287	4417	8518
1750 rpm Driver - 50:1 Ratio -35 rpm Output						
133	0.29	327	0.29	327	700	1144
154	0.46	494	0.46	494	860	1144
175	0.52	634	0.52	634	1200	1144
206	0.77	970	0.77	970	1385	1144
237	1.14	1432	1.14	1432	1770	2091
262	1.42	1843	1.42	1843	1625	2091
300	1.92	2490	1.92	2490	2170	2574

■ Basic unit size. See assembly drawings, pages C-19 - C-62, to determine components needed and complete the part numbers following the directions on that page.

Above ratings are not applicable when reducer shafts are subjected to combined overhung and thrust loads.
Find ratings for input speeds not shown by straight line interpolation.
Maximum overhung loads are at center of keyseats and on one end of output shaft only. Overhung loads applied closer to the reducer housing are desirable, but overhung loads farther out on the shaft and overhung loads on both ends of output shaft should be referred to Application Engineering.

Contact Application Engineering (1 800 626 2093).

Contact Application Engineering for the following:
1. High starting torques exceeding 300% of the reducer mechanical rating.
2. Frequent starting or repetitive shock applications.
3. Applications where high energy loads must be absorbed as when stalling.

Input Horsepower, Output Torque, Overhung Load and Thrust Load for Raider® Plus Single Reduction Worm Gear Speed Reducers

Unit Size ■	Mechanical		Thermal		Maximum Overhung Load Lbs.	Max. Thrust Load Lbs.
	Input hp	Output Torque	Input hp	Output Torque	Output Shaft	Output Shaft
1750 rpm Driver - 50:1 Ratio -35 rpm Output						
325	2.46	3315	2.46	3315	2275	2574
375	2.82	3818	2.45	3321	1678	4015
375W/ fan	2.82	3818	2.82	3818	1678	4015
450	3.99	5589	3.35	4694	1549	6820
450W/fan	3.99	5589	3.99	5589	1549	6820
516	5.12	7280	4.14	5896	2531	6689
516W/fan	5.12	7280	5.12	7280	2531	6689
600	7.07	10228	5.84	8456	4417	9238
600W/fan	7.07	10228	6.80	9833	4417	9238
1750 rpm Driver - 60:1 Ratio -29.1 rpm Output						
133	0.25	313	0.25	313	700	1144
154	0.39	462	0.39	462	860	1144
175	0.45	623	0.45	623	1200	1144
206	0.67	940	0.67	940	1415	1144
237	0.97	1418	0.97	1418	1770	2091
262	1.22	1805	1.22	1805	1625	2091
300	1.64	2413	1.64	2413	2170	2574
325	2.11	3274	2.11	3274	2275	2574
375	2.39	3761	1.93	3045	1678	4255
375W/ fan	2.39	3761	2.39	3761	1678	4255
450	3.39	5474	2.71	4379	1549	6820
450W/fan	3.39	5474	3.39	5474	1549	6820
516	4.13	6825	3.35	5528	2531	6820
516W/fan	4.13	6825	4.13	6825	2531	6820
600	5.83	9743	4.92	8216	4417	9798
600W/fan	5.83	9743	5.78	9666	4417	9798
1170 rpm Driver - 5:1 Ratio- 234 rpm Output						
133	0.95	235	0.95	235	700	827
154	1.54	379	1.54	379	860	794
175	1.88	466	1.88	466	1200	793
206	2.88	717	2.88	717	1000	735
237	4.28	1071	4.28	1071	1770	1451
262	5.44	1363	5.44	1363	1625	1420
300	7.43	1876	7.43	1876	2170	1729
325	9.79	2483	9.79	2483	2275	1605
1170 rpm Driver - 10:1 Ratio-117 rpm Output						
133	0.63	293	0.63	293	700	1070
154	1.01	468	1.01	468	860	1056
175	1.24	592	1.24	592	1200	976
206	1.91	917	1.91	917	1065	898
237	2.81	1364	2.81	1364	1770	1820
262	3.58	1738	3.58	1738	1625	1762
300	4.99	2446	4.99	2446	2170	2147
325	6.60	3268	6.60	3268	2275	2026
375	8.12	4045	7.07	3519	1678	2575
375W/ fan	8.12	4045	8.12	4045	1678	2575
450	12.20	6115	9.76	4892	1549	5106
450W/fan	12.20	6115	11.84	5936	1549	5106
516	16.23	8186	12.50	6303	2531	4289
516W/fan	16.23	8186	15.58	7859	2531	4289
600	23.15	11675	19.91	10041	4417	6038
600W/fan	23.15	11675	22.22	11208	4417	6038
1170 rpm Driver - 15:1 Ratio - 78 rpm Output						
133	0.49	325	0.49	325	700	1144
154	0.80	519	0.80	519	860	1144
175	0.95	645	0.95	645	1200	1144
206	1.46	1017	1.46	1017	1125	1099
237	2.18	1526	2.18	1526	1770	2091
262	2.82	1994	2.82	1994	1625	2069
300	3.90	2768	3.90	2768	2170	2549
325	5.03	3618	5.03	3618	2275	2490

Unit Size ■	Mechanical		Thermal		Maximum Overhung Load Lbs.	Max. Thrust Load Lbs.
	Input hp	Output Torque	Input hp	Output Torque	Output Shaft	Output Shaft
1170 rpm Driver - 15:1 Ratio - 78 rpm Output						
375	6.16	4425	5.05	3629	1678	2975
375W/ fan	6.16	4425	6.16	4425	1678	2975
450	9.23	6693	7.38	5355	1549	5906
450W/fan	9.23	6693	9.14	6626	1549	5906
516	12.29	9020	9.34	6856	2531	4929
516W/fan	12.29	9020	11.30	8299	2531	4929
600	17.08	12579	13.15	9686	4417	6918
600W/fan	17.08	12579	15.20	11194	4417	6918
1170 rpm Driver - 20:1 Ratio - 58.5 rpm Output						
133	0.42	354	0.42	354	700	1144
154	0.73	600	0.73	600	860	1144
175	0.80	702	0.80	702	1200	1144
206	1.23	1090	1.23	1090	1175	1144
237	1.84	1640	1.84	1640	1770	2091
262	2.34	2123	2.34	2123	1625	2091
300	3.20	2923	3.20	2923	2170	2574
325	4.22	3917	4.22	3917	2275	2574
375	4.82	4499	4.23	3959	1678	3295
375W/ fan	4.82	4499	4.85	4499	1678	3295
450	7.27	6856	6.25	5896	1549	6546
450W/fan	7.27	6856	7.27	6856	1549	6546
516	9.69	9252	7.85	7494	2531	5489
516W/fan	9.69	9252	9.30	8883	2531	5489
600	13.47	12917	11.18	10721	4417	7638
600W/fan	13.47	12917	12.94	12401	4417	7638
1170 rpm Driver - 25:1 Ratio-46.8 rpm Output						
133	0.34	344	0.34	344	700	1144
154	0.60	580	0.60	580	860	1144
175	0.68	713	0.68	713	1200	1144
206	1.03	1104	1.03	1104	1210	1144
237	1.55	1669	1.55	1669	1770	2091
262	1.96	2146	1.96	2146	1625	2091
300	2.71	2993	2.71	2993	2170	2574
325	3.54	3996	3.54	3996	2275	2574
375	4.82	4499	4.23	3959	1678	3295
375W/ fan	4.82	4499	4.82	4499	1678	3295
450	7.27	6856	6.25	5896	1549	6546
450W/fan	7.27	6856	7.27	6856	1549	6546
516	9.69	9252	7.85	7494	2531	5489
516W/fan	9.69	9252	9.30	8883	2531	5489
600	13.47	12917	11.18	10721	4417	7638
600W/fan	13.47	12917	12.94	12401	4417	7638
1170 rpm Driver - 30:1 Ratio - 39 rpm Output						
133	0.31	348	0.31	348	700	1144
154	0.51	555	0.51	555	860	1144
175	0.58	692	0.58	692	1200	1144
206	0.88	1095	0.88	1095	1255	1144
237	1.31	1642	1.31	1642	1770	2091
262	1.69	2152	1.69	2152	1625	2091
300	2.34	2982	2.34	2982	2170	2574
325	2.99	3902	2.99	3902	2275	2574
375	3.53	4582	3.04	3940	1678	3775
375W/ fan	3.53	4582	3.53	4582	1678	3775
450	5.25	6937	4.31	5690	1549	6820
450W/fan	5.25	6937	5.25	6937	1549	6820
516	7.01	9412	5.61	7530	2531	6289
516W/fan	7.01	9412	6.52	8754	2531	6289
600	9.64	13066	8.20	11106	4417	8678
600W/fan	9.64	13066	8.97	12151	4417	8678

■ Basic unit size. See assembly drawings, pages C-19 - C-62, to determine components needed and complete the part numbers following the directions on that page.

Above ratings are not applicable when reducer shafts are subjected to combined overhung and thrust loads.
Find ratings for input speeds not shown by straight line interpolation.
Maximum overhung loads are at center of keyseats and on one end of output shaft only. Overhung loads applied closer to the reducer housing are desirable, but overhung loads farther out on the shaft and overhung loads on both ends of output shaft should be referred to Application Engineering (1 800 626 2093).

Contact Application Engineering (1 800 626 2093).

Contact Application Engineering for the following:
1. High starting torques exceeding 300% of the reducer mechanical rating.
2. Frequent starting or repetitive shock applications.
3. Applications where high energy loads must be absorbed as when stalling.

Input Horsepower, Output Torque, Overhung Load and Thrust Load for Raider® Plus Single Reduction Worm Gear Speed Reducers

Unit Size ■	Mechanical		Thermal		Maximum Overhung Lbs.	Max Thrust LoadLbs.
	Input hp	Output Torque	Input hp	Output Torque	Output Shaft	Output Shaft
1170 rpm Driver - 40:1 Ratio - 29.3 rpm Output						
133	0.26	355	0.26	355	700	1144
154	0.46	601	0.46	601	860	1144
175	0.48	706	0.48	706	1200	1144
206	0.72	1097	0.72	1097	1315	1144
237	1.07	1650	1.07	1650	1770	2091
262	1.35	2139	1.35	2139	1625	2091
300	1.84	2944	1.84	2944	2170	2574
325	2.40	3950	2.40	3950	2275	2574
375	2.73	4516	2.37	3929	1678	4175
375W/ fan	2.73	4516	2.73	4516	1678	4175
450	4.10	6887	3.53	5923	1549	6820
450W/fan	4.10	6887	4.10	6887	1549	6820
516	5.41	9300	4.38	7533	2531	6820
516W/fan	5.41	9300	5.20	8929	2531	6820
600	7.53	13003	6.32	10922	4417	9558
600W/fan	7.53	13003	7.22	12484	4417	9558
1170 rpm Driver - 50:1 Ratio - 23.4 rpm Output						
133	0.22	359	0.22	359	700	1144
154	0.38	569	0.38	569	860	1144
175	0.40	701	0.40	701	1200	1144
206	0.61	1086	0.61	1086	1385	1144
237	0.91	1641	0.91	1641	1770	2091
262	1.14	2112	1.14	2112	1625	2091
300	1.57	2945	1.57	2945	2170	2574
325	2.02	3935	2.02	3935	2275	2574
375	2.22	4333	1.95	3814	1678	4495
375W/ fan	2.22	4333	2.22	4333	1678	4495
450	3.30	6610	2.84	5685	1549	6820
450W/fan	3.30	6610	3.30	6610	1549	6820
516	4.32	8966	3.58	7441	2531	6820
516W/fan	4.32	8966	4.32	8966	2531	6820
600	5.98	12488	5.03	10490	4417	10358
600W/fan	5.98	12488	5.86	12238	4417	10358
1170 rpm Driver - 60:1 Ratio - 19.5 rpm Output						
133	0.20	345	0.20	345	700	1144
154	0.32	532	0.32	532	860	1144
175	0.35	689	0.35	689	1200	1144
206	0.54	1061	0.54	1061	1415	1144
237	0.77	1604	0.77	1604	1770	2091
262	0.97	2060	0.97	2060	1625	2091
300	1.35	2854	1.35	2854	2170	2574
325	1.73	3869	1.73	3869	2275	2574
375	1.81	4094	1.52	3438	1678	4815
375W/ fan	1.81	4094	1.81	4094	1678	4815
450	2.70	6246	2.24	5184	1549	6820
450W/fan	2.70	6246	2.70	6246	1549	6820
516	3.57	8501	2.97	7056	2531	6820
516W/fan	3.57	8501	3.57	8501	2531	6820
600	4.95	11852	4.21	10080	4417	10998
600W/fan	4.95	11852	4.95	11852	4417	10998
870 rpm Driver - 5:1 Ratio- 174 rpm Output						
133	0.76	251	0.76	251	700	827
154	1.26	414	1.26	414	860	794
175	1.52	502	1.52	502	1200	793
206	2.35	779	2.35	779	1000	735
237	3.53	1179	3.53	1179	1770	1451
262	4.52	1510	4.52	1510	1625	1420
300	6.25	2108	6.25	2108	2170	1729
325	8.29	2812	8.29	2812	2275	1605
375	6.01	3807	5.11	3235	1678	2895

Unit Size ■	Mechanical		Thermal		Maximum Overhung Lbs.	Max Thrust LoadLbs.
	Input hp	Output Torque	Input hp	Output Torque	Output Shaft	Output Shaft
870 rpm Driver - 10:1 Ratio-87 rpm Output						
133	0.50	310	0.50	310	700	1070
154	0.83	509	0.83	509	860	1056
175	1.00	629	1.00	629	1200	976
206	1.54	984	1.54	984	1065	898
237	2.30	1480	2.30	1480	1770	1820
262	2.94	1900	2.94	1900	1625	1762
300	4.14	2703	4.14	2703	2170	2147
325	5.50	3626	5.50	3626	2275	2026
375	6.80	4596	5.56	3703	1678	2825
375W/ fan	6.80	4596	6.12	4040	1678	2825
450	10.39	7096	8.42	5773	1549	5606
450W/fan	10.39	7096	10.13	6932	1549	5606
516	13.99	9650	11.01	7628	2531	4689
516W/fan	13.99	9650	12.41	8408	2531	4689
600	20.21	13983	17.62	12217	4417	6538
600W/fan	20.21	13983	19.63	13616	4417	6538
870 rpm Driver - 15:1 Ratio - 58 rpm Output						
133	0.40	344	0.40	344	700	1144
154	0.66	563	0.66	563	860	1144
175	0.77	689	0.77	689	1200	1144
206	1.18	1088	1.18	1088	1125	1099
237	1.78	1652	1.78	1652	1770	2091
262	2.30	2149	2.30	2149	1625	2069
300	3.23	3041	3.23	3041	2170	2549
325	4.21	4023	4.21	4023	2275	2490
375	5.18	5034	4.30	4196	1678	3225
375W/ fan	5.18	5034	4.97	4793	1678	3225
450	7.91	7780	6.41	6329	1549	6456
450W/fan	7.91	7780	7.36	7154	1549	6456
516	10.65	10654	8.22	8243	2531	5429
516W/fan	10.65	10654	9.09	8945	2531	5429
600	15.02	15100	11.83	11938	4417	7568
600W/fan	15.02	15100	13.25	13285	4417	7568
870 rpm Driver - 20:1 Ratio - 43.5 rpm Output						
133	0.34	373	0.34	373	700	1144
154	0.61	649	0.61	649	860	1144
175	0.65	744	0.65	744	1200	1144
206	1.00	1165	1.00	1165	1175	1144
237	1.51	1772	1.51	1772	1770	2091
262	1.92	2296	1.92	2296	1625	2091
300	2.66	3215	2.66	3215	2170	2574
325	3.51	4323	3.51	4323	2275	2574
375	4.05	5077	3.60	4536	1678	3595
375W/ fan	4.05	5077	4.06	5082	1678	3595
450	6.17	7865	5.38	6870	1549	6717
450W/fan	6.17	7865	5.90	7453	1549	6717
516	8.33	10795	6.80	8817	2531	5989
516W/fan	8.33	10795	7.49	9573	2531	5989
600	11.84	15433	10.26	13480	4417	8338
600W/fan	11.84	15433	11.17	14498	4417	8338
870 rpm Driver - 25:1 Ratio-34.8 rpm Output						
133	0.28	364	0.28	364	700	1144
154	0.50	627	0.50	627	860	1144
175	0.55	753	0.55	753	1200	1144
206	0.84	1174	0.84	1174	1210	1144
237	1.28	1798	1.28	1798	1770	2091
262	1.61	2312	1.61	2312	1625	2091
300	2.26	3282	2.26	3282	2170	2574
325	2.95	4392	2.95	4392	2275	2574
375	6.01	3807	5.11	3235	1678	2895

■ Basic unit size. See assembly drawings, pages C-19 - C-62, to determine components needed and complete the part numbers following the directions on that page.

Above ratings are not applicable when reducer shafts are subjected to combined overhung and thrust loads.
Find ratings for input speeds not shown by straight line interpolation.
Maximum overhung loads are at center of keyseats and on one end of output shaft only. Overhung loads applied closer to the reducer housing are desirable, but overhung loads farther out on the shaft and overhung loads on both ends of output shaft should be referred to Application Engineering.

Contact Application Engineering (1 800 626 2093).

Contact Application Engineering for the following:
1. High starting torques exceeding 300% of the reducer mechanical rating.
2. Frequent starting or repetitive shock applications.
3. Applications where high energy loads must be absorbed as when stalling.

Input Horsepower, Output Torque, Overhung Load and Thrust Load for Raider® Plus Single Reduction Worm Gear Speed Reducers

Unit Size ■	Mechanical		Thermal		Maximum Overhung Lbs.	Max Thrust LoadLbs.
	Input hp	Output Torque	Input hp	Output Torque	Output Shaft	Output Shaft
870 rpm Driver - 25:1 Ratio-34.8 rpm Output						
375	3.72	5127	3.29	4545	1678	3767
375W/ fan	3.72	5127	3.72	5127	1678	3767
450	5.65	7942	4.86	6828	1549	6717
450W/fan	5.65	7942	5.53	7735	1549	6717
516	7.60	10895	6.03	8586	2531	6321
516W/fan	7.60	10895	6.77	9479	2531	6321
600	10.75	15541	9.19	13396	4417	8741
600W/fan	10.75	15541	10.03	14394	4417	8741
870 rpm Driver - 30:1 Ratio - 29 rpm Output						
133	0.25	368	0.25	368	700	1144
154	0.43	602	0.43	602	860	1144
175	0.48	738	0.48	738	1200	1144
206	0.72	1169	0.72	1169	1255	1144
237	1.09	1775	1.09	1775	1770	2091
262	1.39	2312	1.39	2312	1625	2091
300	1.95	3269	1.95	3269	2170	2574
325	2.52	4329	2.52	4329	2275	2574
375	3.01	5205	2.63	4546	1678	4125
375W/ fan	3.01	5205	3.01	5205	1678	4125
450	4.54	8049	3.77	6710	1549	6820
450W/fan	4.54	8049	4.54	8049	1549	6820
516	6.12	11051	4.67	8364	2531	6621
516W/fan	6.12	11051	5.25	9322	2531	6621
600	8.58	15700	7.35	13453	4417	9528
600W/fan	8.58	15700	7.80	14195	4417	9528
870 rpm Driver - 40:1 Ratio - 21.8 rpm Output						
133	0.21	375	0.21	375	700	1144
154	0.39	651	0.39	651	860	1144
175	0.39	748	0.39	748	1200	1144
206	0.60	1172	0.60	1172	1315	1144
237	0.90	1782	0.90	1782	1770	2091
262	1.13	2311	1.13	2311	1625	2091
300	1.55	3234	1.55	3234	2170	2574
325	2.02	4353	2.02	4353	2275	2574
375	2.32	5077	2.03	4450	1678	4575
375W/ fan	2.32	5077	2.32	5077	1678	4575
450	3.51	7867	3.02	6766	1549	6820
450W/fan	3.51	7867	3.38	7512	1549	6820
516	4.70	10833	3.81	8774	2531	6820
516W/fan	4.70	10833	4.18	9472	2531	6820
600	6.67	15451	5.64	13068	4417	10508
600W/fan	6.67	15451	6.11	14032	4417	10508
870 rpm Driver - 50:1 Ratio - 17.4 rpm Output						
133	0.19	377	0.19	377	700	1144
154	0.32	615	0.32	615	860	1144
175	0.34	740	0.34	740	1200	1144
206	0.50	1154	0.50	1154	1385	1144
237	0.76	1767	0.76	1767	1770	2091
262	0.95	2274	0.95	2274	1625	2091
300	1.32	3227	1.32	3227	2170	2574
325	1.70	4321	1.70	4321	2275	2574
375	1.88	4834	1.65	4255	1678	4945
375W/ fan	1.88	4834	1.88	4834	1678	4945
450	2.83	7529	2.44	6476	1549	6820
450W/fan	2.83	7529	2.83	7529	1549	6820
516	3.75	10332	3.09	8497	2531	6820
516W/fan	3.75	10332	3.49	9475	2531	6820
600	5.26	14676	4.39	12223	4417	11358
600W/fan	5.26	14676	4.90	13544	4417	11358

Unit Size ■	Mechanical		Thermal		Maximum Overhung Lbs.	Max Thrust LoadLbs.
	Input hp	Output Torque	Input hp	Output Torque	Output Shaft	Output Shaft
870 rpm Driver - 60:1 Ratio - 14.5 rpm Output						
133	0.16	362	0.16	362	700	1144
154	0.28	574	0.28	574	860	1144
175	0.30	728	0.30	728	1200	1144
206	0.45	1133	0.45	1133	1415	1144
237	0.64	1714	0.64	1714	1770	2091
262	0.81	2213	0.81	2213	1625	2091
300	1.14	3126	1.14	3126	2170	2574
325	1.46	4236	1.46	4236	2275	2574
375	1.54	4547	1.30	3819	1678	5315
375W/ fan	1.54	4547	1.54	4547	1678	5315
450	2.33	7077	1.93	5873	1549	6820
450W/fan	2.33	7077	2.33	7077	1549	6820
516	3.08	9739	2.56	8084	2531	6820
516W/fan	3.08	9739	2.98	9359	2531	6820
600	4.38	13928	3.59	11381	4417	11929
600W/fan	4.38	13928	4.08	12832	4417	11929
100 rpm Driver - 5:1 Ratio- 20 rpm Output						
133	0.14	298	0.14	298	700	827
154	0.24	526	0.24	526	860	794
175	0.24	612	0.24	612	1200	793
206	0.39	980	0.39	980	1000	735
237	0.66	1540	0.66	1540	1770	1451
262	0.84	2010	0.84	2010	1625	1420
300	1.18	2925	1.18	2925	2170	1729
325	1.55	3995	1.55	3995	2275	1605
100 rpm Driver - 10:1 Ratio-10 rpm Output						
133	0.10	363	0.10	363	700	1070
154	0.18	639	0.18	639	860	1056
175	0.20	744	0.20	744	1200	976
206	0.30	1192	0.30	1192	1065	898
237	0.44	1857	0.44	1857	1770	1820
262	0.57	2431	0.57	2431	1625	1762
300	0.80	3573	0.80	3573	2170	2147
325	1.05	4853	1.05	4853	2275	2026
375	1.06	5508	1.06	5508	1678	5615
375W/ fan	1.06	5508	1.06	5508	1678	5615
450	1.73	9126	1.73	9126	1549	6820
450W/fan	1.73	9126	1.73	9126	1549	6820
516	2.16	11556	2.16	11556	2531	6820
516W/fan	2.16	11556	2.16	11556	2531	6820
600	3.77	19948	3.77	19948	4417	12487
600W/fan	3.77	19948	3.77	19948	4417	12487
100 rpm Driver - 15:1 Ratio - 6.7 rpm Output						
133	0.09	401	0.09	401	700	1144
154	0.16	706	0.16	706	860	1144
175	0.17	823	0.17	823	1200	1144
206	0.25	1309	0.25	1309	1125	1099
237	0.37	2056	0.37	2056	1770	2091
262	0.47	2637	0.47	2637	1625	2069
300	0.66	3949	0.66	3949	2170	2549
325	0.85	5413	0.85	5413	2275	2490
375	0.76	5508	0.76	5508	1678	6244
375W/ fan	0.76	5508	0.76	5508	1678	6244
450	1.23	9126	1.23	9126	1549	6820
450W/fan	1.23	9126	1.23	9126	1549	6820
516	1.53	11556	1.53	11556	2531	6820
516W/fan	1.53	11556	1.53	11556	2531	6820
600	2.79	21060	2.79	21060	4417	12487
600W/fan	2.79	21060	2.79	21060	4417	12487

■ Basic unit size. See assembly drawings, pages C-19 - C-62, to determine components needed and complete the part numbers following the directions on that page.

Above ratings are not applicable when reducer shafts are subjected to combined overhung and thrust loads.
Find ratings for input speeds not shown by straight line interpolation.
Maximum overhung loads are at center of keyseats and on one end of output shaft only. Overhung loads applied closer to the reducer housing are desirable, but overhung loads farther out on the shaft and overhung loads on both ends of output shaft should be referred to Application Engineering.

Contact Application Engineering (1 800 626 2093).

Contact Application Engineering for the following:
1. High starting torques exceeding 300% of the reducer mechanical rating.
2. Frequent starting or repetitive shock applications.
3. Applications where high energy loads must be absorbed as when stalling.

Input Horsepower, Output Torque, Overhung Load and Thrust Load for Raider® Plus Single Reduction Worm Gear Speed Reducers

Unit Size ■	Mechanical		Thermal		Maximum Overhung Lbs.	Max Thrust LoadLbs.
	Input hp	Output Torque	Input hp	Output Torque	Output Shaft	Output Shaft
100 rpm Driver - 20:1 Ratio - 5 rpm Output						
133	0.08	431	0.08	431	700	1144
154	0.16	807	0.16	807	860	1144
175	0.15	872	0.15	872	1200	1144
206	0.23	1397	0.23	1397	1175	1144
237	0.34	2193	0.34	2193	1770	2091
262	0.42	2849	0.42	2849	1625	2091
300	0.58	4189	0.58	4189	2170	2574
325	0.75	5695	0.75	5695	2275	2574
375	0.59	5508	0.59	5508	1678	6244
375W/ fan	0.59	5508	0.59	5508	1678	6244
450	0.98	9126	0.98	9126	1549	6820
450W/fan	0.98	9126	0.98	9126	1549	6820
516	1.21	11556	1.21	11556	2531	6820
516W/fan	1.21	11556	1.21	11556	2531	6820
600	2.25	21384	2.25	21384	4417	12487
600W/fan	2.25	21384	2.25	21384	4417	12487
100 rpm Driver - 25:1 Ratio-4 rpm Output						
133	0.07	423	0.07	423	700	1144
154	0.14	775	0.14	775	860	1144
175	0.14	874	0.14	874	1200	1144
206	0.20	1386	0.20	1386	1210	1144
237	0.30	2205	0.30	2205	1770	2091
262	0.37	2837	0.37	2837	1625	2091
300	0.52	4238	0.52	4238	2170	2574
325	0.66	5710	0.66	5710	2275	2574
375	0.50	5508	0.50	5508	1678	6244
375W/ fan	0.50	5508	0.50	5508	1678	6244
450	0.85	9126	0.85	9126	1549	6820
450W/fan	0.85	9126	0.85	9126	1549	6820
516	1.06	11723	1.06	11723	2531	6820
516W/fan	1.06	11723	1.06	11723	2531	6820
600	1.95	21763	1.95	21763	4417	12487
600W/fan	1.95	21763	1.95	21763	4417	12487
100 rpm Driver - 30:1 Ratio - 3.3 rpm Output						
133	0.07	429	0.07	429	700	1144
154	0.12	754	0.12	754	860	1144
175	0.13	880	0.13	880	1200	1144
206	0.18	1399	0.18	1399	1255	1144
237	0.27	2197	0.27	2197	1770	2091
262	0.34	2816	0.34	2816	1625	2091
300	0.47	4217	0.47	4217	2170	2574
325	0.59	5787	0.59	5787	2275	2574
375	0.45	5508	0.45	5508	1678	6244
375W/ fan	0.45	5508	0.45	5508	1678	6244
450	0.75	9126	0.75	9126	1549	6820
450W/fan	0.75	9126	0.75	9126	1549	6820
516	0.94	11880	0.94	11880	2531	6820
516W/fan	0.94	11880	0.94	11880	2531	6820
600	1.75	22140	1.75	22140	4417	12487
600W/fan	1.75	22140	1.75	22140	4417	12487

Unit Size ■	Mechanical		Thermal		Maximum Overhung Lbs.	Max Thrust LoadLbs.
	Input hp	Output Torque	Input hp	Output Torque	Output Shaft	Output Shaft
100 rpm Driver - 40:1 Ratio - 2.5 rpm Output						
133	0.07	432	0.07	432	700	1144
154	0.12	808	0.12	808	860	1144
175	0.11	874	0.11	874	1200	1144
206	0.17	1401	0.17	1401	1315	1144
237	0.25	2198	0.25	2198	1770	2091
262	0.30	2857	0.30	2857	1625	2091
300	0.41	4200	0.41	4200	2170	2574
325	0.51	5710	0.51	5710	2275	2574
375	0.38	5508	0.38	5508	1678	6244
375W/ fan	0.38	5508	0.38	5508	1678	6244
450	0.60	9126	0.60	9126	1549	6820
450W/fan	0.60	9126	0.60	9126	1549	6820
516	0.75	11556	0.75	11556	2531	6820
516W/fan	0.75	11556	0.75	11556	2531	6820
600	1.33	20520	1.33	20520	4417	12487
600W/fan	1.33	20520	1.33	20520	4417	12487
100 rpm Driver - 50:1 Ratio - 2 rpm Output						
133	0.06	431	0.06	431	700	1144
154	0.11	760	0.11	760	860	1144
175	0.10	857	0.10	857	1200	1144
206	0.15	1359	0.15	1359	1385	1144
237	0.22	2163	0.22	2163	1770	2091
262	0.27	2783	0.27	2783	1625	2091
300	0.37	4156	0.37	4156	2170	2574
325	0.46	5601	0.46	5601	2275	2574
375	0.32	5508	0.32	5508	1678	6244
375W/ fan	0.32	5508	0.32	5508	1678	6244
450	0.53	9126	0.53	9126	1549	6820
450W/fan	0.53	9126	0.53	9126	1549	6820
516	0.64	11556	0.64	11556	2531	6820
516W/fan	0.64	11556	0.64	11556	2531	6820
600	1.06	19440	1.06	19440	4417	12487
600W/fan	1.06	19440	1.06	19440	4417	12487
100 rpm Driver - 60:1 Ratio - 1.7 rpm Output						
133	0.06	415	0.06	415	700	1144
154	0.10	707	0.10	707	860	1144
175	0.10	842	0.10	842	1200	1144
206	0.15	1354	0.15	1354	1415	1144
237	0.20	2054	0.20	2054	1770	2091
262	0.25	2689	0.25	2689	1625	2091
300	0.34	4026	0.34	4026	2170	2574
325	0.41	5448	0.41	5448	2275	2574
375	0.28	5508	0.28	5508	1678	6224
375W/ fan	0.28	5508	0.28	5508	1678	6224
450	0.44	9126	0.44	9126	1549	6820
450W/fan	0.44	9126	0.44	9126	1549	6820
516	0.54	11556	0.54	11556	2531	6820
516W/fan	0.54	11556	0.54	11556	2531	6820
600	0.86	18360	0.86	18360	4417	12487
600W/fan	0.86	18360	0.86	18360	4417	12487

■ Basic unit size. See assembly drawings, pages C-19 - C-62, to determine components needed and complete the part numbers following the directions on that page.

Above ratings are not applicable when reducer shafts are subjected to combined overhung and thrust loads.
Find ratings for input speeds not shown by straight line interpolation.
Maximum overhung loads are at center of keyseats and on one end of output shaft only. Overhung loads applied closer to the reducer housing are desirable, but overhung loads farther out on the shaft and overhung loads on both ends of output shaft should be referred to Application Engineering.

Contact Application Engineering (1 800 626 2093).

Contact the Application Engineering for the following:
1. High starting torques exceeding 300% of the reducer mechanical rating.
2. Frequent starting or repetitive shock applications.
3. Applications where high energy loads must be absorbed as when stalling.

Complete Gearing Solutions...

Regal Has the Industry's Broadest Line of Standard Gearmotors and Speed Reducers

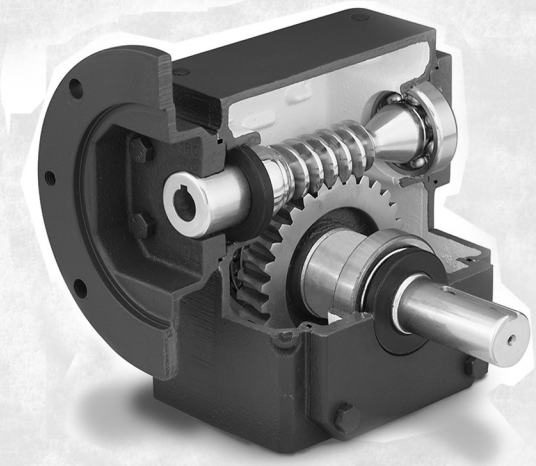

Morse
Raider® Plus
Worm Gear Reducer

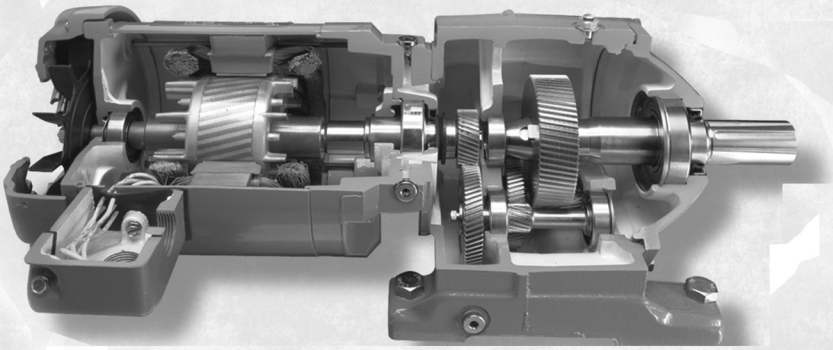

Browning
CbN In-line
Concentric Gearmotor



Morse
PoweRgear®
Worm Gear Reducer



Browning
TORQTAPER *Plus*®
Shaft Mount Speed Reducer

Style U

Universal —Basic Unit

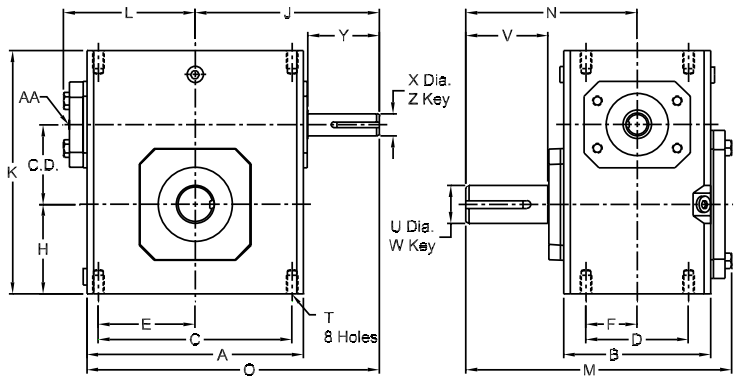

Assembly Drawing and Sample of Components

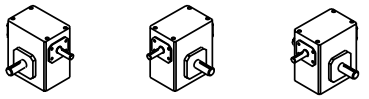

133UL10 133UR10 133ULR10

Style UT

Universal Worm Top

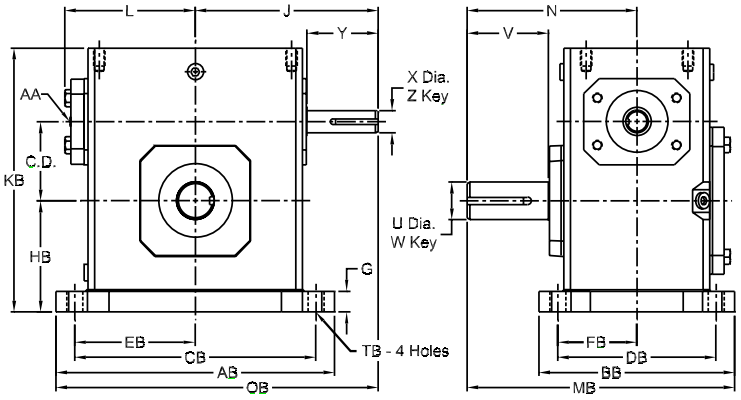

Assembly Drawing and Sample of Components

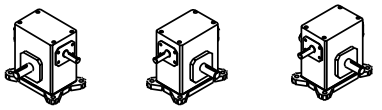

133UL10 133S-BK 133UR10 133S-BK 133ULR10 133S-BK

Style UB

Universal Worm Bottom

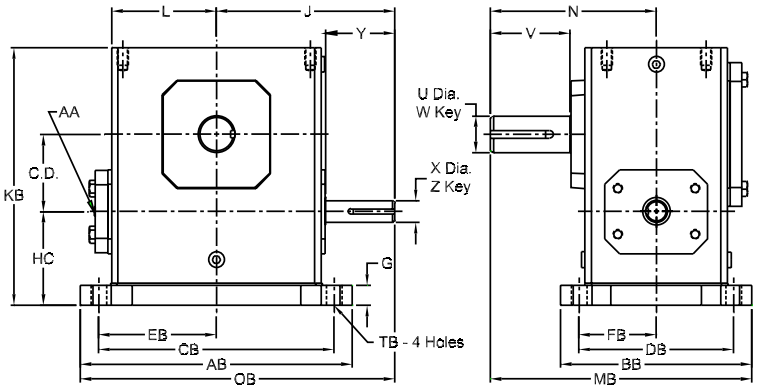

Assembly Drawing and Sample of Components

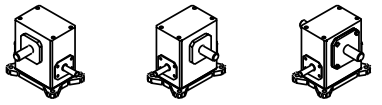

133UR10 133S-BK 133UL10 133S-BK 133ULR10 133S-BK

Dimensions (Inches) for Style "U"

CD	Basic Unit ★	A	B	C	D	E	F	H	J	K	L	M	N	O
1.33	133U	3.80	2.82	3.25	2.00	1.63	1.00	1.72	3.82	4.66	2.61	6.06	4.00	5.72
1.54	154U	4.88	3.44	4.19	2.75	2.09	1.38	1.91	4.35	5.38	3.14	6.72	4.31	6.79
1.75	175U	5.06	3.56	4.19	2.75	2.09	1.38	2.06	4.45	5.75	3.24	6.78	4.31	6.98
2.06	206U	5.80	3.81	5.00	2.88	2.50	1.44	2.28	4.82	6.38	3.61	7.28	4.68	7.72
2.37	237U	6.12	4.06	5.00	2.88	2.50	1.44	2.50	5.51	6.94	3.77	7.84	5.14	8.57
2.63	262U	7.12	4.84	6.38	3.38	3.19	1.69	2.94	6.07	8.00	4.34	8.74	5.63	9.63
3.00	300U	8.12	5.25	7.00	4.00	3.50	2.00	3.25	6.57	8.88	4.84	10.14	6.75	10.63
3.25	325U	8.50	5.75	7.50	4.00	3.75	2.00	3.50	6.76	9.38	5.02	10.70	7.06	11.01
3.75	375U	9.50	6.38	8.50	4.75	4.25	2.38	3.88	8.38	10.44	5.74	11.88	7.75	13.13
4.50	450U	10.88	7.38	9.56	5.81	4.78	2.91	4.50	9.59	11.94	6.42	13.16	8.44	15.09
5.16	516U	12.50	7.38	11.00	5.81	5.50	2.91	5.31	10.69	13.75	7.42	13.91	9.06	16.94
6.00	600U	14.50	8.13	12.75	6.38	6.38	3.19	6.50	11.75	16.50	8.25	15.31	10.00	19.00

CD	OUTPUT SHAFT						INPUT SHAFT				Stocked Ratios marked "x"									
	T	Deep	U	V	W Key		X	Y	Z Key		5	7.5	10	15	20	25	30	40	50	60
					Sq.	Lgth.			Sq.	Lgth.										
1.33	5/16 - 18	0.50	0.63	1.94	0.19	1.50	0.50	1.76	0.13	1.00	x	x	x	x	x	x	x	x	x	x
1.54	5/16 - 18	0.63	0.75	1.90	0.19	1.50	0.63	1.76	0.19	1.38	x	x	x	x	x	x	x	x	x	x
1.75	5/16 - 18	0.63	0.88	1.84	0.19	1.38	0.63	1.76	0.19	1.38	x	x	x	x	x	x	x	x	x	x
2.06	5/16 - 18	0.63	1.00	2.08	0.25	1.44	0.63	1.76	0.19	1.38	x	x	x	x	x	x	x	x	x	x
2.37	3/8 - 16	0.69	1.13	2.44	0.25	1.75	0.75	2.38	0.19	1.63	x	x	x	x	x	x	x	x	x	x
2.63	3/8 - 16	0.69	1.13	2.52	0.25	1.75	0.75	2.38	0.19	1.63	x	x	x	x	x	x	x	x	x	x
3.00	7/16 - 14	0.88	1.25	3.36	0.25	1.75	0.88	2.38	0.19	1.63	x	x	x	x	x	x	x	x	x	x
3.25	7/16 - 14	0.88	1.38	3.42	0.31	2.63	0.88	2.38	0.19	1.63	x	x	x	x	x	x	x	x	x	x
3.75	1/2 - 13	1.00	1.63	3.50	0.38	2.81	1.00	2.91	0.25	1.75	-	-	x	x	x	x	x	x	x	x
4.50	5/8 - 11	1.00	1.63	3.38	0.38	2.50	1.13	3.48	0.25	2.50	-	-	x	x	x	x	x	x	x	x
5.16	5/8 - 11	1.00	2.00	4.16	0.50	2.81	1.25	3.75	0.25	2.56	-	-	x	x	x	x	x	x	x	x
6.00	5/8 - 11	1.00	2.25	4.56	0.50	3.50	1.50	3.75	0.38	2.94	x	-	x	x	x	x	x	x	x	x

Dimensions (Inches) for Style "UT" - With Base - Worm Top

Components ◆		AB	BB	CB	DB	EB	FB	G	HB	KB	MB	OB	TB
Basic Unit ★	Base Kit ▲												
133U	133S-BK	5.37	5.38	4.37	3.31	2.19	1.66	0.53	2.25	5.19	6.69	6.51	0.34
154U	154S-BK	6.50	5.56	5.25	4.31	2.63	2.16	0.59	2.50	5.97	7.09	7.60	0.41
175U	175S-BK	6.99	5.75	5.75	4.50	2.88	2.25	0.69	2.75	6.44	7.19	7.95	0.41
206U	206S-BK	7.69	6.00	6.38	4.69	3.19	2.34	0.72	3.00	7.09	7.68	8.67	0.47
237U	237S-BK	8.37	6.19	7.06	4.88	3.53	2.44	0.75	3.25	7.69	8.24	9.70	0.49
262U	262S-BK	9.25	6.50	8.00	5.25	4.00	2.63	0.75	3.69	8.75	8.88	10.70	0.53
300U	300S-BK	10.00	7.50	8.44	5.88	4.22	2.94	0.75	4.00	9.63	10.50	11.57	0.53
325U	325S-BK	11.12	7.75	9.50	6.13	4.75	3.06	0.81	4.38	10.25	10.94	12.32	0.53
375U	375S-BK	12.00	8.63	10.38	7.00	5.19	3.50	0.94	4.81	11.38	12.06	14.38	0.59
450U	450S-BK	13.88	9.31	12.13	7.63	6.06	3.81	1.13	5.63	13.06	13.13	16.53	0.66
516U	516S-BK	16.38	10.38	14.13	8.38	7.06	4.19	1.13	6.44	14.88	14.25	18.88	0.78
600U	600S-BK	19.00	12.00	16.50	9.50	8.25	4.75	1.25	7.75	17.75	16.00	21.25	0.91

Dimensions (Inches) for Style "UB"

Components ◆		HC
Basic Unit ★	Base Kit ▲	
133U	133S-BK	2.14
154U	154S-BK	2.52
175U	175S-BK	2.63
206U	206S-BK	2.75
237U	237S-BK	2.81
262U	262S-BK	3.19
300U	300S-BK	3.38
325U	325S-BK	3.50
375U	375S-BK	3.75
450U	450S-BK	4.06
516U	516S-BK	4.40
600U	600S-BK	5.25

Fan Kit

Basic Unit ★	Fan Kit	AA		L	Wt. Lbs.
		Tap	Deep		
375U	375 FAN	3/8-24	3/4	7.66	2.8
450U	450 FAN	3/8-24	3/4	8.36	2.8
516U	516 FAN	3/8-24	3/4	9.18	2.8
600U	600 FAN	3/8-24	3/4	10.70	4.2

★ To complete Part No. add shaft assembly (L, R, LR) and ratio symbol to size - for example 133ULR10.
♦ Components needed to make assembled reducer must be ordered separately. If Fan Kit is required, see the table above.
▲ Standard Base Kit (S-BK) base kits are shown on page C-65.
Consult factory for ratios not shown as standard.

Style Q

C-Face Quilled – Basic Unit

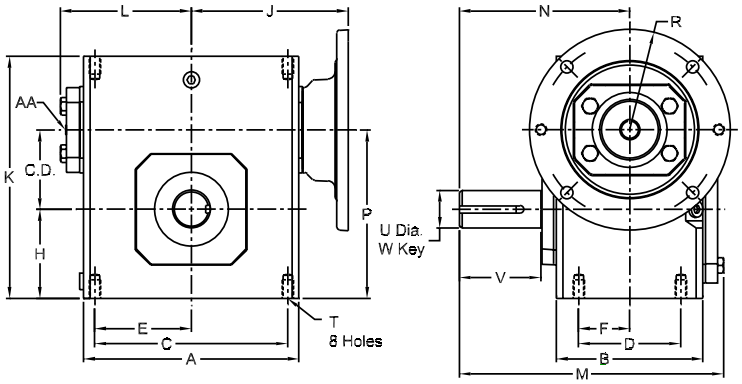

Assembly Drawing and Sample of Components

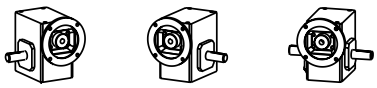

133Q56L10 133Q56R10 133Q56LR10

Style QT

Worm Top

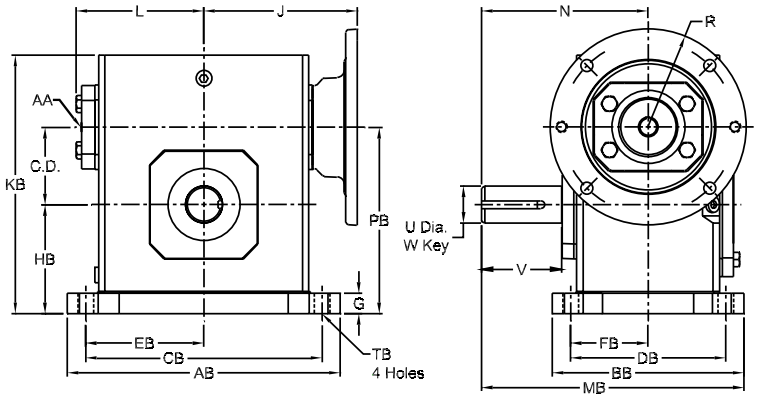

Assembly Drawing and Sample of Components



133Q56L10 133Q56R10 133Q56LR10
133S-BK 133S-BK 133S-BK

Style QB

Worm Bottom

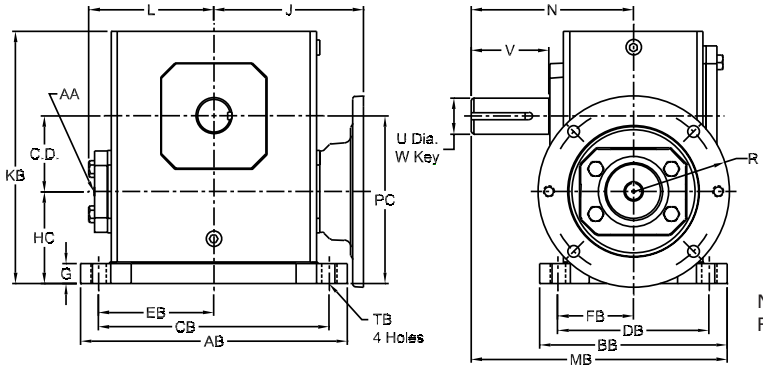

Assembly Drawing and Sample of Components



133Q56R10 133Q56L10 133Q56LR10
133S-BK 133S-BK 133S-BK

Note: When mounting Style "QB", interference may occur; use a Riser Block or consult Application Engineering (1 800 626 2093).

Dimensions (Inches) for Style "Q"

C.D.	Basic Unit★	NEMA.Frame	A	B	C	D	E	F	H	J	K	L	M	N	P	R
1.33	133Q56	56C	3.80	2.82	3.25	2.00	1.63	1.00	1.72	3.46	4.66	2.61	6.06	4.00	3.05	3.25
1.54	154Q56	56C	4.88	3.44	4.19	2.75	2.09	1.38	1.91	3.99	5.38	3.14	6.72	4.31	3.45	3.25
1.54	154Q140	143/145TC	4.88	3.44	4.19	2.75	2.09	1.38	1.91	3.99	5.38	3.14	6.72	4.31	3.45	3.25
1.75	175Q56	56C	5.06	3.56	4.19	2.75	2.09	1.38	2.06	4.09	5.75	3.24	6.78	4.31	3.81	3.25
1.75	175Q140	143/145TC	5.06	3.56	4.19	2.75	2.09	1.38	2.06	4.09	5.75	3.24	6.78	4.31	3.81	3.25
2.06	206Q56	56C	5.80	3.81	5.00	2.88	2.50	1.44	2.28	4.46	6.38	3.61	7.07	4.68	4.34	3.25
2.06	206Q140	143/145TC	5.80	3.81	5.00	2.88	2.50	1.44	2.28	4.46	6.38	3.61	7.07	4.68	4.34	3.25
2.37	237Q56	56C	6.12	4.06	5.00	2.88	2.50	1.44	2.50	4.63	6.94	3.77	7.84	5.14	4.88	3.25
2.37	237Q140	143/145TC	6.12	4.06	5.00	2.88	2.50	1.44	2.50	4.63	6.94	3.77	7.84	5.14	4.88	3.25
2.62	262Q56	56C	7.12	4.84	6.38	3.38	3.19	1.69	2.94	5.19	8.00	4.34	8.74	5.63	5.57	3.25
2.62	262Q140	143/145TC	7.12	4.84	6.38	3.38	3.19	1.69	2.94	5.19	8.00	4.34	8.74	5.63	5.57	3.25
2.62	262Q180	182/184TC	7.12	4.84	6.38	3.38	3.19	1.69	2.94	5.62	8.00	4.34	8.74	5.63	5.57	4.50
3.00	300Q56	56C	8.12	5.25	7.00	4.00	3.50	2.00	3.25	5.95	8.88	4.84	10.14	6.75	6.25	3.25
3.00	300Q140	143/145TC	8.12	5.25	7.00	4.00	3.50	2.00	3.25	5.95	8.88	4.84	10.14	6.75	6.25	3.25
3.00	300Q180	182/184TC	8.12	5.25	7.00	4.00	3.50	2.00	3.25	6.15	8.88	4.84	10.14	6.75	6.25	4.50
3.25	325Q56	56C	8.50	5.75	7.50	4.00	3.75	2.00	3.50	6.14	9.38	5.02	10.70	7.06	6.75	3.25
3.25	325Q140	143/145TC	8.50	5.75	7.50	4.00	3.75	2.00	3.50	6.14	9.38	5.02	10.70	7.06	6.75	3.25
3.25	325Q180	182/184TC	8.50	5.75	7.50	4.00	3.75	2.00	3.50	6.34	9.38	5.02	10.70	7.06	6.75	4.50
3.75	375Q56	56C	9.50	6.38	8.50	4.75	4.25	2.38	3.88	6.01	10.44	5.74	11.88	7.75	7.63	3.38
3.75	375Q140	143/145TC	9.50	6.38	8.50	4.75	4.25	2.38	3.88	6.01	10.44	5.74	11.88	7.75	7.63	3.38
3.75	375Q180	182/184TC	9.50	6.38	8.50	4.75	4.25	2.38	3.88	7.29	10.44	5.74	11.88	7.75	7.63	4.50
3.75	375Q210	213/215TC	9.50	6.38	8.50	4.75	4.25	2.38	3.88	7.29	10.44	5.74	11.88	7.75	7.63	4.50
4.50	450Q140	143/145TC	10.88	7.38	9.56	5.81	4.78	2.91	4.50	6.69	11.94	6.42	13.16	8.44	9.00	3.38
4.50	450Q180	182/184TC	10.88	7.38	9.56	5.81	4.78	2.91	4.50	7.97	11.94	6.42	13.16	8.44	9.00	4.50
4.50	450Q210	213/215TC	10.88	7.38	9.56	5.81	4.78	2.91	4.50	7.97	11.94	6.42	13.16	8.44	9.00	4.50
5.16	516Q180	182/184TC	12.50	7.38	11.00	5.81	5.50	2.91	5.31	8.78	13.75	7.42	13.91	9.06	10.47	4.50
5.16	516Q210	213/215TC	12.50	7.38	11.00	5.81	5.50	2.91	5.31	8.78	13.75	7.42	13.91	9.06	10.47	4.50
6.00	600Q180	182/184TC	14.50	8.13	12.75	6.38	6.38	3.19	6.50	9.68	16.50	8.25	15.31	10.00	12.50	4.50
6.00	600Q210	213/215TC	14.50	8.13	12.75	6.38	6.38	3.19	6.50	9.68	16.50	8.25	15.31	10.00	12.50	4.50

C.D.	N.E.M.A. Frame	T		INPUT		OUTPUT SHAFT				Stocked Ratios marked "x"								
						U	V	W Key										
		Size	Deep	Bore	Keyway			Sq.	Lgth.	5	10	15	20	25	30	40	50	60
1.33	56C	5/16-18	0.50	0.63	0.19	0.63	1.94	0.19	1.50	x	x	x	x	x	x	x	x	x
1.54	56C	5/16-18	0.63	0.63	0.19	0.75	1.90	0.19	1.50	x	x	x	x	x	x	x	x	x
1.54	143/145TC	5/16-18	0.63	0.88	0.19	0.75	1.90	0.19	1.50	x	x	x	x	-	-	-	-	-
1.75	56C	5/16-18	0.63	0.63	0.19	0.88	1.84	0.19	1.38	x	x	x	x	x	x	x	x	x
1.75	143/145TC	5/16-18	0.63	0.88	0.19	0.88	1.84	0.19	1.38	x	x	x	x	x	x	x	x	x
2.06	56C	5/16-18	0.63	0.63	0.19	1.00	2.08	0.25	1.44	x	x	x	x	x	x	x	x	x
2.06	143/145TC	5/16-18	0.63	0.88	0.19	1.00	2.08	0.25	1.44	x	x	x	x	x	x	x	x	x
2.37	56C	3/8-16	0.69	0.63	0.19	1.13	2.44	0.25	1.75	-	-	x	x	x	x	x	x	x
2.37	143/145TC	3/8-16	0.69	0.88	0.19	1.13	2.44	0.25	1.75	x	x	x	x	x	x	x	x	x
2.62	56C	3/8-16	0.69	0.63	0.19	1.13	2.52	0.25	1.75	-	-	-	x	x	x	x	x	x
2.62	143/145TC	3/8-16	0.69	0.88	0.19	1.13	2.52	0.25	1.75	x	x	x	x	x	x	x	x	x
2.62	182/184TC	3/8-16	0.69	1.13	0.25	1.13	2.52	0.25	1.75	x	x	x	x	-	-	-	-	-
3.00	56C	7/16-14	0.88	0.63	0.19	1.25	3.36	0.25	1.75	-	-	-	-	-	-	x	x	x
3.00	143/145TC	7/16-14	0.88	0.88	0.19	1.25	3.36	0.25	1.75	-	x	x	x	x	x	x	x	x
3.00	182/184TC	7/16-14	0.88	1.13	0.25	1.25	3.36	0.25	1.75	x	x	x	x	x	x	-	-	-
3.25	56C	7/16-14	0.88	0.63	0.19	1.38	3.42	0.31	2.63	-	-	-	-	-	-	x	x	x
3.25	143/145TC	7/16-14	0.88	0.88	0.19	1.38	3.42	0.31	2.63	-	x	x	x	x	x	x	x	x
3.25	182/184TC	7/16-14	0.88	1.13	0.25	1.38	3.42	0.31	2.63	x	x	x	x	x	x	-	-	-
3.75	56C	1/2-13	1.00	0.63	0.19	1.63	3.50	0.38	2.81	-	-	-	-	-	-	x	x	x
3.75	143/145TC	1/2-13	1.00	0.88	0.19	1.63	3.50	0.38	2.81	-	x	x	x	x	x	x	x	x
3.75	182/184TC	1/2-13	1.00	1.13	0.25	1.63	3.50	0.38	2.81	-	x	x	x	x	x	x	x	-
3.75	213/215TC	1/2-13	1.00	1.38	0.31	1.63	3.50	0.38	2.81	-	x	x	-	-	-	-	-	-
4.50	143/145TC	5/8-11	1.00	0.88	0.19	1.63	3.38	0.38	2.50	-	-	-	-	-	-	x	x	x
4.50	182/184TC	5/8-11	1.00	1.13	0.25	1.63	3.38	0.38	2.50	-	-	x	x	x	x	x	x	x
4.50	213/215TC	5/8-11	1.00	1.38	0.31	1.63	3.38	0.38	2.50	-	x	x	x	x	-	-	-	-
5.16	182/184TC	5/8-11	1.00	1.13	0.25	2.00	4.16	0.50	2.81	-	-	-	-	-	-	x	x	x
5.16	213/215TC	5/8-11	1.00	1.38	0.31	2.00	4.16	0.50	2.81	-	x	x	x	x	x	-	-	-
6.00	182/184TC	5/8-11	1.00	1.38	0.31	2.25	4.56	0.50	3.50	-	-	-	x	x	x	x	x	x
6.00	213/215TC	5/8-11	1.00	1.38	0.31	2.25	4.56	0.50	3.50	-	-	-	-	x	x	x	x	x

Dimensions (Inches) for Style "QT" - Worm Top

Components■		AB	BB	CB	DB	EB	FB	G	HB	KB	MB	PB	TB
Ref. No.	Standard Base Kit ▲												
133Q	133S-BK	5.37	5.38	4.37	3.31	2.19	1.66	0.53	2.25	5.19	6.69	3.58	0.34
154Q	154S-BK	6.50	5.56	5.25	4.31	2.63	2.16	0.59	2.50	5.97	7.09	4.04	0.41
175Q	175S-BK	6.99	5.75	5.75	4.50	2.88	2.25	0.69	2.75	6.44	7.19	4.50	0.41
206Q	206S-BK	7.69	6.00	6.38	4.69	3.19	2.34	0.72	3.00	7.09	7.68	5.06	0.47
237Q	237S-BK	8.37	6.19	7.06	4.88	3.53	2.44	0.75	3.25	7.69	8.24	5.63	0.49
262Q	262S-BK	9.25	6.50	8.00	5.25	4.00	2.63	0.75	3.69	8.75	8.88	6.32	0.53
300Q	300S-BK	10.00	7.50	8.44	5.88	4.22	2.94	0.75	4.00	9.63	10.50	7.00	0.53
325Q	325S-BK	11.12	7.75	9.50	6.13	4.75	3.06	0.81	4.38	10.25	10.94	7.63	0.53
375Q	375S-BK	12.00	8.63	10.38	7.00	5.19	3.50	0.94	4.81	11.38	12.06	8.56	0.59
450Q	450S-BK	13.88	9.31	12.13	7.63	6.06	3.81	1.13	5.63	13.06	13.13	10.19	0.66
516Q	516S-BK	16.38	10.38	14.13	8.38	7.06	4.19	1.13	6.44	14.88	14.25	11.60	0.78
600Q	600S-BK	19.00	12.00	16.50	9.50	8.25	4.75	1.25	7.75	17.75	16.00	13.75	0.91

Dimensions (Inches) for Style "QB"

Components		HC	PC
Ref. No.	Base Kits Standard		
133Q	133S-BK	2.14	3.47
154Q	154S-BK	2.52	4.06
175Q	175S-BK	2.63	4.38
206Q	206S-BK	2.75	4.81
237Q	237S-BK	2.81	5.19
262Q	262S-BK	3.19	5.82
300Q	300S-BK	3.38	6.38
325Q	325S-BK	3.50	6.75
375Q	375S-BK	3.75	7.50
450Q	450S-BK	4.06	8.63
516Q	516S-BK	4.40	9.56
600Q	600S-BK	5.25	11.25

Fan Kit

Basic Unit★	Fan Kit	AA		L	Wt. Lbs.
		Tap	Deep		
375Q	375 FAN	3/8 - 24	3/4	7.6	2.8
450Q	450 FAN	3/8 - 24	3/4	8.36	2.8
516Q	516 FAN	3/8 - 24	3/4	9.18	2.8
600Q	600 FAN	3/8 - 24	3/4	10.70	4.2

★ To complete Part No. add shaft assembly (L, R, LR) and ratio symbol to size - for example 133Q56LR10.
◆ Components needed to make assembled reducer must be ordered separately. If Fan Kit is required, see the table to left.
▲ Standard Base Kit (S-BK) base kits are shown on page C-65. Consult factory for ratios not shown as standard.

Style C

C-Face Coupled

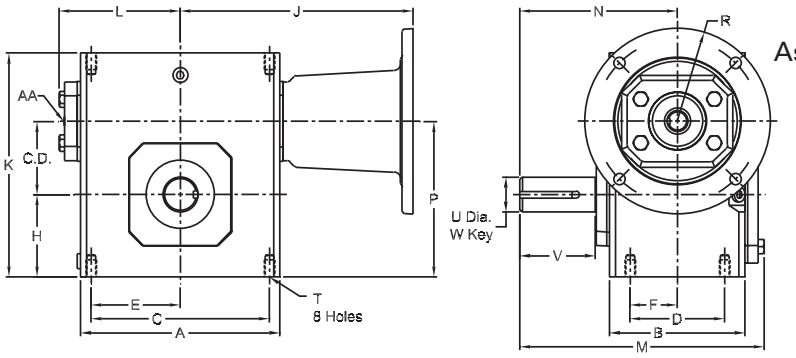

Assembly Drawing and Sample of Components

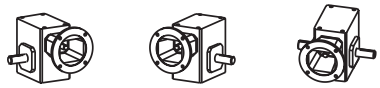

133UL10	133UR10	133ULR10
133MAK56	133MAK56	133MAK56

Style CT

C Face Coupled Worm Top

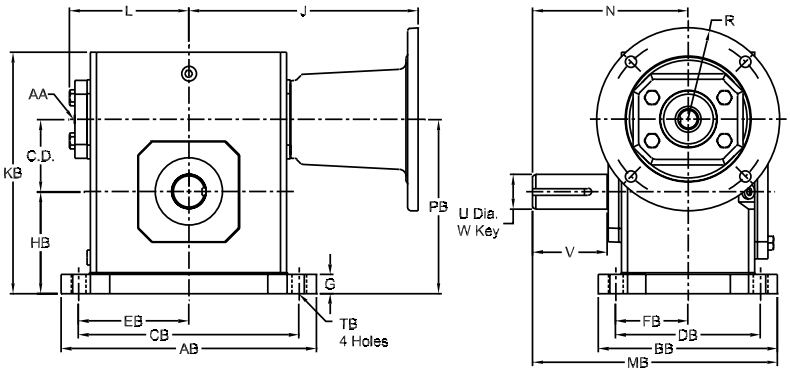

Assembly Drawing and Sample of Components

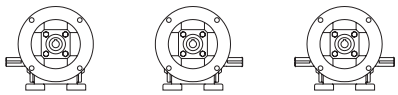

133UL10	133UR10	133ULR10
133MAK56	133MAK56	133MAK56
133S-BK	133S-BK	133S-BK

Style CB

C Face Coupled Worm Bottom

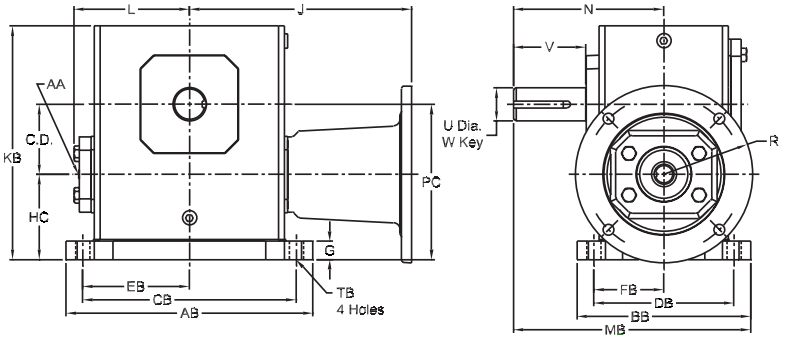

Assembly Drawing and Sample of Components

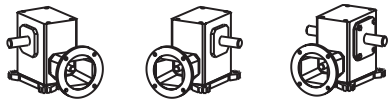

133UR10	133UL10	133ULR10
133MAK56	133MAK56	133MAK56
133S-BK	133S-BK	133S-BK

Note: When mounting Style "CB", interference may occur; use a Riser Block or consult Application Engineering (1 800 626 2093).

Dimensions (Inches) for Style "C"

CD	Component ◆		A	B	C	D	E	F	H	K	L	M	N	P	T	
	Basic Unit ★	Adapter Kit													Size	Deep
1.33	133U	See Adapter Kit Table Below	3.80	2.82	3.25	2.00	1.63	1.00	1.72	4.66	2.61	6.06	4.00	3.05	5/16 - 18	0.50
1.54	154U		4.88	3.44	4.19	2.75	2.09	1.38	1.91	5.38	3.14	6.72	4.31	3.45	5/16 - 18	0.63
1.75	175U		5.06	3.56	4.19	2.75	2.09	1.38	2.06	5.75	3.24	6.78	4.31	3.81	5/16 - 18	0.63
2.06	206U		5.80	3.81	5.00	2.88	2.50	1.44	2.28	6.38	3.61	7.28	4.68	4.34	5/16 - 18	0.63
2.37	237U		6.12	4.06	5.00	2.88	2.50	1.44	2.50	6.94	3.77	7.84	5.14	4.87	3/8 - 16	0.69
2.62	262U		7.12	4.84	6.38	3.38	3.19	1.69	2.94	8.00	4.34	8.74	5.63	5.56	3/8 - 16	0.69
3.00	300U		8.12	5.25	7.00	4.00	3.50	2.00	3.25	8.88	4.84	10.14	6.75	6.25	7/16 - 14	0.88
3.25	325U		8.50	5.75	7.50	4.00	3.75	2.00	3.50	9.38	5.02	10.70	7.06	6.75	7/16 - 14	0.88
3.75	375U		9.50	6.38	8.50	4.75	4.25	2.38	3.88	10.44	5.74	11.88	7.75	7.63	1/2 - 13	1.00
4.50	450U		10.88	7.38	9.56	5.81	4.78	2.91	4.50	11.94	6.42	13.16	8.44	9.00	5/8 - 11	1.00
5.16	516U		12.50	7.38	11.00	5.81	5.50	2.91	5.31	13.75	7.42	13.91	9.06	10.47	5/8 - 11	1.00
6.00	600U		14.50	8.13	12.75	6.38	6.38	3.19	6.50	16.50	8.25	15.31	10.00	12.50	5/8 - 11	1.00

CD	OUTPUT SHAFT				Stocked Ratios marked "x"											
	U	V	W Key													
			Sq.	Lgth.	5	7.5	10	15	20	25	30	40	50	60	60	60
1.33	0.63	1.94	0.19	1.50	x	x	x	x	x	x	x	x	x	x	x	x
1.54	0.75	1.90	0.19	1.50	x	x	x	x	x	x	x	x	x	x	x	x
1.75	0.88	1.84	0.19	1.38	x	x	x	x	x	x	x	x	x	x	x	x
2.06	1.00	2.08	0.25	1.44	x	x	x	x	x	x	x	x	x	x	x	x
2.37	1.13	2.44	0.25	1.75	x	x	x	x	x	x	x	x	x	x	x	x
2.62	1.13	2.52	0.25	1.75	x	x	x	x	x	x	x	x	x	x	x	x
3.00	1.25	3.36	0.25	1.75	x	x	x	x	x	x	x	x	x	x	x	x
3.25	1.38	3.42	0.31	2.63	x	x	x	x	x	x	x	x	x	x	x	x
3.75	1.63	3.50	0.38	2.81	-	-	x	x	x	x	x	x	x	x	-	-
4.50	1.63	3.38	0.38	2.50	-	-	x	x	x	x	x	x	x	x	-	-
5.16	2.00	4.16	0.50	2.81	-	-	x	x	x	x	x	x	x	x	-	-
6.00	2.25	4.56	0.50	3.50	x	-	x	x	x	x	x	x	x	x	-	-

Dimensions (Inches) for Style "CT" - With Base - Worm Top

Components ◆			AB	BB	CB	DB	EB	FB	G	HB	KB	MB	PB	TB
Base Unit ★	Adapter Kit.	Standard Base Kit ▲												
133U	See Adapter Kit Table Below	133S-BK	5.37	5.38	4.37	3.31	2.19	1.66	0.53	2.25	5.19	6.69	3.58	0.34
154U		154S-BK	6.50	5.56	5.25	4.31	2.63	2.16	0.59	2.50	5.97	7.09	4.04	0.41
175U		175S-BK	6.99	5.75	5.75	4.50	2.88	2.25	0.69	2.75	6.44	7.19	4.50	0.41
206U		206S-BK	7.69	6.00	6.38	4.69	3.19	2.34	0.72	3.00	7.09	7.68	5.06	0.47
237U		237S-BK	8.37	6.19	7.06	4.88	3.53	2.44	0.75	3.25	7.69	8.24	5.63	0.49
262U		262S-BK	9.25	6.50	8.00	5.25	4.00	2.63	0.75	3.69	8.75	8.88	6.32	0.53
300U		300S-BK	10.00	7.50	8.44	5.88	4.22	2.94	0.75	4.00	9.63	10.50	7.00	0.53
325U		325S-BK	11.12	7.75	9.50	6.13	4.75	3.06	0.81	4.38	10.25	10.94	7.63	0.53
375U		375S-BK	12.00	8.63	10.38	7.00	5.19	3.50	0.94	4.81	11.38	12.06	8.56	0.59
450U		450S-BK	13.88	9.31	12.13	7.63	6.06	3.81	1.13	5.63	13.06	13.13	10.19	0.66
516U		516S-BK	16.38	10.38	14.13	8.38	7.06	4.19	1.13	6.44	14.88	14.25	11.60	0.78
600U		600S-BK	19.00	12.00	16.50	9.50	8.52	4.75	1.25	7.75	17.75	16.00	13.75	0.91

Dimensions (Inches) for Style "CB"

Components ◆			HC	PC
Ref. No.	Adapter Kit	Standard Base Kit ▲		
133Q	See Adapter Kit Table Below	133S-BK	2.14	3.47
154Q		154S-BK	2.52	4.06
175Q		175S-BK	2.63	4.38
206Q		206S-BK	2.75	4.81
237Q		237S-BK	2.81	5.19
262Q		262S-BK	3.19	5.82
300Q		300S-BK	3.38	6.38
325Q		325S-BK	3.50	6.75
375Q		375S-BK	3.75	7.50
450Q		450S-BK	4.06	8.63
516Q		516S-BK	4.40	9.56
600Q		600S-BK	5.25	11.25

Fan Kit

Basic Unit ★	Fan Kit	AA		L	Wt. Lbs.
		Tap	Deep		
375U	375 FAN	3/8-24	3/4	7.66	2.8
450U	450 FAN	3/8-24	3/4	8.36	2.8
516U	516 FAN	3/8-24	3/4	9.18	2.8
600U	600 FAN	3/8-24	3/4	10.70	4.2

N.E.M.A. Frame Adapter Kits and Dimensions

C.D.	56C Input: .625 Kw.: 3/16 x 3/32			143/145TC Input: .875 Kw.: 3/16 x 3/32			182/184TC Input: 1.125 KW.: 1/4 x 1/8			213/215TC Input: 1.375 Kw.: 5/16 x 5/32			254/256TC Input: 1.625 Kw.: 3/8 x 3/16		
	Adapter Kit No .	J	R	Adapter Kit No.	J	R	Adapter Kit No.	J	R	Adapter Kit No.	J	R	Adapter Kit No.	J	R
1.33	133MAK56	6.07	3.25	133MAK140	6.07	3.25									
1.54	154MAK56	6.6	3.25	154MAK140	6.6	3.25									
1.75	175MAK56	6.7	3.25	175MAK140	6.7	3.25									
2.06	206MAK56	7.07	3.25	206MAK140	7.07	3.25									
2.37	237MAK56	7.76	3.25	237MAK140	7.76	3.25	237MAK180	8.76	4.5						
2.62	262MAK56	8.32	3.25	262MAK140	8.32	3.25	262MAK180	9.32	4.5						
3.00	300MAK56	8.82	3.25	300MAK140	8.82	3.25	300MAK180	9.82	4.5						
3.25	325MAK56	9.01	3.25	325MAK140	9.01	3.25	325MAK180	10.01	4.5	325MAK210	10.01	4.5			
3.75	375MAK56	11.47	3.38	375MAK140	11.47	3.38	375MAK180	12.92	4.5	375MAK210	12.92	4.5			
4.50				450MAK140	12.15	3.38	450MAK180	13.6	4.5	450MAK210	13.6	4.5			
5.16							516MAK180	14.4	4.5	516MAK210	14.4	4.5			
6.00							600MAK180	16.97	4.5	600MAK210	16.97	4.5	600MAK250	16.97	4.5

★ To complete Part No. add shaft assembly (L, R, LR) and ratio symbol to size - for example 133ULR10.
♦ Components needed to make assembled reducer must be ordered separately. If Fan Kit is required, see the table above.
▲ Standard Base Kit (S-BK) base kits are shown on page C-65.
Consult factory for ratios not shown as standard.

Style CRT

C-Face Coupled - Riser Block
Worm Top

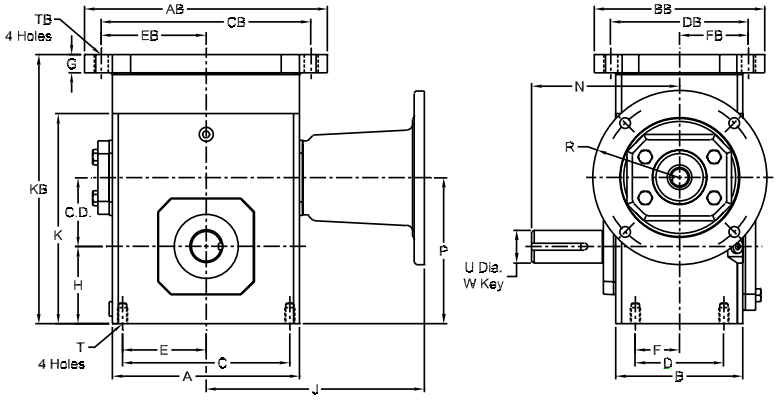

Assembly Drawing and Sample of Components

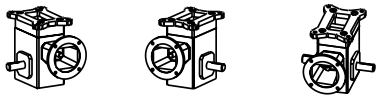

133UL10	133UR10	133ULR10
133R-BK	133R-BK	133R-BK
133MAK56	133MAK56	133MAK56
133S-BK	133S-BK	133S-BK



DIMENSIONS (INCHES) FOR STYLE "CRT" - C-FACE QUILLED- RISER BLOCK WORM TOP

C.D.	BASIC UNIT ★	Adapter Kit	N.E.M.A. FRAME	A	B	C	D	E	F	H	J	N	P	R
1.33	133U	133MAK56	56C	4.00	2.88	3.25	2.00	1.63	1.00	1.82	6.38	4.00	3.05	3.25
1.54	154U	154MAK56	56C	4.88	3.44	4.19	2.75	2.09	1.38	1.91	6.60	4.31	3.45	3.25
1.54	154U	154MAK140	143/145TC	4.88	3.44	4.19	2.75	2.09	1.38	1.91	6.60	4.31	3.45	3.25
1.75	175U	175MAK56	56C	5.06	3.56	4.19	2.75	2.09	1.38	2.06	6.70	4.31	3.81	3.25
1.75	175U	175MAK140	143/145TC	5.06	3.56	4.19	2.75	2.09	1.38	2.06	6.70	4.31	3.81	3.25
2.06	206U	206MAK56	56C	5.80	3.81	5.00	2.88	2.50	1.44	2.29	7.07	4.68	4.35	3.25
2.06	206U	206MAK140	143/145TC	5.80	3.81	5.00	2.88	2.50	1.44	2.29	7.07	4.68	4.35	3.25
2.37	237U	237MAK56	56C	6.12	4.06	5.00	2.88	2.50	1.44	2.50	7.76	5.14	4.88	3.25
2.37	237U	237MAK140	143/145TC	6.12	4.06	5.00	2.88	2.50	1.44	2.50	7.76	5.14	4.88	3.25
2.37	237U	237MAK180	182/184TC	6.12	4.06	5.00	2.88	2.50	1.44	2.50	8.76	5.14	4.88	4.50
2.62	262U	262MAK56	56C	7.12	4.84	6.38	3.38	3.19	1.69	2.93	8.32	5.63	5.56	3.25
2.62	262U	262MAK140	143/145TC	7.12	4.84	6.38	3.38	3.19	1.69	2.93	8.32	5.63	5.56	3.25
2.62	262U	262MAK180	182/184TC	7.12	4.84	6.38	3.38	3.19	1.69	2.93	9.32	5.63	5.56	4.50
3.00	300U	300MAK56	56C	8.12	5.25	7.00	4.00	3.50	2.00	3.25	8.82	6.75	6.25	3.25
3.00	300U	300MAK140	143/145TC	8.12	5.25	7.00	4.00	3.50	2.00	3.25	8.82	6.75	6.25	3.25
3.00	300U	300MAK180	182/184TC	8.12	5.25	7.00	4.00	3.50	2.00	3.25	9.82	6.75	6.25	4.50
3.25	325U	325MAK56	56C	8.50	5.75	7.50	4.00	3.75	2.00	3.50	9.01	7.06	6.75	3.25
3.25	325U	325MAK140	143/145TC	8.50	5.75	7.50	4.00	3.75	2.00	3.50	9.01	7.06	6.75	3.25
3.25	325U	325MAK180	182/184TC	8.50	5.75	7.50	4.00	3.75	2.00	3.50	10.01	7.06	6.75	4.50
3.75	375U	375MAK56	56C	9.50	6.38	8.50	4.75	4.25	2.38	3.88	11.47	7.75	7.63	3.38
3.75	375U	375MAK140	143/145TC	9.50	6.38	8.50	4.75	4.25	2.38	3.88	11.47	7.75	7.63	3.38
3.75	375U	375MAK180	182/184TC	9.50	6.38	8.50	4.75	4.25	2.38	3.88	12.92	7.75	7.63	4.50
3.75	375U	375MAK210	213/215TC	9.50	6.38	8.50	4.75	4.25	2.38	3.88	12.92	7.75	7.63	4.50
4.50	450U	450MAK140	143/145TC	10.88	7.38	9.56	5.81	4.78	2.91	4.50	12.15	8.44	9.00	3.38
4.50	450U	450MAK180	182/184TC	10.88	7.38	9.56	5.81	4.78	2.91	4.50	13.60	8.44	9.00	4.50
4.50	450U	450MAK210	213/215TC	10.88	7.38	9.56	5.81	4.78	2.91	4.50	13.60	8.44	9.00	4.50
5.16	516U	516MAK180	182/184TC	12.50	7.38	11.00	5.81	5.50	2.91	5.31	14.40	9.06	10.47	4.50
5.16	516U	516MAK210	213/215TC	12.50	7.38	11.00	5.81	5.50	2.91	5.31	14.40	9.06	10.47	4.50

C.D.	N.E.M.A. FRAME	T		OUTPUT SHAFT			STOCK RATIOS MARKED "X"								
				U	W KEY										
		SIZE	DEEP		SQ.	LGTH.	5	10	15	20	25	30	40	50	60
1.33	56C	5/16-18	0.50	0.63	0.19	1.31	x	x	x	x	x	x	x	x	x
1.54	56C	5/16-18	0.63	0.75	0.19	1.50	x	x	x	x	x	x	x	x	x
1.54	143/145TC	5/16-18	0.63	0.75	0.19	1.50	x	x	x	-	-	-	-	-	-
1.75	56C	5/16-18	0.63	0.88	0.19	1.38	x	x	x	x	x	x	x	x	x
1.75	143/145TC	5/16-18	0.63	0.88	0.19	1.38	x	x	x	-	-	-	-	-	-
2.06	56C	3/8-16	0.63	1.00	0.25	1.44	x	x	x	x	x	x	x	x	x
2.06	143/145TC	3/8-16	0.63	1.00	0.25	1.44	x	x	x	x	x	x	x	x	x
2.37	56C	3/8-16	0.69	1.13	0.25	1.75	x	x	x	x	x	x	x	x	x
2.37	143/145TC	3/8-16	0.69	1.13	0.25	1.75	x	x	x	x	x	x	x	x	x
2.37	182/184TC	3/8-16	0.69	1.13	0.25	1.75	x	x	-	-	-	-	-	-	-
2.62	56C	3/8-16	0.69	1.13	0.25	1.75	-	x	x	x	x	x	x	x	x
2.62	143/145TC	3/8-16	0.69	1.13	0.25	1.75	-	x	x	x	x	x	x	x	x
2.62	182/184TC	3/8-16	0.69	1.13	0.25	1.75	x	x	-	-	-	-	-	-	-
3.00	56C	7/16-14	0.88	1.25	0.25	1.75	-	-	x	x	x	x	x	x	x
3.00	143/145TC	7/16-14	0.88	1.25	0.25	1.75	-	x	x	x	x	x	x	x	x
3.00	182/184TC	7/16-14	0.88	1.25	0.25	1.75	-	x	x	x	x	x	x	x	x
3.25	56C	7/16-14	0.88	1.38	0.38	2.25	-	x	x	x	x	x	x	x	x
3.25	143/145TC	7/16-14	0.88	1.38	0.38	2.25	-	x	x	x	x	x	x	x	x
3.25	182/184TC	7/16-14	0.88	1.38	0.38	2.25	-	x	x	x	x	x	x	x	x
3.75	56C	1/2-13	1.00	0.63	0.38	2.81	-	-	-	-	-	-	x	x	x
3.75	143/145TC	1/2-13	1.00	0.88	0.38	2.81	-	x	x	x	x	x	x	x	x
3.75	182/184TC	1/2-13	1.00	1.13	0.38	2.81	-	x	x	x	x	x	x	x	-
3.75	213/215TC	1/2-13	1.00	1.38	0.38	2.81	-	x	x	-	-	-	-	-	-
4.50	143/145TC	5/8-11	1.00	0.88	0.38	2.50	-	-	-	-	-	-	x	x	x
4.50	182/184TC	5/8-11	1.00	1.13	0.38	2.50	-	-	x	x	x	x	x	x	x
4.50	213/215TC	5/8-11	1.00	1.38	0.38	2.50	-	x	x	x	x	-	-	-	-
5.16	182/184TC	5/8-11	1.00	1.13	0.50	2.81	-	-	-	-	-	-	x	x	x
5.16	213/215TC	5/8-11	1.00	1.38	0.50	2.81	-	x	x	x	x	x	-	-	-

DIMENSIONS (INCHES) FOR STYLE "CRT" - C-FACE COUPLED- RISER BLOCK WORM TOP

COMPONENTS ♦			AB	BB	CB	DB	EB	FB	G	KB	TB
REF. NO.	RISER BLOCK KIT	STANDARD BASE KIT									
133U	133R-BK	133S-BK	5.38	4.19	4.38	3.31	2.19	1.66	0.47	7.02	0.38
154U	154R-BK	154S-BK	6.50	5.56	5.25	4.31	2.63	2.16	0.59	7.97	0.41
175U	175R-BK	175S-BK	6.99	5.75	5.75	4.50	2.88	2.25	0.69	8.44	0.41
206U	206R-BK	206S-BK	7.69	6.00	6.38	4.69	3.19	2.34	0.72	9.10	0.47
237U	237R-BK	237S-BK	8.37	6.19	7.06	4.88	3.53	2.44	0.75	9.69	0.49
262U	262R-BK	262S-BK	9.25	6.50	8.00	5.25	4.00	2.63	0.75	10.25	0.53
300U	300R-BK	300S-BK	10.00	7.50	8.44	5.88	4.22	2.94	0.75	11.76	0.53
325U	325R-BK	325S-BK	11.12	7.75	9.50	6.13	4.75	3.06	0.81	12.39	0.53
375U	375R-BK	375S-BK	12.00	8.63	10.38	7.00	5.19	3.50	0.94	13.15	0.59
450U	450R-BK	450S-BK	13.88	9.31	12.13	7.63	6.06	3.81	1.13	15.33	0.66
516U	516R-BK	516S-BK	16.38	10.38	14.13	8.38	7.06	4.19	1.13	16.88	0.78

★ To complete Part No. add shaft assembly (L, R, LR) and ratio symbol to size - for example 133Q56H10.
♦ Components needed to make assembled reducer must be ordered separately. If Fan Kit is required, see the table above. Consult factory for ratios not shown as standard.
Standard Base Kits shown on page C-65. Riser Block Kit shown on page C-67.

Style UVL

Vertical Low Base

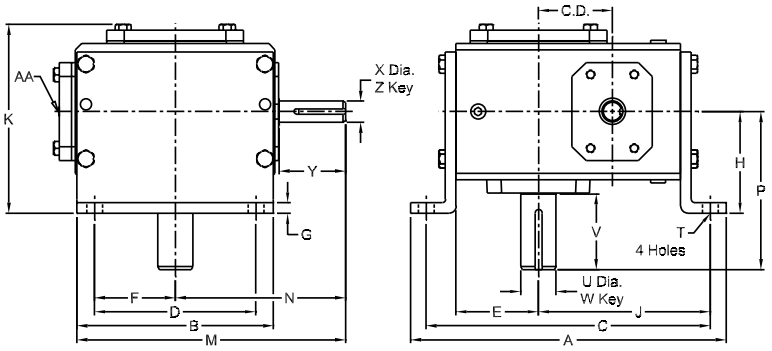

Assembly Drawing and Sample of Components

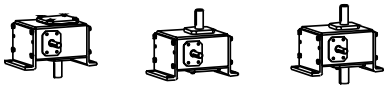

133UL10 133VL-BK | 133UR10 133VL-BK | 133ULR10 133VL-BK



133UL10 133VL-BK | 133UR10 133VL-BK | 133ULR10 133VL-BK

Style UVH

Vertical High Base

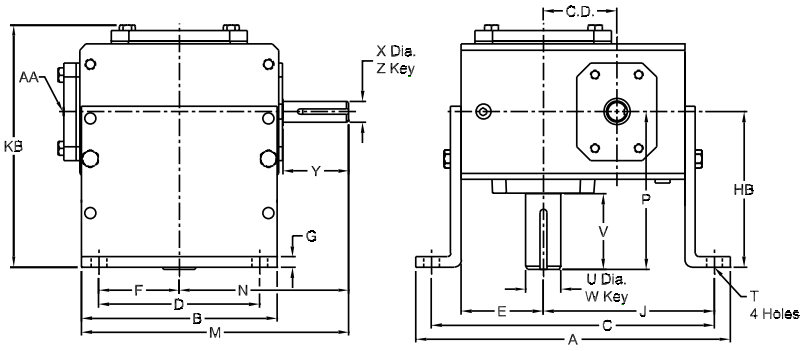

Assembly Drawing and Sample of Components

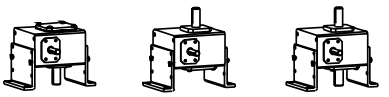

133UL10 133VH-BK | 133UR10 133VH-BK | 133ULR10 133VH-BK

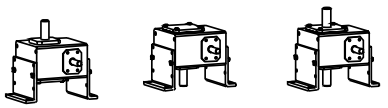

133UL10 133VH-BK | 133UR10 133VH-BK | 133ULR10 133VH-BK

Style UVJ

Vertical "J" Base

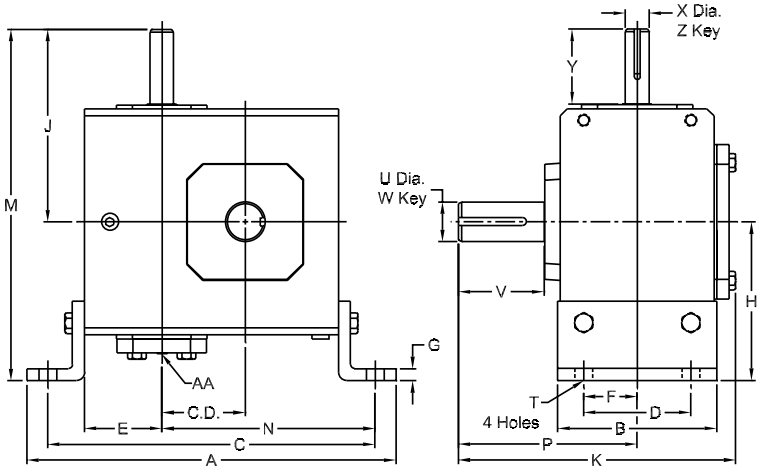

Assembly Drawing and Sample of Components

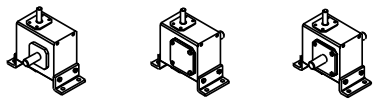

133UL10 133VJ-BK | 133UR10 133VJ-BK | 133ULR10 133VJ-BK

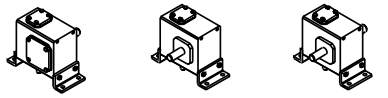

133UL10 133VJ-BK | 133UR10 133VJ-BK | 133ULR10 133VJ-BK

Note: If mounting a fan unit with input up, fan extends beyond "H" dimension.

Dimensions (Inches) for Style "UVL" - With Vertical Low Base

CD	Component ◆		A	B	C	D	E	F	G	H	J	K	M	N	P	T
	Basic Unit ★	Base Kit														
1.33	133U	133VL-BK	7.26	4.00	6.50	3.00	1.72	1.50	0.25	2.63	3.86	4.69	5.76	3.82	4.00	0.38
1.54	154U	154VL-BK	7.88	5.00	7.00	4.00	1.91	2.00	0.25	3.00	4.28	5.41	6.76	4.35	4.31	0.44
1.75	175U	175VL-BK	8.25	5.00	7.37	4.00	2.06	2.00	0.25	3.00	4.50	5.47	6.76	4.45	4.31	0.44
2.06	206U	206VL-BK	9.38	6.00	8.38	4.88	2.28	2.44	0.38	3.13	5.09	5.73	7.76	4.82	4.68	0.50
2.37	237U	237VL-BK	9.94	6.00	8.81	4.88	2.50	2.44	0.38	3.38	5.44	6.08	8.38	5.51	5.14	0.50
2.63	263U	263VL-BK	11.24	7.00	10.12	5.75	2.94	2.88	0.38	3.63	6.12	6.74	9.38	6.07	5.63	0.56
3.00	300U	300VL-BK	12.50	8.00	11.13	6.00	3.25	3.00	0.38	3.94	6.75	7.33	10.38	6.57	6.75	0.56
3.25	325U	325VL-BK	13.00	8.50	11.88	6.13	3.50	3.06	0.38	4.69	7.13	8.33	10.88	6.76	7.06	0.56
3.75	375U	375VL-BK	15.69	9.50	13.94	8.00	3.44	4.00	0.88	5.25	8.31	9.58	13.13	8.38	7.75	0.59
4.50	450U	450VL-BK	16.94	10.88	14.94	9.56	4.63	4.78	0.88	5.06	8.94	9.78	15.09	9.59	8.44	0.69
5.16	516U	516VL-BK	20.57	12.50	18.00	10.00	5.44	5.00	1.00	6.38	10.56	11.25	16.93	10.69	9.06	0.78
6.00	600U	600VL-BK	23.25	14.75	20.88	11.75	6.63	5.88	1.13	7.31	12.19	12.63	19.13	11.75	10.00	0.91

CD	OUTPUT SHAFT				INPUT SHAFT				Stocked Ratios												
	U	V	W Key		X	Y	Z Key		5	7.5	10	15	20	25	30	40	50	60	80	100	
			SQ.	LGTH			SQ.	LGTH													
1.33	0.63	1.94	0.19	1.50	0.50	1.76	0.13	1.00	x	x		x	x	x	x	x	x	x	x	x	x
1.54	0.75	1.90	0.19	1.50	0.63	1.76	0.19	1.38	x	x	x	x	x	x	x	x	x	x	x	x	x
1.75	0.88	1.84	0.19	1.38	0.63	1.76	0.19	1.38	x	x	x	x	x	x	x	x	x	x	x	x	x
2.06	1.00	2.08	0.25	1.44	0.63	1.76	0.19	1.38	x	x	x	x	x	x	x	x	x	x	x	x	x
2.37	1.13	2.44	0.25	1.75	0.75	2.38	0.19	1.63	x	x	x	x	x	x	x	x	x	x	x	x	x
2.63	1.13	2.52	0.25	1.75	0.75	2.38	0.19	1.63	x	x	x	x	x	x	x	x	x	x	x	x	x
3.00	1.25	3.36	0.25	1.75	0.88	2.38	0.19	1.63	x	x	x	x	x	x	x	x	x	x	x	x	x
3.25	1.38	3.42	0.31	2.63	0.88	2.38	0.19	1.63	x	x	x	x	x	x	x	x	x	x	x	x	x
3.75	1.63	3.50	0.38	2.81	1.00	2.91	0.25	1.75	-	-	x	x	x	x	x	x	x	x	-	-	
4.50	1.63	3.38	0.38	2.50	1.13	3.48	0.25	2.50	-	-	x	x	x	x	x	x	x	x	-	-	
5.16	2.00	4.16	0.50	2.81	1.25	3.75	0.25	2.56	-	-	x	x	x	x	x	x	x	x	-	-	
6.00	2.25	4.56	0.50	3.50	1.50	3.75	0.38	2.94	x	-	x	x	x	x	x	x	x	x	-	-	

Dimensions (Inches) for Style "UVH"

Component ◆		HB	KB
Basic Unit ★	Base Kit		
133U	133VH-BK	3.56	5.62
154U	154VH-BK	4.38	6.79
175U	175VH-BK	4.38	6.85
206U	206VH-BK	4.88	7.48
237U	237VH-BK	5.25	7.95
263U	263VH-BK	5.56	8.67
300U	300VH-BK	5.88	9.27
325U	325VH-BK	6.25	9.89
375U	375VH-BK	7.00	11.33
450U	450VH-BK	8.56	13.28
516U	516VH-BK	8.63	13.50
600U	600VH-BK	9.63	14.94

Fan Kit

Basic Unit ★	Fan Kit	AA		Wt. Lbs.
		Tap	Deep	
375U	375 FAN	3/8-24	3/4	2.8
450U	450 FAN	3/8-24	3/4	2.8
516U	516 FAN	3/8-24	3/4	2.8
600U	600 FAN	3/8-24	3/4	4.2

Dimensions (Inches) for Style "UVJ" - With Vertical "J" Base

Components ◆		A	B	C	D	E	F	G	H	J	K	M	N	P	T
Base Unit ★	Base Kit														
133U	133VJ-BK	7.42	2.75	6.42	2.00	1.61	1.00	0.25	2.94	3.82	6.06	6.76	3.93	4.00	0.38
154U	154VJ-BK	8.14	3.50	7.08	2.75	1.93	1.38	0.25	3.50	4.35	6.72	7.85	4.75	4.31	0.44
175U	175VJ-BK	8.51	3.50	7.63	2.50	1.94	1.25	0.25	3.50	4.45	6.78	7.95	4.75	4.31	0.44
206U	206VJ-BK	9.76	4.00	8.63	2.63	2.04	1.31	0.38	4.01	4.82	7.28	8.83	5.46	4.68	0.56
237U	237VJ-BK	10.31	4.00	9.19	2.88	2.06	1.44	0.38	4.06	5.51	7.84	9.57	6.01	5.14	0.69
262U	262VJ-BK	11.62	5.00	10.38	3.38	2.43	1.69	0.38	5.00	6.07	8.74	11.07	6.76	5.63	0.56
300U	300VJ-BK	12.64	6.00	11.38	3.88	2.63	1.94	0.38	5.62	6.57	10.14	12.19	7.50	6.75	0.56
325U	325VJ-BK	13.14	6.00	11.88	3.88	2.63	1.94	0.38	5.63	6.76	10.70	12.39	8.00	7.06	0.56
375U	375VJ-BK	15.06	6.25	13.31	4.75	2.94	2.38	0.88	6.00	8.38	9.63	14.38	9.06	7.75	0.59
450U	450VJ-BK	16.94	7.38	14.94	5.81	3.06	2.91	0.88	7.38	9.59	11.13	16.96	8.94	8.44	0.69
516U	516VJ-BK	19.38	7.38	17.50	5.81	3.40	2.91	1.00	7.75	10.69	11.31	18.44	12.35	9.06	0.78

★ To complete Part No. add shaft assembly (L, R, LR) and ratio symbol to size - for example 133ULR10.
♦ Components needed to make assembled reducer must be ordered separately. If Fan Kit is required, see the table above.
Consult factory for ratios not shown as standard.
133-325 Vertical High and Low Base Kits shown on page C-65.
133-325 Vertical J Base Kits shown on page C-66.
375-600 Vertical High and Low Base Kits shown on page C-66.
375-516 Vertical J Base Kits shown on page C-66.

Style QVL

Vertical Low Base

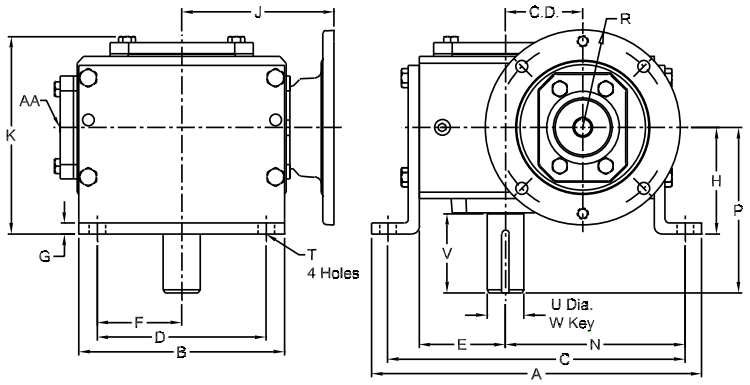

Assembly Drawing and Sample of Components



133Q56L10 133VL-BK | 133Q56R10 133VL-BK | 133Q56LR10 133VL-BK

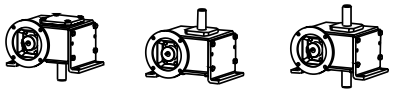

133Q56L10 133VL-BK | 133Q56R10 133VL-BK | 133Q56LR10 133VL-BK

Style QVH

Vertical High Base

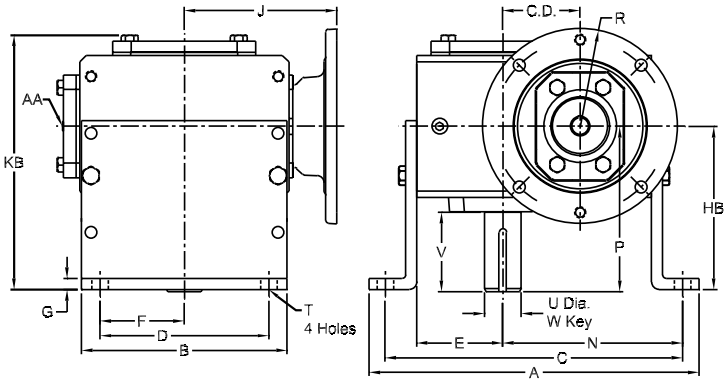

Assembly Drawing and Sample of Components



133Q56L10 133VH-BK | 133Q56R10 133VH-BK | 133Q56LR10 133VH-BK

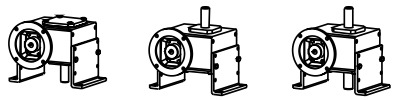

133Q56L10 133VH-BK | 133Q56R10 133VH-BK | 133Q56LR10 133VH-BK



Dimensions (Inches) for Style "QVL" - With Vertical Low Base

CD	Component ◆		N.E.M.A. Frame	A	B	C	D	E	F	G	H	J	K	N	P
	Basic Unit ★	Base Kit													
1.33	133Q56	133VL-BK	56C	7.26	4.00	6.50	3.00	1.72	1.50	0.25	2.63	3.46	4.69	3.86	4.00
1.54	154Q56	154VL-BK	56C	7.88	5.00	7.00	4.00	1.91	2.00	0.25	3.00	3.99	5.41	4.28	4.31
1.54	154Q140	154VL-BK	143/145TC	7.88	5.00	7.00	4.00	1.91	2.00	0.25	3.00	3.99	5.41	4.28	4.31
1.75	175Q56	175VL-BK	56C	8.25	5.00	7.37	4.00	2.06	2.00	0.25	3.00	4.09	5.47	4.50	4.31
1.75	175Q140	175VL-BK	143/145TC	8.25	5.00	7.37	4.00	2.06	2.00	0.25	3.00	4.09	5.47	4.50	4.31
2.06	206Q56	206VL-BK	56C	9.38	6.00	8.38	4.88	2.28	2.44	0.38	3.13	4.46	5.73	5.09	4.68
2.06	206Q140	206VL-BK	143/145TC	9.38	6.00	8.38	4.88	2.28	2.44	0.38	3.13	4.46	5.73	5.09	4.68
2.37	237Q56	237VL-BK	56C	9.94	6.00	8.81	4.88	2.50	2.44	0.38	3.38	4.63	6.08	5.44	5.14
2.37	237Q140	237VL-BK	143/145TC	9.94	6.00	8.81	4.88	2.50	2.44	0.38	3.38	4.63	6.08	5.44	5.14
2.62	262Q56	262VL-BK	56C	11.24	7.00	10.12	5.75	2.94	2.88	0.38	3.63	5.19	6.74	6.12	5.63
2.62	262Q140	262VL-BK	143/145TC	11.24	7.00	10.12	5.75	2.94	2.88	0.38	3.63	5.19	6.74	6.12	5.63
2.62	262Q180	262VL-BK	182/184TC	11.24	7.00	10.12	5.75	2.94	2.88	0.38	3.63	5.62	6.74	6.12	5.63
3.00	300Q56	300VL-BK	56C	12.50	8.00	11.13	6.00	3.25	3.00	0.38	3.94	5.95	7.33	6.75	6.75
3.00	300Q140	300VL-BK	143/145TC	12.50	8.00	11.13	6.00	3.25	3.00	0.38	3.94	5.95	7.33	6.75	6.75
3.00	300Q180	300VL-BK	182/184TC	12.50	8.00	11.13	6.00	3.25	3.00	0.38	3.94	6.15	7.33	6.75	6.75
3.25	325Q56	325VL-BK	56C	13.00	8.50	11.88	6.13	3.50	3.06	0.38	4.69	6.14	8.33	7.13	7.06
3.25	325Q140	325VL-BK	143/145TC	13.00	8.50	11.88	6.13	3.50	3.06	0.38	4.69	6.14	8.33	7.13	7.06
3.25	325Q180	325VL-BK	182/184TC	13.00	8.50	11.88	6.13	3.50	3.06	0.38	4.69	6.34	8.33	7.13	7.06
3.75	375Q56	375VL-BK	56C	15.69	9.50	13.94	8.00	3.44	4.00	0.88	5.25	6.01	9.58	8.31	7.75
3.75	375Q140	375VL-BK	143/145TC	15.69	9.50	13.94	8.00	3.44	4.00	0.88	5.25	6.01	9.58	8.31	7.75
3.75	375Q180	375VL-BK	182/184TC	15.69	9.50	13.94	8.00	3.44	4.00	0.88	5.25	7.29	9.58	8.31	7.75
3.75	375Q210	375VL-BK	213/215TC	15.69	9.50	13.94	8.00	3.44	4.00	0.88	5.25	7.29	9.58	8.31	7.75
4.50	450Q140	450VL-BK	143/145TC	16.94	10.88	14.94	9.56	4.63	4.78	0.88	5.06	6.69	9.78	8.94	8.44
4.50	450Q180	450VL-BK	182/184TC	16.94	10.88	14.94	9.56	4.63	4.78	0.88	5.06	7.97	9.78	8.94	8.44
4.50	450Q210	450VL-BK	213/215TC	16.94	10.88	14.94	9.56	4.63	4.78	0.88	5.06	7.97	9.78	8.94	8.44
5.16	516Q180	516VL-BK	182/184TC	20.57	12.50	18.00	10.00	5.44	5.00	1.00	6.38	8.78	11.25	10.56	9.06
5.16	516Q210	516VL-BK	213/215TC	20.57	12.50	18.00	10.00	5.44	5.00	1.00	6.38	8.78	11.25	10.56	9.06
6.00	600Q180	600VL-BK	182/184TC	23.25	14.75	20.88	11.75	6.63	5.88	1.13	7.31	9.68	12.63	12.19	10.00
6.00	600Q210	600VL-BK	213/215TC	23.25	14.75	20.88	11.75	6.63	5.88	1.13	7.31	9.68	12.63	12.19	10.00

CD	NEMA Frame	R	T	INPUT		OUTPUT SHAFT				Stocked Ratios												
						U	V	W Key		5	7.5	10	15	20	25	30	40	50	60	80	100	
				Bore	Keyway			Sq.	Lgth.													
1.33	56C	3.25	0.38	0.63	3/16 X 3/32	0.63	1.94	0.19	1.50	x	x	x	x	x	x	x	x	x	x	x	x	
1.54	56C	3.25	0.44	0.63	3/16 X 3/32	0.75	1.90	0.19	1.50	x	x	x	x	x	x	x	x	x	x	x	x	
1.54	143/145TC	3.25	0.44	0.88	3/16 X 3/32	0.75	1.90	0.19	1.50	x	x	x	x	x	-	-	-	-	-	-	-	
1.75	56C	3.25	0.44	0.63	3/16 X 3/32	0.88	1.84	0.19	1.38	x	x	x	x	x	x	x	x	x	x	x	x	
1.75	143/145TC	3.25	0.44	0.88	3/16 X 3/32	0.88	1.84	0.19	1.38	x	x	x	x	x	x	x	x	x	x	-	-	
2.06	56C	3.25	0.50	0.63	3/16 X 3/32	1.00	2.08	0.25	1.44	x	x	x	x	x	x	x	x	x	x	x	x	
2.06	143/145TC	3.25	0.50	0.88	3/16 X 3/32	1.00	2.08	0.25	1.44	x	x	x	x	x	x	x	x	x	x	-	-	
2.37	56C	3.25	0.50	0.63	3/16 X 3/32	1.13	2.44	0.25	1.75	-	-	-	x	x	x	x	x	x	x	x	x	
2.37	143/145TC	3.25	0.50	0.88	3/16 X 3/32	1.13	2.44	0.25	1.75	x	x	x	x	x	x	x	x	x	x	-	-	
2.62	56C	3.25	0.56	0.63	3/16 X 3/32	1.13	2.52	0.25	1.75	-	-	-	-	x	x	x	x	x	x	x	x	
2.62	143/145TC	3.25	0.56	0.88	3/16 X 3/32	1.13	2.52	0.25	1.75	x	x	x	x	x	x	x	x	x	x	x	-	
2.62	182/184TC	4.25	0.56	1.13	1/4 X 1/8	1.13	2.52	0.25	1.75	x	x	x	x	x	-	-	-	-	-	-	-	
3.00	56C	3.25	0.56	0.63	3/16 X 3/32	1.25	3.36	0.25	1.75	-	-	-	-	-	-	-	x	x	x	x	x	
3.00	143/145TC	3.25	0.56	0.88	3/16 X 3/32	1.25	3.36	0.25	1.75	-	-	x	x	x	x	x	x	x	x	x	x	
3.00	182/184TC	4.25	0.56	1.13	1/4 X 1/8	1.25	3.36	0.25	1.75	x	x	x	x	x	x	x	-	-	-	-	-	
3.25	56C	3.25	0.56	0.63	3/16 X 3/32	1.38	3.42	0.38	2.25	-	-	-	-	-	-	-	x	x	x	x	x	
3.25	143/145TC	3.25	0.56	0.88	3/16 X 3/32	1.38	3.42	0.38	2.25	-	-	x	x	x	x	x	x	x	x	x	x	
3.25	182/184TC	4.25	0.56	1.13	1/4 X 1/8	1.38	3.42	0.38	2.25	x	x	x	x	x	x	x	-	-	-	-	-	
3.75	56C	3.38	0.59	0.63	3/16 X 3/32	1.63	3.50	0.38	2.81	-	-	-	-	-	-	-	x	x	x	-	-	
3.75	143/145TC	3.38	0.59	0.88	3/16 X 3/32	1.63	3.50	0.38	2.81	-	-	x	x	x	x	x	x	x	x	-	-	
3.75	182/184TC	4.50	0.59	1.13	1/4 X 1/8	1.63	3.50	0.38	2.81	-	-	x	x	x	x	x	x	x	-	-	-	
3.75	213/215TC	4.50	0.59	1.38	5/16 X 5/32	1.63	3.50	0.38	2.81	-	-	x	x	-	-	-	-	-	-	-	-	
4.50	143/145TC	3.38	0.69	0.88	3/16 X 3/32	1.63	3.38	0.38	2.50	-	-	-	-	-	-	-	x	x	x	-	-	
4.50	182/184TC	4.50	0.69	1.13	1/4 X 1/8	1.63	3.38	0.38	2.50	-	-	-	x	x	x	x	x	x	x	-	-	
4.50	213/215TC	4.50	0.69	1.38	5/16 X 5/32	1.63	3.38	0.38	2.50	-	-	x	x	x	x	-	-	-	-	-	-	
5.16	182/184TC	4.50	0.78	1.13	1/4 X 1/8	2.00	4.16	0.50	2.81	-	-	-	-	-	-	x	x	x	-	-	-	
5.16	213/215TC	4.50	0.78	1.38	5/16 X 5/32	2.00	4.16	0.50	2.81	-	-	x	x	x	x	x	-	-	-	-	-	
6.00	182/184TC	4.50	0.91	1.13	1/4 X 1/8	2.25	4.56	0.50	3.50	-	-	-	-	x	x	x	x	x	x	-	-	
6.00	213/215TC	4.50	0.91	1.38	5/16 X 5/32	2.25	4.56	0.50	3.50	-	-	-	-	-	x	x	x	x	x	-	-	

Dimensions (Inches) for Style "QVH" - With Vertical High Base

C.D.	Component ◆		HB	KB	C.D.	Component ◆		HB	KB
	Basic Unit	NEMA Frame				Basic Unit	NEMA Frame		
1.33	133Q56	56C	3.56	5.62	3.25	325Q56	56C	6.25	9.89
1.54	154Q56	56C	4.38	6.79	3.25	325Q140	143/145TC	6.25	9.89
1.54	154Q140	143/145TC	4.38	6.79	3.25	325Q180	182/184TC	6.25	9.89
1.75	175Q56	56C	4.38	6.85	3.75	375Q56	56C	7.00	11.33
1.75	175Q140	143/145TC	4.38	6.85	3.75	375Q140	143/145TC	7.00	11.33
2.06	206Q56	56C	4.88	7.48	3.75	375Q180	182/184TC	7.00	11.33
2.06	206Q140	143/145TC	4.88	7.48	3.75	375Q210	213/215TC	7.00	11.33
2.37	237Q56	56C	5.25	7.95	4.50	450Q140	143/145TC	8.56	13.28
2.37	237Q140	143/145TC	5.25	7.95	4.50	450Q180	182/184TC	8.56	13.28
2.62	262Q56	56C	5.56	8.67	4.50	450Q210	213/215TC	8.56	13.28
2.62	262Q140	143/145TC	5.56	8.67	5.16	516Q180	182/184TC	8.63	13.50
2.62	262Q180	182/184TC	5.56	8.67	5.16	516Q210	213/215TC	8.63	13.50
3.00	300Q56	56C	5.88	9.27	6.00	600Q180	182/184TC	9.63	14.94
3.00	300Q140	143/145TC	5.88	9.27	6.00	600Q210	213/215TC	9.63	14.94
3.00	300Q180	182/184TC	5.88	9.27					

Fan Kit

Ref. No.	Fan Kit	AA		Wt. Lbs.
		Tap	Deep	
375Q	375 FAN	3/8-24	3/4	2.8
450Q	450 FAN	3/8-24	3/4	2.8
516Q	516 FAN	3/8-24	3/4	2.8
600Q	600 FAN	3/8-24	3/4	4.2

★ To complete Part No. add shaft assembly (L, R, LR) and ratio symbol to size - for example 133Q56H10.

◆ Components needed to make assembled reducer must be ordered separately. If Fan Kit is required, see the table at the left.

Consult factory for ratios not shown as standard.

133-325 Vertical High and Low Base Kits shown on page C-65.
133-325 Vertical J Base Kits shown on page C-66.
375-600 Vertical High and Low Base Kits shown on page C-66.
375-516 Vertical J Base Kits shown on page C-66.

Style QVJ

Vertical "J" Base

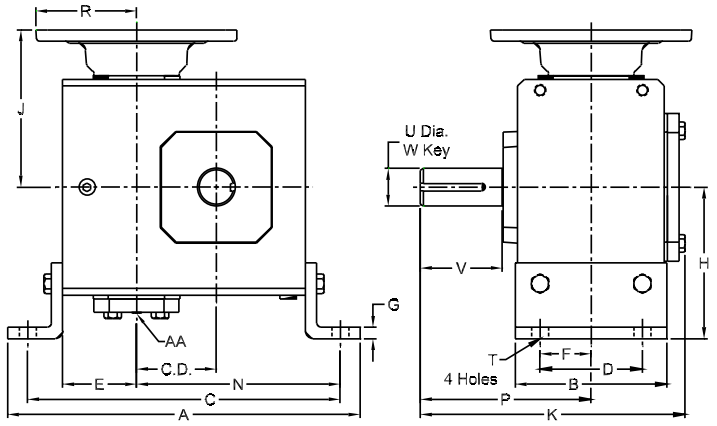

Assembly Drawing and Sample of Components

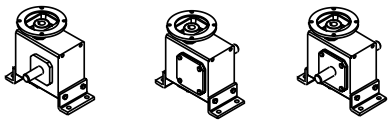

133Q56L10	133Q56R10	133Q56LR10
133VJ-BK	133VJ-BK	133VJ-BK

NOTE: If mounting a fan unit, fan extends beyond "H" dimension.



Dimensions (Inches) for Style "QVJ" - With Vertical "J" Base

C.D.	Components◆ Part No. ★	Components◆ Base Kit	N.E.M.A. Frame	A	B	C	D	E	F	G	H	J	K	N	P
1.33	**133Q56**	**133VJ-BK**	56C	7.42	2.75	6.42	2.00	1.61	1.00	0.25	2.94	3.46	6.06	3.93	4.00
1.54	**154Q56**	**154VJ-BK**	56C	8.14	3.50	7.08	2.75	1.93	1.38	0.25	3.50	3.99	6.72	4.30	4.31
1.54	**154Q140**	**154VJ-BK**	143/145TC	8.14	3.50	7.08	2.75	1.93	1.38	0.25	3.50	3.99	6.72	4.30	4.31
1.75	**175Q56**	**175VJ-BK**	56C	8.51	3.50	7.63	2.50	1.94	1.25	0.25	3.50	4.09	6.78	4.75	4.31
1.75	**175Q140**	**175VJ-BK**	143/145TC	8.51	3.50	7.63	2.50	1.94	1.25	0.25	3.50	4.09	6.78	4.75	4.31
2.06	**206Q56**	**206VJ-BK**	56C	9.76	4.00	8.63	2.63	2.04	1.31	0.38	4.01	4.46	7.28	5.46	4.68
2.06	**206Q140**	**206VJ-BK**	143/145TC	9.76	4.00	8.63	2.63	2.04	1.31	0.38	4.01	4.46	7.28	5.46	4.68
2.37	**237Q56**	**237VJ-BK**	56C	10.31	4.00	9.19	2.88	2.06	1.44	0.38	4.06	4.63	7.84	6.01	5.14
2.37	**237Q140**	**237VJ-BK**	143/145TC	10.31	4.00	9.19	2.88	2.06	1.44	0.38	4.06	4.63	7.84	6.01	5.14
2.62	**262Q56**	**262VJ-BK**	56C	11.62	5.00	10.38	3.38	2.43	1.69	0.38	5.00	5.19	8.74	6.76	5.63
2.62	**262Q140**	**262VJ-BK**	143/145TC	11.62	5.00	10.38	3.38	2.43	1.69	0.38	5.00	5.19	8.74	6.76	5.63
2.62	**262Q180**	**262VJ-BK**	182/184TC	11.62	5.00	10.38	3.38	2.43	1.69	0.38	5.00	5.62	8.74	6.76	5.63
3.00	**300Q56**	**300VJ-BK**	56C	12.64	6.00	11.38	3.88	2.63	1.94	0.38	5.62	5.95	10.14	7.50	6.75
3.00	**300Q140**	**300VJ-BK**	143/145TC	12.64	6.00	11.38	3.88	2.63	1.94	0.38	5.62	5.95	10.14	7.50	6.75
3.00	**300Q180**	**300VJ-BK**	182/184TC	12.64	6.00	11.38	3.88	2.63	1.94	0.38	5.62	6.15	10.14	7.50	6.75
3.25	**325Q56**	**325VJ-BK**	56C	13.14	6.00	11.88	3.88	2.63	1.94	0.38	5.63	6.14	10.70	8.00	7.06
3.25	**325Q140**	**325VJ-BK**	143/145TC	13.14	6.00	11.88	3.88	2.63	1.94	0.38	5.63	6.14	10.70	8.00	7.06
3.25	**325Q180**	**325VJ-BK**	182/184TC	13.14	6.00	11.88	3.88	2.63	1.94	0.38	5.63	6.34	10.70	8.00	7.06
3.75	**375Q56**	**375VJ-BK**	56C	15.06	6.25	13.31	4.75	2.94	2.38	0.88	6.00	6.01	9.63	9.06	7.75
3.75	**375Q140**	**375VJ-BK**	143/145TC	15.06	6.25	13.31	4.75	2.94	2.38	0.88	6.00	6.01	9.63	9.06	7.75
3.75	**375Q180**	**375VJ-BK**	182/184TC	15.06	6.25	13.31	4.75	2.94	2.38	0.88	6.00	7.29	9.63	9.06	7.75
3.75	**375Q210**	**375VJ-BK**	213/215TC	15.06	6.25	13.31	4.75	2.94	2.38	0.88	6.00	7.29	9.63	9.06	7.75
4.50	**450Q140**	**450VJ-BK**	143/145TC	16.94	7.38	14.94	5.81	3.06	2.91	0.88	7.38	6.69	11.13	10.50	8.44
4.50	**450Q180**	**450VJ-BK**	182/184TC	16.94	7.38	14.94	5.81	3.06	2.91	0.88	7.38	7.97	11.13	10.50	8.44
4.50	**450Q210**	**450VJ-BK**	213/215TC	16.94	7.38	14.94	5.81	3.06	2.91	0.88	7.38	7.97	11.13	10.50	8.44
5.16	**516Q180**	**516VJ-BK**	182/184TC	19.38	7.38	17.50	5.81	3.40	2.91	1.00	7.75	8.78	11.31	12.35	9.06
5.16	**516Q210**	**516VJ-BK**	213/215TC	19.38	7.38	17.50	5.81	3.40	2.91	1.00	7.75	8.78	11.31	12.35	9.06

C D	N.E.M.A. Frame	R	T	INPUT Bore	INPUT Keyway	OUTPUT SHAFT U	OUTPUT SHAFT V	OUTPUT SHAFT W K ey Sq.	OUTPUT SHAFT W K ey Lgth.	Stock Ratios marked x: 5	7.5	10	15	20	25	30	40	50	60	80	100
1.33	56C	3.25	0.38	0.63	0.19	0.63	1.94	0.19	1.50	x	x	x	x	x	x	x	x	x	x	x	x
1.54	56C	3.25	0.44	0.63	0.19	0.75	1.90	0.19	1.50	x	x	x	x	x	x	x	x	x	x	x	x
1.54	143/145TC	3.25	0.44	0.88	0.19	0.75	1.90	0.19	1.50	x	x	x	x	x	-	-	-	-	-	-	-
1.75	56C	3.25	0.44	0.63	0.19	0.88	1.84	0.19	1.38	x	x	x	x	x	x	x	x	x	x	x	x
1.75	143/145TC	3.25	0.44	0.88	0.19	0.88	1.84	0.19	1.38	x	x	x	x	x	x	x	x	x	x	-	-
2.06	56C	3.25	0.56	0.63	0.19	1.00	2.08	0.25	1.44	x	x	x	x	x	x	x	x	x	x	x	x
2.06	143/145TC	3.25	0.56	0.88	0.19	1.00	2.08	0.25	1.44	x	x	x	x	x	x	x	x	x	x	-	-
2.37	56C	3.25	0.69	0.63	0.19	1.13	2.44	0.25	1.75	-	-	-	x	x	x	x	x	x	x	x	x
2.37	143/145TC	3.25	0.69	0.88	0.19	1.13	2.44	0.25	1.75	x	x	x	x	x	x	x	x	x	x	-	-
2.62	56C	3.25	0.56	0.63	0.19	1.13	2.52	0.25	1.75	-	-	-	-	x	x	x	x	x	x	x	x
2.62	143/145TC	3.25	0.56	0.88	0.19	1.13	2.52	0.25	1.75	x	x	x	x	x	x	x	x	x	x	x	-
2.62	182/184TC	4.25	0.56	1.13	0.25	1.13	2.52	0.25	1.75	x	x	x	x	x	-	-	-	-	-	-	-
3.00	56C	3.25	0.56	0.63	0.19	1.25	3.36	0.25	1.75	-	-	-	-	-	-	-	x	x	x	x	x
3.00	143/145TC	3.25	0.56	0.88	0.19	1.25	3.36	0.25	1.75	-	-	x	x	x	x	x	x	x	x	x	x
3.00	182/184TC	4.25	0.56	1.13	0.25	1.25	3.36	0.25	1.75	x	x	x	x	x	x	x	-	-	-	-	-
3.25	56C	3.25	0.56	0.63	0.19	1.38	3.42	0.38	2.25	-	-	-	-	-	-	-	x	x	x	x	x
3.25	143/145TC	3.25	0.56	0.88	0.19	1.38	3.42	0.38	2.25	-	-	x	x	x	x	x	x	x	x	x	x
3.25	182/184TC	4.25	0.56	1.13	0.25	1.38	3.42	0.38	2.25	x	x	x	x	x	x	x	-	-	-	-	-
3.75	56C	3.38	0.59	0.63	0.19	1.63	3.50	0.38	2.81	-	-	-	-	-	-	-	x	x	x	-	-
3.75	143/145TC	3.38	0.59	0.88	0.19	1.63	3.50	0.38	2.81	-	-	x	x	x	x	x	x	x	x	-	-
3.75	182/184TC	4.50	0.59	1.13	0.25	1.63	3.50	0.38	2.81	-	-	x	x	x	x	x	x	x	-	-	-
3.75	213/215TC	4.50	0.59	1.38	0.31	1.63	3.50	0.38	2.81	-	-	x	x	-	-	-	-	-	-	-	-
4.50	143/145TC	3.38	0.69	0.88	0.19	1.63	3.38	0.38	2.50	-	-	-	-	-	-	-	x	x	x	-	-
4.50	182/184TC	4.50	0.69	1.13	0.25	1.63	3.38	0.38	2.50	-	-	-	x	x	x	x	x	x	x	-	-
4.50	213/215TC	4.50	0.69	1.38	0.31	1.63	3.38	0.38	2.50	-	-	x	x	x	x	-	-	-	-	-	-
5.16	182/184TC	4.50	0.78	1.13	0.25	2.00	4.16	0.50	2.81	-	-	-	-	-	-	-	x	x	x	-	-
5.16	213/215TC	4.50	0.78	1.38	0.31	2.00	4.16	0.50	2.81	-	-	x	x	x	x	x	-	-	-	-	-
6.00	182/184TC	4.50	0.91	1.13	0.31	2.25	4.56	0.50	3.50	-	-	-	-	x	x	x	x	x	x	-	-
6.00	213/215TC	4.50	0.91	1.38	0.31	2.25	4.56	0.50	3.50	-	-	-	-	-	x	x	x	x	x	-	-

Fan Kit

Ref. No.	Fan Kit	AA Tap	AA Deep	Wt. Lbs.
375Q	375 FAN	3/8-24	3/4	2.8
450Q	450 FAN	3/8-24	3/4	2.8
516Q	516 FAN	3/8-24	3/4	2.8
600Q	600 FAN	3/8-24	3/4	4.2

★ To complete Part No. add shaft assembly (L, R, LR) and ratio symbol to size - for example 133Q56H10.
◆ Components needed to make assembled reducer must be ordered separately. If Fan Kit is required, see the table at the left.
Consult factory for ratios not shown as standard.
133-325 Vertical J Base Kits shown on page C-66.
375-516 Vertical J Base Kits shown on page C-66.

Style CVL

Vertical Low Base

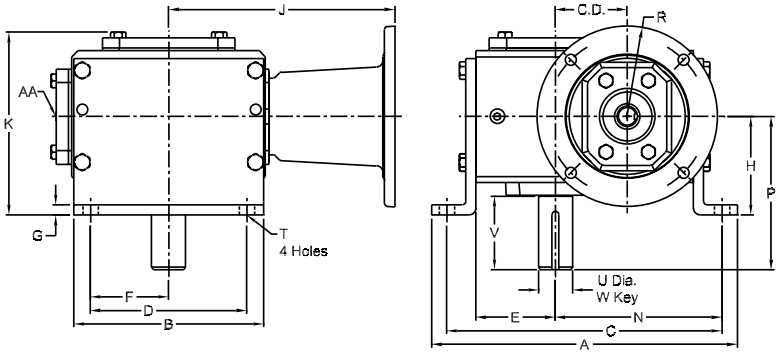

Assembly Drawing and Sample of Components

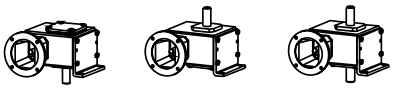

133UL10	133UR10	133ULR10
133VL-BK	133VL-BK	133VL-BK
133MAK56	133MAK56	133MAK56

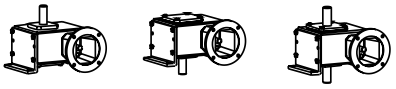

133UL10	133UR10	133ULR10
133VL-BK	133VL-BK	133VL-BK
133MAK56	133MAK56	133MAK56

Style CVH

Vertical High Base

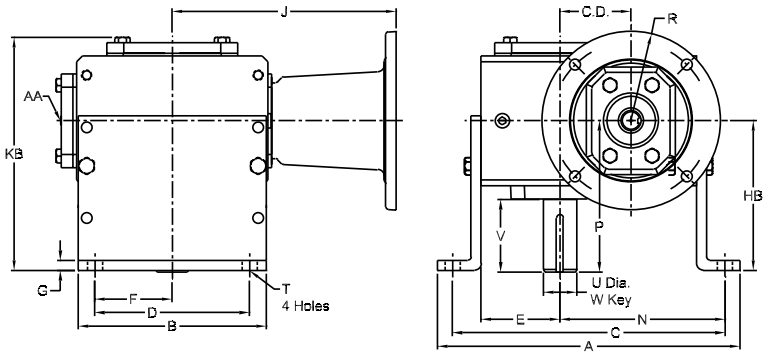

Assembly Drawing and Sample of Components

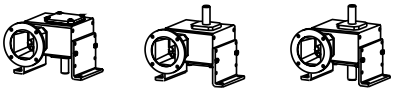

133UL10	133UR10	133ULR10
133VH-BK	133VH-BK	133VH-BK
133MAK56	133MAK56	133MAK56

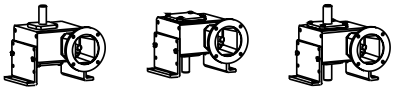

133UL10	133UR10	133ULR10
133VH-BK	133VH-BK	133VH-BK
133MAK56	133MAK56	133MAK56

Style CVJ

Vertical "J" Base

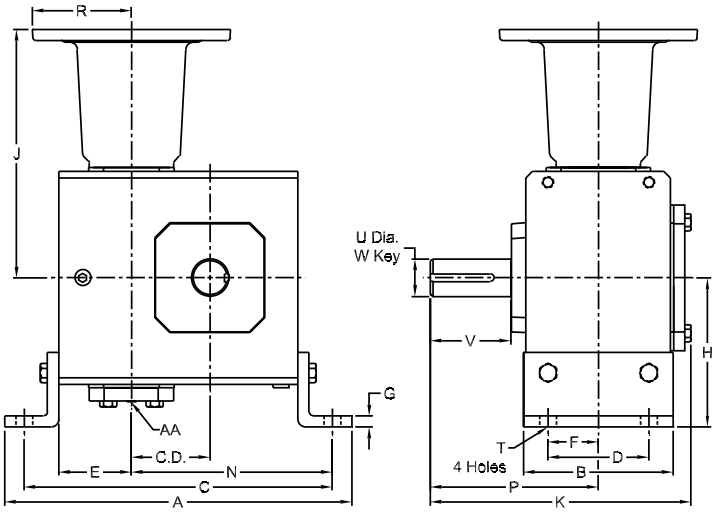

Assembly Drawing and Sample of Components

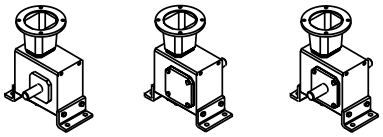

133UL10	133UR10	133ULR10
133VJ-BK	133VJ-BK	133VJ-BK
133MAK56	133MAK56	133MAK56

Note: If mounting a fan unit, fan extends beyond "H" dimension.

Dimensions (Inches) for Style "CVL" - With Vertical Low Base

CD	Component ◆			A	B	C	D	E	F	G	H	K	N	P	T
	Basic Unit ★	Adapter Kit	Base Kit												
1.33	133U	See Adapter Kit Table Below	133VL-BK	7.26	4.00	6.50	3.00	1.72	1.50	0.25	2.63	4.69	3.82	4.00	0.38
1.54	154U		154VL-BK	7.88	5.00	7.00	4.00	1.91	2.00	0.25	3.00	5.41	4.35	4.31	0.44
1.75	175U		175VL-BK	8.25	5.00	7.37	4.00	2.06	2.00	0.25	3.00	5.47	4.45	4.31	0.44
2.06	206U		206VL-BK	9.38	6.00	8.38	4.88	2.28	2.44	0.38	3.13	5.73	4.82	4.68	0.50
2.37	237U		237VL-BK	9.94	6.00	8.81	4.88	2.50	2.44	0.38	3.38	6.08	5.51	5.14	0.50
2.62	262U		262VL-BK	11.24	7.00	10.12	5.75	2.94	2.88	0.38	3.63	6.74	6.07	5.63	0.56
3.00	300U		300VL-BK	12.50	8.00	11.13	6.00	3.25	3.00	0.38	3.94	7.33	6.57	6.75	0.56
3.25	325U		325VL-BK	13.00	8.50	11.88	6.13	3.50	3.06	0.38	4.69	8.33	6.76	7.06	0.56
3.75	375U		375VL-BK	15.69	9.50	13.94	8.00	3.44	4.00	0.88	5.25	9.58	8.38	7.75	0.59
4.50	450U		450VL-BK	16.94	10.88	14.94	9.56	4.63	4.78	0.88	5.06	9.78	9.59	8.44	0.69
5.16	516U		516VL-BK	20.57	12.50	18.00	10.00	5.44	5.00	1.00	6.38	11.25	10.69	9.06	0.78
6.00	600U		600VL-BK	23.25	14.75	20.88	11.75	6.63	5.88	1.13	7.31	12.63	11.75	10.00	0.91

CD	OUTPUT SHAFT				Stocked Ratios											
	U	V	W Key		5	7.5	10	15	20	25	30	40	50	60	80	100
			Sq.	Lgth.												
1.33	0.63	1.94	0.19	1.50	x	x	x	x	x	x	x	x	x	x	x	x
1.54	0.75	1.90	0.19	1.50	x	x	x	x	x	x	x	x	x	x	x	x
1.75	0.88	1.84	0.19	1.38	x	x	x	x	x	x	x	x	x	x	x	x
2.06	1.00	2.08	0.25	1.44	x	x	x	x	x	x	x	x	x	x	x	x
2.37	1.13	2.44	0.25	1.75	x	x	x	x	x	x	x	x	x	x	x	x
2.62	1.13	2.52	0.25	1.75	x	x	x	x	x	x	x	x	x	x	x	x
3.00	1.25	3.36	0.25	1.75	x	x	x	x	x	x	x	x	x	x	x	x
3.25	1.38	3.42	0.31	2.63	x	x	x	x	x	x	x	x	x	x	x	x
3.75	1.63	3.50	0.38	2.81	-	-	x	x	x	x	x	x	x	x	-	-
4.50	1.63	3.38	0.38	2.50	-	-	x	x	x	x	x	x	x	x	-	-
5.16	2.00	4.16	0.50	2.81	-	-	x	x	x	x	x	x	x	x	-	-
6.00	2.25	4.56	0.50	3.50	x	-	x	x	x	x	x	x	x	x	-	-

Dimensions (Inches) for Style "CVH"

Component ◆			HB	KB
Basic Unit ★	Adapter Kit	Base Kit		
133U	See Adapter Kit Table Below	133VH-BK	3.56	5.62
154U		154VH-BK	4.38	6.79
175U		175VH-BK	4.38	6.85
206U		206VH-BK	4.88	7.48
237U		237VH-BK	5.25	7.95
262U		262VH-BK	5.56	8.67
300U		300VH-BK	5.88	9.27
325U		325VH-BK	6.25	9.89
375U		375VH-BK	7.00	11.33
450U		450VH-BK	8.56	13.28
516U		516VH-BK	8.63	13.50
600U		600VH-BK	9.63	14.94

Fan Kit

Basic Unit ★	Fan Kit	AA		Wt. Lbs.
		Tap	Deep	
375U	375 FAN	3/8-24	3/4	2.8
450U	450 FAN	3/8-24	3/4	2.8
516U	516 FAN	3/8-24	3/4	2.8
600U	600 FAN	3/8-24	3/4	4.2

Dimensions (Inches) for Style "CVJ" - Vertical "J" Base

Components ◆			A	B	C	D	E	F	G	H	K	N	P	T
Base Unit ★	Adapter Kit	Base Kit												
133U	See Adapter Kit Table Below	133VJ-B K	7.42	2.75	6.42	2.00	1.61	1.00	0.25	2.94	6.06	3.93	4.00	0.38
154U		154VJ-BK	8.14	3.50	7.08	2.75	1.93	1.38	0.25	3.50	6.72	4.30	4.31	0.44
175U		175VJ-BK	8.51	3.50	7.63	2.50	1.94	1.25	0.25	3.50	6.78	4.75	4.31	0.44
206U		206VJ-BK	9.76	4.00	8.63	2.63	2.04	1.31	0.38	4.01	7.28	5.46	4.68	0.56
237U		237VJ-BK	10.31	4.00	9.19	2.88	2.06	1.44	0.38	4.06	7.84	6.01	5.14	0.69
262U		262VJ-BK	11.62	5.00	10.38	3.38	2.43	1.69	0.38	5.00	8.74	6.76	5.63	0.56
300U		300VJ-BK	12.64	6.00	11.38	3.88	2.63	1.94	0.38	5.62	10.14	7.50	6.75	0.56
325U		325VJ-BK	13.14	6.00	11.88	3.88	2.63	1.94	0.38	5.63	10.70	8.00	7.06	0.56
375U		375VJ-BK	15.06	6.25	13.31	4.75	2.94	2.38	0.88	6.00	11.88	9.06	7.75	0.59
450U		450VJ-BK	16.94	7.38	14.94	5.81	3.06	2.91	0.88	7.38	13.16	8.94	8.44	0.69
516U		516VJ-BK	19.38	7.38	17.50	5.81	3.40	2.91	1.00	7.75	13.91	12.35	9.06	0.78

N.E.M.A. Frame Adapter Kits and Dimensions

C.D .	56C			143/145TC			182/184TC			213/215TC			254/256TC		
	Input: .625 Kw.: 3/16 x 3/32			Input: .875 Kw.: 3/16 x 3/32			Input: 1.125 KW.: 1/4 x 1/8			Input: 1.375 Kw.: 5/16 x 5/32			Input: 1.625 Kw.: 3/8 x 3/16		
	Adapter Kit No .	J	R	Adapter Kit No.	J	R	Adapter Kit No.	J	R	Adapter Kit No.	J	R	Adapter Kit No.	J	R
1.33	133MAK56	6.07	3.25	133MAK140	6.07	3.25									
1.54	154MAK56	6.6	3.25	154MAK140	6.6	3.25									
1.75	175MAK56	6.7	3.25	175MAK140	6.7	3.25									
2.06	206MAK56	7.07	3.25	206MAK140	7.07	3.25									
2.37	237MAK56	7.76	3.25	237MAK140	7.76	3.25	237MAK180	8.76	4.5						
2.62	262MAK56	8.32	3.25	262MAK140	8.32	3.25	262MAK180	9.32	4.5						
3.00	300MAK56	8.82	3.25	300MAK140	8.82	3.25	300MAK180	9.82	4.5						
3.25	325MAK56	9.01	3.25	325MAK140	9.01	3.25	325MAK180	10.01	4.5	325MAK210	10.01	4.5			
3.75	375MAK56	11.47	3.38	375MAK140	11.47	3.38	375MAK180	12.92	4.5	375MAK210	12.92	4.5			
4.50				450MAK140	12.15	3.38	450MAK180	13.6	4.5	450MAK210	13.6	4.5			
5.16							516MAK180	14.4	4.5	516MAK210	14.4	4.5			
6.00							600MAK180	16.97	4.5	600MAK210	16.97	4.5	600MAK250	16.97	4.5

★ To complete Part No. add shaft assembly (L, R, LR) and ratio symbol to size - for example 133ULR10.
◆ Components needed to make assembled reducer must be ordered separately. If Fan Kit is required, see the table above.
Consult factory for ratios not shown as standard.
133-325 Vertical High and Low Base Kits shown on page C-65.
133-325 Vertical J Base Kits shown on page C-66.
375-600 Vertical High and Low Base Kits shown on page C-66.
375-516 Vertical J Base Kits shown on page C-66.

Style UF

Flange Bracket

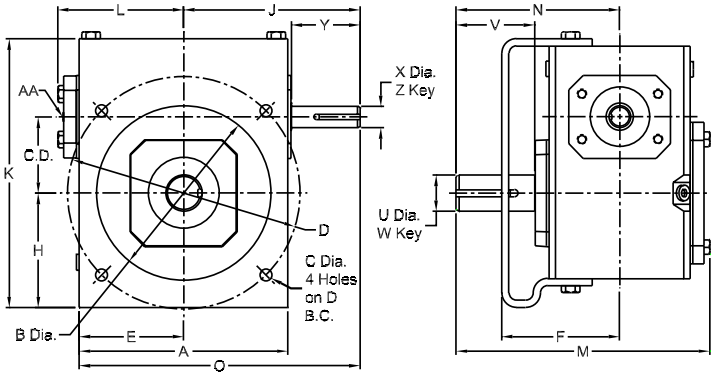

Assembly Drawing and Sample of Components

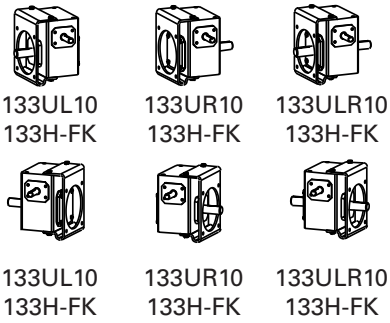

133UL10 133H-FK	133UR10 133H-FK	133ULR10 133H-FK
133UL10 133H-FK	133UR10 133H-FK	133ULR10 133H-FK

Style CF

Flange Bracket

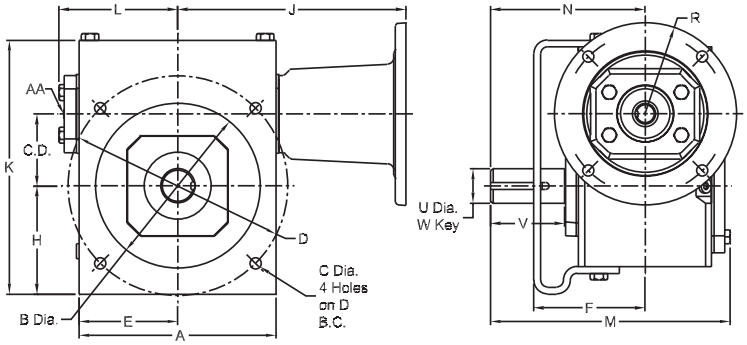

Assembly Drawing and Sample of Components

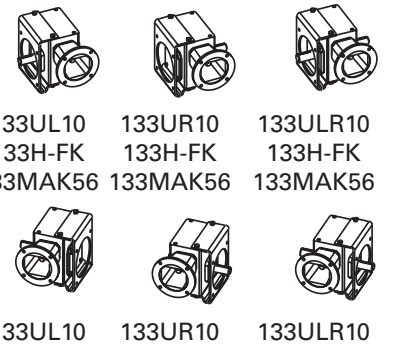

133UL10 133H-FK 133MAK56	133UR10 133H-FK 133MAK56	133ULR10 133H-FK 133MAK56
133UL10 133H-FK 133MAK56	133UR10 133H-FK 133MAK56	133ULR10 133H-FK 133MAK56

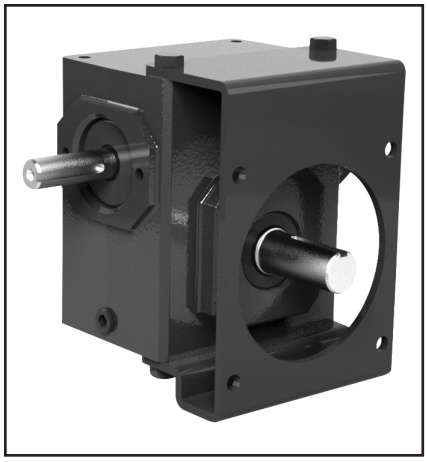

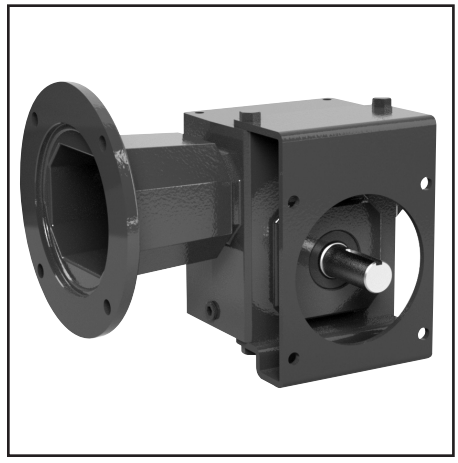

Dimensions (Inches) for Style "UF" - With Flange

C.D.	Components ◆		A	B	C	D	E	F	H	J	K	L	M	N	O
	Basic Unit ◆	Flange Kit													
1.33	133U	133H-FK	4.25	3.62	0.34	5.00	2.13	3.00	2.42	3.82	5.55	2.61	6.06	4.00	5.95
1.54	154U	154H-FK	4.75	3.63	0.34	5.00	2.38	3.56	2.54	4.35	6.20	3.14	6.72	4.31	7.07
1.75	175U	175H-FK	4.81	4.06	0.34	5.88	2.41	3.50	2.78	4.45	6.66	3.24	6.78	4.31	6.86
2.06	206U	206H-FK	5.75	4.50	0.41	6.50	2.88	3.75	3.18	4.82	7.47	3.61	7.28	4.68	7.70
2.37	237U	237H-FK	6.00	5.00	0.41	7.50	3.00	3.72	3.61	5.51	8.30	3.77	7.84	5.14	8.51
2.62	262U	262H-FK	7.18	6.00	0.41	8.00	3.59	4.06	3.94	6.07	9.25	4.34	8.74	5.63	9.66
3.00	300U	300H-FK	8.50	7.00	0.41	9.00	4.25	4.50	4.14	6.57	10.02	4.84	10.14	6.75	11.25
3.25	325U	325H-FK	8.50	7.00	0.56	10.00	4.25	5.25	4.75	6.76	10.89	5.02	10.70	7.06	11.31
3.75	375U	375H-FK	9.54	8.00	0.56	11.50	4.77	5.46	5.04	8.38	11.85	5.74	11.88	7.75	13.13
4.50	450U	450H-FK	10.88	9.00	0.56	11.50	5.44	6.88	5.34	9.59	13.10	6.42	13.16	8.44	15.09
5.16	516U	516H-FK	12.50	10.00	0.69	14.00	6.25	6.58	6.57	10.69	15.33	7.42	13.91	9.06	16.94
6.00	600U	600H-FK	14.50	12.00	0.69	15.56	7.25	7.22	7.85	11.75	18.22	8.25	15.31	10.00	19.00

C.D.	OUTPUT SHAFT				INPUT SHAFT				Stock Ratios marked "x "								
	U	V	WKey		X	Y	ZKey		5	10	15	20	25	30	40	50	60
			Sq.	Lgth.			Sq.	Lgth.									
1.33	0.63	1.94	0.19	1.50	0.50	1.76	0.13	1.00	x	x	x	x	x	x	x	x	x
1.54	0.75	1.90	0.19	1.50	0.63	1.76	0.19	0.94	x	x	x	x	x	x	x	x	x
1.75	0.88	1.84	0.19	1.38	0.63	1.76	0.19	1.38	x	x	x	x	x	x	x	x	x
2.06	1.00	2.08	0.25	1.44	0.63	1.76	0.19	1.38	x	x	x	x	x	x	x	x	x
2.37	1.13	2.44	0.25	1.75	0.75	2.38	0.19	1.63	x	x	x	x	x	x	x	x	x
2.62	1.13	2.52	0.25	1.75	0.75	2.38	0.19	1.63	x	x	x	x	x	x	x	x	x
3.00	1.25	3.36	0.25	1.75	0.88	2.38	0.19	1.31	x	x	x	x	x	x	x	x	x
3.25	1.38	3.42	0.31	2.63	0.88	2.38	0.19	1.63	-	x	x	x	x	x	x	x	x
3.75	1.63	3.50	0.38	2.81	1.00	2.91	0.25	1.75	-	x	x	x	x	x	x	x	x
4.50	1.63	3.38	0.38	2.50	1.13	3.48	0.25	2.50	-	x	x	x	x	x	x	x	x
5.16	2.00	4.16	0.50	2.81	1.25	3.75	0.25	2.56	-	x	x	x	x	x	x	x	x
6.00	2.25	4.56	0.50	3.50	1.50	3.75	0.38	2.94	x	x	x	x	x	x	x	x	x

Dimensions (Inches) for Style "CF"

Components ◆		
Basic Unit ★	Adapter Kit	Flange Kit
133U	See Adapter Kit Table Below	133H-FK
154U		154H-FK
175U		175H-FK
206U		206H-FK
237U		237H-FK
262U		262H-FK
300U		300H-FK
325U		325H-FK
375U		375H-FK
450U		450H-FK
516U		516H-FK
600U		600H-FK

Fan Kit

Basic Unit ★	Fan Kit	AA		L	Wt. Lbs.
		Tap	Deep		
375U	375 FAN	3/8-24	3/4	7.66	2.8
450U	450 FAN	3/8-24	3/4	8.36	2.8
516U	516 FAN	3/8-24	3/4	9.18	2.8
600U	600 FAN	3/8-24	3/4	10.70	4.2

N.E.M.A. Frame Adapter Kits and Dimensions

C.D.	56C Input: .625 Kw.: 3/16 x 3/32			143/145TC Input: .875 Kw.: 3/16 x 3/32			182/184TC Input: 1.125 KW.: 1/4 x 1/8			213/215TC Input: 1.375 Kw.: 5/16 x 5/32			254/256TC Input: 1.625 Kw.: 3/8 x 3/16		
	Adapter Kit No.	J	R	Adapter Kit No.	J	R	Adapter Kit No.	J	R	Adapter Kit No.	J	R	Adapter Kit No.	J	R
1.33	133MAK56	6.07	3.25	133MAK140	6.07	3.25									
1.54	154MAK56	6.6	3.25	154MAK140	6.6	3.25									
1.75	175MAK56	6.7	3.25	175MAK140	6.7	3.25									
2.06	206MAK56	7.07	3.25	206MAK140	7.07	3.25									
2.37	237MAK56	7.76	3.25	237MAK140	7.76	3.25	237MAK180	8.76	4.5						
2.62	262MAK56	8.32	3.25	262MAK140	8.32	3.25	262MAK180	9.32	4.5						
3.00	300MAK56	8.82	3.25	300MAK140	8.82	3.25	300MAK180	9.82	4.5						
3.25	325MAK56	9.01	3.25	325MAK140	9.01	3.25	325MAK180	10.01	4.5	325MAK210	10.01	4.5			
3.75	375MAK56	11.47	3.38	375MAK140	11.47	3.38	375MAK180	12.92	4.5	375MAK210	12.92	4.5			
4.50				450MAK140	12.15	3.38	450MAK180	13.6	4.5	450MAK210	13.6	4.5			
5.16							516MAK180	14.4	4.5	516MAK210	14.4	4.5			
6.00							600MAK180	16.97	4.5	600MAK210	16.97	4.5	600MAK250	16.97	4.5

★ To complete Part No. add shaft assembly (L, R, LR) and ratio symbol to size - for example 133ULR10.
◆ Components needed to make assembled reducer must be ordered separately. If Fan Kit is required, see the table above.
Consult factory for ratios not shown as standard.
Motor Adapter Kits Shown on page C-64.
Flange Kits shown on page C-65.

Style QF

Flange Bracket

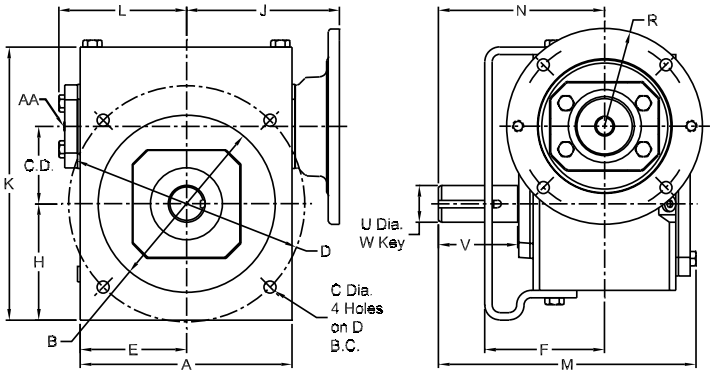

Assembly Drawing and Sample of Components

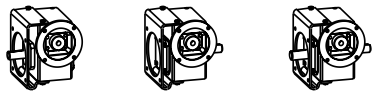

133Q56L10 133H-FK | 133Q56R10 133H-FK | 133Q56LR10 133H-FK

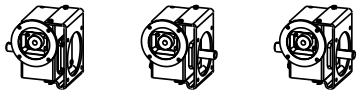

133Q56L10 133H-FK | 133Q56R10 133H-FK | 133Q56LR10 133H-FK



Dimensions (Inches) for Style "QF" - With Flange

C.D .	Components ◆		N.E.M.A. Frame	A	B	C	D	E	F	H	J	K	L	M
	Part No. ★	Flange Kit												
1.33	133Q56	133H-FK	56C	4.25	3.62	0.34	5.00	2.13	3.00	2.42	3.46	5.55	2.61	6.06
1.54	154Q56	154H-FK	56C	4.75	3.63	0.34	5.00	2.38	3.56	2.54	3.99	6.20	3.14	6.72
1.54	154Q140	154H-FK	143/145TC	4.75	3.63	0.34	5.00	2.38	3.56	2.54	3.99	6.20	3.14	6.72
1.75	175Q56	175H-FK	56C	4.81	4.06	0.34	5.88	2.41	3.50	2.78	4.09	6.66	3.24	6.78
1.75	175Q140	175H-FK	143/145TC	4.81	4.06	0.34	5.88	2.41	3.50	2.78	4.09	6.66	3.24	6.78
2.06	206Q56	206H-FK	56C	5.75	4.50	0.41	6.50	2.88	3.75	3.18	4.46	7.47	3.61	7.07
2.06	206Q140	206H-FK	143/145TC	5.75	4.50	0.41	6.50	2.88	3.75	3.18	4.46	7.47	3.61	7.07
2.37	237Q56	237H-FK	56C	6.00	5.00	0.41	7.50	3.00	3.72	3.61	4.63	8.30	3.77	7.84
2.37	237Q140	237H-FK	143/145TC	6.00	5.00	0.41	7.50	3.00	3.72	3.61	4.63	8.30	3.77	7.84
2.62	262Q56	262H-FK	56C	7.18	6.00	0.41	8.00	3.59	4.06	3.94	5.19	9.25	4.34	8.74
2.62	262Q140	262H-FK	143/145TC	7.18	6.00	0.41	8.00	3.59	4.06	3.94	5.19	9.25	4.34	8.74
2.62	262Q180	262H-FK	182/184TC	7.18	6.00	0.41	8.00	3.59	4.06	3.94	5.62	9.25	4.34	8.74
3.00	300Q56	300H-FK	56C	8.50	7.00	0.41	9.00	4.25	4.50	4.14	5.95	10.02	4.84	10.14
3.00	300Q140	300H-FK	143/145TC	8.50	7.00	0.41	9.00	4.25	4.50	4.14	5.95	10.02	4.84	10.14
3.00	300Q180	300H-FK	182/184TC	8.50	7.00	0.41	9.00	4.25	4.50	4.14	6.15	10.02	4.84	10.14
3.25	325Q56	325H-FK	56C	8.50	7.00	0.56	10.00	4.25	5.25	4.75	6.14	10.89	5.02	10.70
3.25	325Q140	325H-FK	143/145TC	8.50	7.00	0.56	10.00	4.25	5.25	4.75	6.14	10.89	5.02	10.70
3.25	325Q180	325H-FK	182/184TC	8.50	7.00	0.56	10.00	4.25	5.25	4.75	6.34	10.89	5.02	10.70
3.75	375Q56	375H-FK	56C	9.54	8.00	0.56	11.50	4.77	5.46	5.04	6.01	11.85	5.74	11.88
3.75	375Q140	375H-FK	143/145TC	9.54	8.00	0.56	11.50	4.77	5.46	5.04	6.01	11.85	5.74	11.88
3.75	375Q180	375H-FK	182/184TC	9.54	8.00	0.56	11.50	4.77	5.46	5.04	7.29	11.85	5.74	11.88
3.75	375Q210	375H-FK	213/215TC	9.54	8.00	0.56	11.50	4.77	5.46	5.04	7.29	11.85	5.74	11.88
4.50	450Q140	450H-FK	143/145TC	10.88	9.00	0.56	11.50	5.44	6.88	5.34	6.69	13.10	6.42	13.16
4.50	450Q180	450H-FK	182/184TC	10.88	9.00	0.56	11.50	5.44	6.88	5.34	7.97	13.10	6.42	13.16
4.50	450Q210	450H-FK	213/215TC	10.88	9.00	0.56	14.00	5.44	6.88	5.34	7.97	13.10	6.42	13.16
5.16	516Q180	516H-FK	182/184TC	12.50	10.00	0.69	14.00	6.25	6.58	6.57	8.78	15.33	7.42	13.91
5.16	516Q210	516H-FK	213/215TC	12.50	10.00	0.69	14.00	6.25	6.58	6.57	8.78	15.33	7.42	13.91
6.00	600Q180	600H-FK	182/184TC	14.50	12.00	0.69	15.56	7.25	7.22	7.85	9.68	18.22	8.25	15.31
6.00	600Q210	600H-FK	213/215TC	14.50	12.00	0.69	15.56	7.25	7.22	7.85	9.68	18.22	8.25	15.31

C.D .	N.E.M.A. Frame	N	R	INPUT		OUTPUT SHAFT				Stock Ratios marked "x "								
						U	V	WKey										
				Bore	Keyway			Sq.	Lgth.	5	10	15	20	25	30	40	50	60
1.33	56C	4.00	3.25	0.63	3/16 X 3/32	0.63	1.94	0.19	1.50	x	x	x	x	x	x	x	x	x
1.54	56C	4.31	3.25	0.63	3/16 X 3/32	0.75	1.90	0.19	1.25	x	x	x	x	x	x	x	x	x
1.54	143/145TC	4.31	3.25	0.88	3/16 X 3/32	0.75	1.90	0.19	1.25	x	x	x	-	-	-	-	-	-
1.75	56C	4.31	3.25	0.63	3/16 X 3/32	0.63	1.84	0.19	1.38	x	x	x	x	x	x	x	x	x
1.75	143/145TC	4.31	3.25	0.88	3/16 X 3/32	0.88	1.84	0.19	1.38	x	x	x	-	-	-	-	-	-
2.06	56C	4.68	3.25	0.63	3/16 X 3/32	0.63	2.08	0.25	1.44	x	x	x	x	x	x	x	x	x
2.06	143/145TC	4.68	3.25	0.88	3/16 X 3/32	0.88	2.08	0.25	1.44	x	x	x	x	x	-	-	-	-
2.37	56C	5.14	3.25	0.63	3/16 X 3/32	0.63	2.44	0.25	1.75	x	x	x	x	x	x	x	x	x
2.37	143/145TC	5.14	3.25	0.88	3/16 X 3/32	0.88	2.44	0.25	1.75	x	x	x	x	x	x	x	-	-
2.62	56C	5.63	3.25	0.63	3/16 X 3/32	0.63	2.52	0.25	1.75	-	x	x	x	x	x	x	x	x
2.62	143/145TC	5.63	3.25	0.88	3/16 X 3/32	0.88	2.52	0.25	1.75	-	x	x	x	x	x	x	x	x
2.62	182/184TC	5.63	4.50	1.13	1/4 X 1/8	1.13	2.52	0.25	1.75	x	x	-	-	-	-	-	-	-
3.00	56C	6.75	3.25	0.63	3/16 X 3/32	1.25	3.36	0.25	2.25	-	-	x	x	x	x	x	x	x
3.00	143/145TC	6.75	3.25	0.88	3/16 X 3/32	1.25	3.36	0.25	2.25	-	x	x	x	x	x	x	x	x
3.00	182/184TC	6.75	4.50	1.13	1/4 X 1/8	1.25	3.36	0.25	2.25	-	x	x	x	x	x	x	x	x
3.25	56C	7.06	3.25	0.63	3/16 X 3/32	1.38	3.42	0.31	2.88	-	x	x	x	x	x	x	x	x
3.25	143/145TC	7.06	3.25	0.88	3/16 X 3/32	1.38	3.42	0.31	2.88	-	x	x	x	x	x	x	x	x
3.25	182/184TC	7.06	4.50	1.13	1/4 X 1/8	1.38	3.42	0.31	2.88	-	x	x	x	x	x	x	x	x
3.75	56C	7.75	3.38	0.63	3/16 X 3/32	1.63	3.50	0.38	2.81	-	-	-	-	-	-	x	x	x
3.75	143/145TC	7.75	3.38	0.88	3/16 X 3/32	1.63	3.50	0.38	2.81	-	x	x	x	x	x	x	x	x
3.75	182/184TC	7.75	4.50	1.13	1/4 X 1/8	1.63	3.50	0.38	2.81	-	x	x	x	x	x	x	x	-
3.75	213/215TC	7.75	4.50	1.38	5/16 X 5/32	1.63	3.50	0.38	2.81	-	x	x	-	-	-	-	-	-
4.50	143/145TC	8.44	3.38	0.88	3/16 X 3/32	1.63	3.38	0.38	2.50	-	-	-	-	-	-	x	x	x
4.50	182/184TC	8.44	4.50	1.13	1/4 X 1/8	1.63	3.38	0.38	2.50	-	-	x	x	x	x	x	x	x
4.50	213/215TC	8.44	4.50	1.38	5/16 X 5/32	1.63	3.38	0.38	2.50	-	x	x	x	x	-	-	-	-
5.16	182/184TC	9.06	4.50	1.13	1/4 X 1/8	2.00	4.16	0.50	2.81	-	-	-	-	-	-	x	x	x
5.16	213/215TC	9.06	4.50	1.38	5/16 X 5/32	2.00	4.16	0.50	2.81	-	x	x	x	x	x	-	-	-
6.00	182/184TC	10.00	4.50	1.13	5/16 X 5/32	2.25	4.56	0.50	3.50	-	-	-	x	x	x	x	x	x
6.00	213/215TC	10.00	4.50	1.38	5/16 X 5/32	2.25	4.56	0.50	3.50	-	-	-	-	x	x	x	x	x

Fan Kit

Ref. No.	Fan Kit	AA		L	Wt. Lbs.
		Tap	Deep		
375Q	375 FAN	3/8-24	3/4	7.66	2.8
450Q	450 FAN	3/8-24	3/4	8.36	2.8
516Q	516 FAN	3/8-24	3/4	9.18	2.8
600Q	600 FAN	3/8-24	3/4	10.70	4.2

★ To complete Part No. add shaft assembly (L, R, LR) and ratio symbol to size - for example 133Q56H10.

◆ Components needed to make assembled reducer must be ordered separately. If Fan Kit is required, see the table at the left.
Consult factory for ratios not shown as standard.
Flange Kits shown on page C-65.

Style QRT

C-Face Quilled - Riser Block
Worm Top

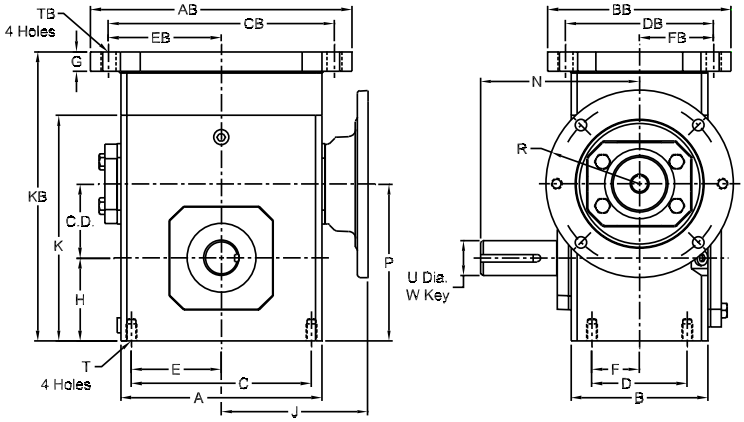

Assembly Drawing and Sample of Components



133Q56L10
133R-BK
133S-BK



133Q56R10
133R-BK
133S-BK

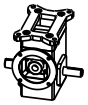

133Q56LR10
133R-BK
133S-BK



DIMENSIONS (INCHES) FOR STYLE "QRT" - C-FACE QUILLED- RISER BLOCK WORM TOP

C.D.	BASIC UNIT ★	N.E.M.A. FRAME	A	B	C	D	E	F	H	J	N	P	R
1.33	**133Q56**	56C	4.00	2.88	3.25	2.00	1.63	1.00	1.82	3.94	4.00	3.05	3.25
1.54	**154Q56**	56C	4.88	3.44	4.19	2.75	2.09	1.38	1.91	3.99	4.31	3.45	3.25
1.54	**154Q140**	143/145TC	4.88	3.44	4.19	2.75	2.09	1.38	1.91	3.99	4.31	3.45	3.25
1.75	**175Q56**	56C	5.06	3.56	4.19	2.75	2.09	1.38	2.06	4.09	4.31	3.81	3.25
1.75	**175Q140**	143/145TC	5.06	3.56	4.19	2.75	2.09	1.38	2.06	4.09	4.31	3.81	3.25
2.06	**206Q56**	56C	5.80	3.81	5.00	2.88	2.50	1.44	2.29	4.46	4.68	4.35	3.25
2.06	**206Q140**	143/145TC	5.80	3.81	5.00	2.88	2.50	1.44	2.29	4.46	4.68	4.35	3.25
2.37	**237Q56**	56C	6.12	4.06	5.00	2.88	2.50	1.44	2.50	4.63	5.14	4.88	3.25
2.37	**237Q140**	143/145TC	6.12	4.06	5.00	2.88	2.50	1.44	2.50	4.63	5.14	4.88	3.25
2.62	**262Q56**	56C	7.12	4.84	6.38	3.38	3.19	1.69	2.93	5.19	5.63	5.56	3.25
2.62	**262Q140**	143/145TC	7.12	4.84	6.38	3.38	3.19	1.69	2.93	5.19	5.63	5.56	3.25
2.62	**262Q180**	182/184TC	7.12	4.84	6.38	3.38	3.19	1.69	2.93	5.62	5.63	5.56	4.50
3.00	**300Q56**	56C	8.12	5.25	7.00	4.00	3.50	2.00	3.25	5.95	6.75	6.25	3.25
3.00	**300Q140**	143/145TC	8.12	5.25	7.00	4.00	3.50	2.00	3.25	5.95	6.75	6.25	3.25
3.00	**300Q180**	182/184TC	8.12	5.25	7.00	4.00	3.50	2.00	3.25	6.15	6.75	6.25	4.50
3.25	**325Q56**	56C	8.50	5.75	7.50	4.00	3.75	2.00	3.50	6.14	7.06	6.75	3.25
3.25	**325Q140**	143/145TC	8.50	5.75	7.50	4.00	3.75	2.00	3.50	6.14	7.06	6.75	3.25
3.25	**325Q180**	182/184TC	8.50	5.75	7.50	4.00	3.75	2.00	3.50	6.34	7.06	6.75	4.50
3.75	**375Q56**	56C	9.50	6.38	8.50	4.75	4.25	2.38	3.88	6.01	7.75	7.63	3.38
3.75	**375Q140**	143/145TC	9.50	6.38	8.50	4.75	4.25	2.38	3.88	6.01	7.75	7.63	3.38
3.75	**375Q180**	182/184TC	9.50	6.38	8.50	4.75	4.25	2.38	3.88	7.29	7.75	7.63	4.50
3.75	**375Q210**	213/215TC	9.50	6.38	8.50	4.75	4.25	2.38	3.88	7.29	7.75	7.63	4.50
4.50	**450Q140**	143/145TC	10.88	7.38	9.56	5.81	4.78	2.91	4.50	6.69	8.44	9.00	3.38
4.50	**450Q180**	182/184TC	10.88	7.38	9.56	5.81	4.78	2.91	4.50	7.97	8.44	9.00	4.50
4.50	**450Q210**	213/215TC	10.88	7.38	9.56	5.81	4.78	2.91	4.50	7.97	8.44	9.00	4.50
5.16	**516Q180**	182/184TC	12.50	7.38	11.00	5.81	5.50	2.91	5.31	8.78	9.06	10.47	4.50
5.16	**516Q210**	213/215TC	12.50	7.38	11.00	5.81	5.50	2.91	5.31	8.78	9.06	10.47	4.50

C.D.	N.E.M.A. FRAME	T		OUTPUT SHAFT			STOCK RATIOS MARKED "X"								
				U	W KEY										
		SIZE	DEEP		SQ.	LGTH.	5	10	15	20	25	30	40	50	60
1.33	56C	5/16-18	0.50	0.625	0.188	1.31	x	x	x	x	x	x	x	x	x
1.54	56C	5/16-18	0.63	0.750	0.188	1.50	x	x	x	x	x	x	x	x	x
1.54	143/145TC	5/16-18	0.63	0.750	0.188	1.50	x	x	x	-	-	-	-	-	-
1.75	56C	5/16-18	0.63	0.875	0.188	1.38	x	x	x	x	x	x	x	x	x
1.75	143/145TC	5/16-18	0.63	0.875	0.188	1.38	x	x	x	-	-	-	-	-	-
2.06	56C	3/8-16	0.63	1.000	0.250	1.44	x	x	x	x	x	x	x	x	x
2.06	143/145TC	3/8-16	0.63	1.000	0.250	1.44	x	x	x	x	x	x	x	x	x
2.37	56C	3/8-16	0.69	1.125	0.250	1.75	x	x	x	x	x	x	x	x	x
2.37	143/145TC	3/8-16	0.69	1.125	0.250	1.75	x	x	x	x	x	x	x	x	x
2.62	56C	3/8-16	0.69	1.125	0.250	1.75	-	x	x	x	x	x	x	x	x
2.62	143/145TC	3/8-16	0.69	1.125	0.250	1.75	-	x	x	x	x	x	x	x	x
2.62	182/184TC	3/8-16	0.69	1.125	0.250	1.75	x	x	-	-	-	-	-	-	-
3.00	56C	7/16-14	0.88	1.250	0.250	1.75	-	-	x	x	x	x	x	x	x
3.00	143/145TC	7/16-14	0.88	1.250	0.250	1.75	-	x	x	x	x	x	x	x	x
3.00	182/184TC	7/16-14	0.88	1.250	0.250	1.75	-	x	x	x	x	x	x	x	x
3.25	56C	7/16-14	0.88	1.375	0.375	2.25	-	x	x	x	x	x	x	x	x
3.25	143/145TC	7/16-14	0.88	1.375	0.375	2.25	-	x	x	x	x	x	x	x	x
3.25	182/184TC	7/16-14	0.88	1.375	0.375	2.25	-	x	x	x	x	x	x	x	x
3.75	56C	1/2-13	1.00	0.625	0.375	2.81	-	-	-	-	-	-	x	x	x
3.75	143/145TC	1/2-13	1.00	0.875	0.375	2.81	-	x	x	x	x	x	x	x	x
3.75	182/184TC	1/2-13	1.00	1.125	0.375	2.81	-	x	x	x	x	x	x	x	-
3.75	213/215TC	1/2-13	1.00	1.375	0.375	2.81	-	x	x	-	-	-	-	-	-
4.50	143/145TC	5/8-11	1.00	0.875	0.375	2.50	-	-	-	-	-	-	x	x	x
4.50	182/184TC	5/8-11	1.00	1.125	0.375	2.50	-	-	x	x	x	x	x	x	x
4.50	213/215TC	5/8-11	1.00	1.375	0.375	2.50	-	x	x	x	x	-	-	-	-
5.16	182/184TC	5/8-11	1.00	1.125	0.500	2.81	-	-	-	-	-	-	x	x	x
5.16	213/215TC	5/8-11	1.00	1.375	0.500	2.81	-	x	x	x	x	x	-	-	-

DIMENSIONS (INCHES) FOR STYLE "QT" - WORM TOP

COMPONENTS ♦		AB	BB	CB	DB	EB	FB	G	KB	TB
REF. NO.	RISER BLOCK KIT									
133Q	**133R-BK**	5.38	4.19	4.38	3.31	2.19	1.66	0.47	7.02	0.38
154Q	**154R-BK**	6.50	5.56	5.25	4.31	2.63	2.16	0.59	7.97	0.41
175Q	**175R-BK**	6.99	5.75	5.75	4.50	2.88	2.25	0.69	8.44	0.41
206Q	**206R-BK**	7.69	6.00	6.38	4.69	3.19	2.34	0.72	9.10	0.47
237Q	**237R-BK**	8.37	6.19	7.06	4.88	3.53	2.44	0.75	9.69	0.49
262Q	**262R-BK**	9.25	6.50	8.00	5.25	4.00	2.63	0.75	10.25	0.53
300Q	**300R-BK**	10.00	7.50	8.44	5.88	4.22	2.94	0.75	11.76	0.53
325Q	**325R-BK**	11.12	7.75	9.50	6.13	4.75	3.06	0.81	12.39	0.53
375Q	**375R-BK**	12.00	8.63	10.38	7.00	5.19	3.50	0.94	13.15	0.59
450Q	**450R-BK**	13.88	9.31	12.13	7.63	6.06	3.81	1.13	15.33	0.66
516Q	**516R-BK**	16.38	10.38	14.13	8.38	7.06	4.19	1.13	16.88	0.78

★ To complete Part No. add shaft assembly (L, R, LR) and ratio symbol to size - for example 133Q56H10.
♦ Components needed to make assembled reducer must be ordered separately. If Fan Kit is required, see the table above.
Consult factory for ratios not shown as standard.
Riser Block Kits available on page C-67.

Style UH

Hollow – Basic Unit

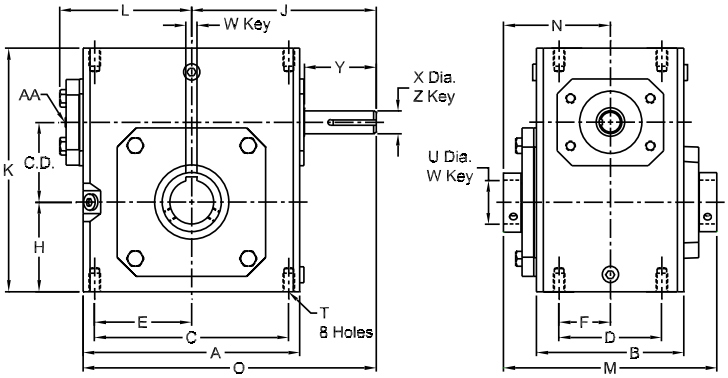

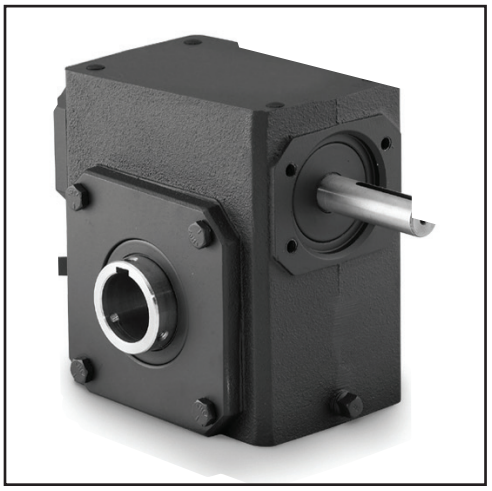

Style UHT

Torque Arm

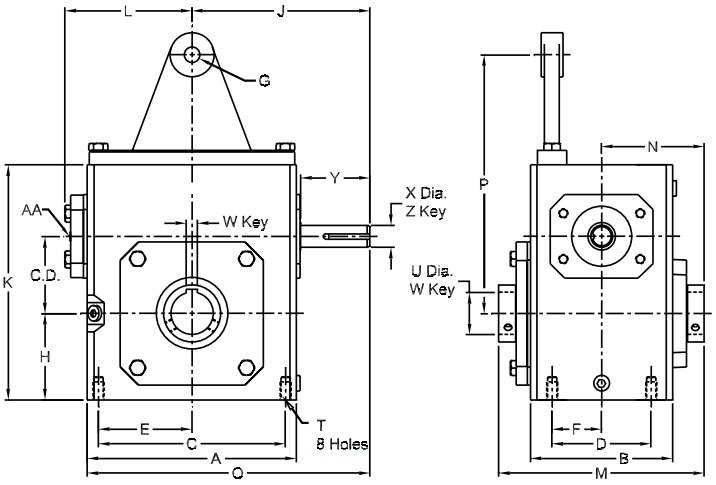

Assembly Drawing and Sample of Components



133UH10
133H-TAK

133UH10
133H-TAK

133UH10
133H-TAK

133UH10
133H-TAK

Style UHF

Flange Bracket

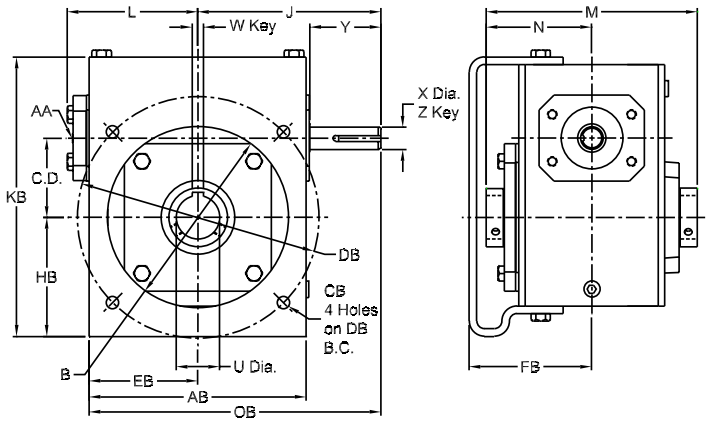

Assembly Drawing and Sample of Components



133UH10
133H-FK

Dimensions (Inches) for Style "UH"

C.D .	Basic Unit★	A	B	C	D	E	F	H	J	K	L	M	N	O
1.33	133UH	3.80	2.82	3.25	2.00	1.63	1.00	1.72	3.82	4.66	2.61	4.75	2.38	5.72
1.54	154UH	5.19	3.44	4.19	2.75	2.09	1.38	1.91	4.35	5.38	3.14	5.42	2.71	6.79
1.75	175UH	5.19	3.56	4.19	2.75	2.09	1.38	2.06	4.45	5.75	3.24	5.50	2.75	6.98
2.06	206UH	5.80	3.81	5.00	2.88	2.50	1.44	2.28	4.82	6.38	3.61	6.00	3.00	7.72
2.37	237UH	6.12	4.06	5.00	2.88	2.50	1.44	2.50	5.51	6.94	3.77	6.00	3.00	8.57
2.62	262UH	7.38	4.84	6.38	3.38	3.19	1.69	2.94	6.07	8.00	4.34	7.00	3.50	9.63
3.00	300UH	8.12	5.25	7.00	4.00	3.50	2.00	3.25	6.57	8.88	4.84	7.50	3.75	10.63
3.25	325UH	8.75	5.75	7.50	4.00	3.75	2.00	3.50	6.76	9.38	5.02	7.88	3.94	11.01
3.75	375UH	9.50	6.38	8.50	4.75	4.25	2.38	3.88	8.38	10.44	5.74	9.63	4.81	13.13
4.50	450UH	10.88	7.38	9.56	5.81	4.78	2.91	4.50	9.59	11.94	6.42	11.13	5.56	15.09
5.16	516UH	12.50	7.38	11.00	5.81	5.50	2.91	5.31	10.69	13.75	7.42	11.31	5.66	16.94
6.00	600UH	14.50	8.13	12.75	6.38	6.38	3.19	6.50	11.75	16.50	8.25	12.63	6.31	19.00

C.D .	T		OUTPUT BORE ✚		INPUT SHAFT				Stock Ratios marked "x "											
	Size	Deep	U	W Keyway	X	Y	ZKey Sq.	Lgth.	5	7.5	10	15	20	25	30	40	50	60	80	100
1.33	5/16-18	0.50	0.63	See Keyway Dimensions on page C-63.	0.50	1.76	0.13	1.00	x	x	x	x	x	x	x	x	x	x	x	x
1.54	5/16-18	0.63	0.63		0.63	1.76	0.19	1.38	x	x	x	x	x	x	x	x	x	x	x	x
1.75	5/16-18	0.63	1.00		0.63	1.76	0.19	1.38	x	x	x	x	x	x	x	x	x	x	x	x
2.06	5/16-18	0.63	1.50		0.63	1.76	0.19	1.38	x	x	x	x	x	x	x	x	x	x	x	x
2.37	3/8-16	0.69	1.50		0.75	2.38	0.19	1.63	x	x	x	x	x	x	x	x	x	x	x	x
2.62	3/8-16	0.69	1.94		0.75	2.38	0.19	1.63	x	x	x	x	x	x	x	x	x	x	x	x
3.00	7/16-14	0.88	2.19		0.88	2.38	0.19	1.63	x	x	x	x	x	x	x	x	x	x	x	x
3.25	7/16-14	0.88	2.19		0.88	2.38	0.19	1.63	x	x	x	x	x	x	x	x	x	x	x	x
3.75	1/2-13	1.00	2.44	5/8 x 3/16	1.00	2.91	0.25	1.75	-	-	x	x	x	x	x	x	x	x	-	-
4.50	5/8-11	1.00	2.94	3/4 x 1/4	1.13	3.48	0.25	2.50	-	-	x	x	x	x	x	x	x	x	-	-
5.16	5/8-11	1.00	3.44	7/8 x 1/4	1.25	3.75	0.25	2.56	-	-	x	x	x	x	x	x	x	x	-	-
6.00	5/8-11	1.00	3.94	1 x 1/4	1.50	3.75	0.38	2.94	x	-	x	x	x	x	x	x	x	x	-	-

Dimensions (Inches) for Style "UHT" - With Torque Arm

Components ◆		G	P
Basic Unit ★	Torque Arm Kit		
133U H	133H-TAK	0.53	4.19
154U H	154H-TAK	0.53	5.97
175U H	175H-TAK	0.53	6.19
206U H	206H-TAK	0.53	7.24
237U H	237H-TAK	0.53	7.69
262U H	262H-TAK	0.53	8.81
300U H	300H-TAK	0.53	10.63
325U H	325H-TAK	0.53	10.88
375U H	375H-TAK	0.53	9.56
450U H	450H-TAK	0.81	10.94
516U H	516H-TAK	0.81	12.45
600U H	600H-TAK	0.81	14.63

Fan Kit

Ref. No.	Fan Kit	AA		L	Wt. Lbs.
		Tap	Deep		
375UH	375 FAN	3/8-24	3/4	7.66	2.8
450UH	450 FAN	3/8-24	3/4	8.36	2.8
516UH	516 FAN	3/8-24	3/4	9.18	2.8
600UH	600 FAN	3/8-24	3/4	10.70	4.2

Dimensions (Inches) for Style "UHF" - With Flange

Components ◆		AB	BB	CB	DB	EB	FB	HB	J	KB	L	M	N	OB
Basic Unit ★	Torque Arm Kit													
133UH	133H-FK	4.25	3.62	0.34	5.00	2.13	3.00	2.42	3.82	5.55	2.61	4.75	2.38	5.95
154UH	154H-FK	4.75	3.63	0.34	5.00	2.38	3.56	2.54	4.69	6.20	2.75	5.42	3.22	7.07
175UH	175H-FK	4.81	4.06	0.34	5.88	2.41	3.50	2.78	4.45	6.66	3.24	5.50	2.75	6.86
206UH	206H-FK	5.75	4.50	0.41	6.50	2.88	3.75	3.18	4.82	7.47	3.61	6.00	3.00	7.70
237UH	237H-FK	6.00	5.00	0.41	7.50	3.00	3.72	3.61	5.51	8.30	3.77	6.00	3.00	8.51
262UH	262H-FK	7.18	6.00	0.41	8.00	3.59	4.06	3.94	6.07	9.25	4.34	7.00	3.50	9.66
300UH	300H-FK	8.50	7.00	0.41	9.00	4.25	4.50	4.14	7.00	10.02	4.50	7.50	4.19	11.25
325UH	325H-FK	8.50	7.00	0.56	10.00	4.25	5.25	4.75	7.06	10.89	4.50	7.88	4.25	11.31
375UH	375H-FK	9.54	8.00	0.56	11.50	4.77	5.46	5.04	8.38	11.85	5.74	9.63	4.81	13.13
450UH	450H-FK	10.88	9.00	0.56	11.50	5.44	6.88	5.34	9.59	13.10	6.42	11.13	5.56	15.09
516UH	516H-FK	12.50	10.00	0.69	14.00	6.25	6.58	6.57	10.69	15.33	7.42	11.31	5.66	16.94
600UH	600H-FK	14.50	12.00	0.69	15.56	7.25	7.22	7.85	11.75	18.22	8.25	12.63	6.31	19.00

✚ Max bore dimension shown. For additional bore sizes, please refer to page C-63.
★ To complete Part No. add ratio symbol to size - for example 133UH10
◆ Components needed to make assembled reducer must be ordered separately. If Fan Kit is required, see the table above.
Torque Arm Kits shown on page C-64.
Flange Kits shown on page C-65.

Style QH

C-Face Quilled–Hollow

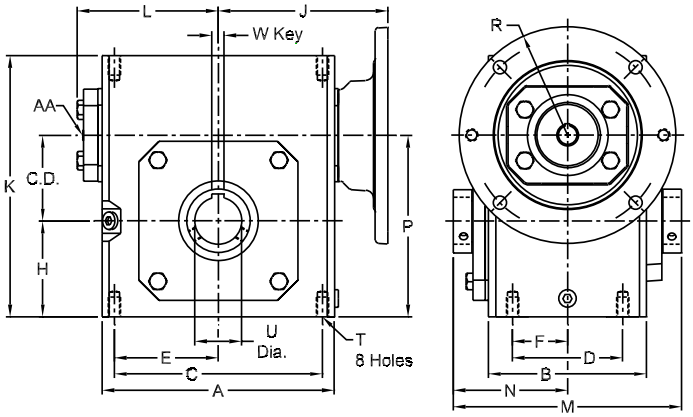

Assembly Drawing and Sample of Components



133Q56H10

Style QHT

Torque Arm

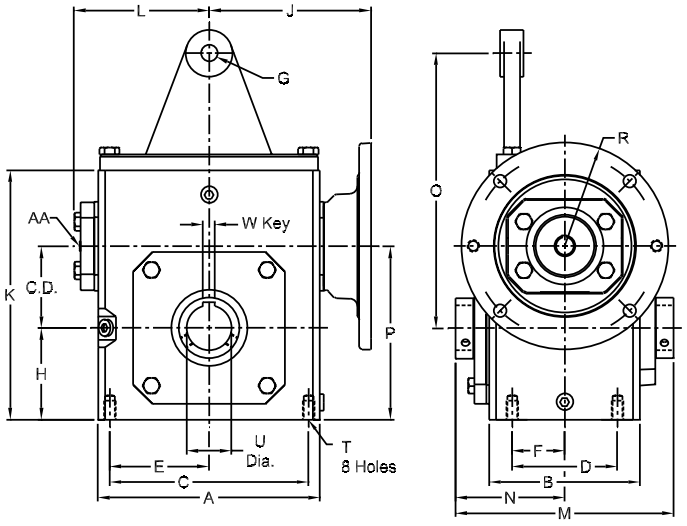

Assembly Drawing and Sample of Components

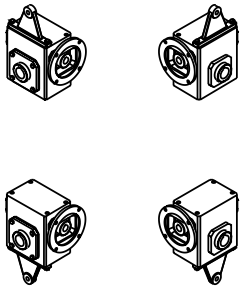

133Q56H10
133H-TAK

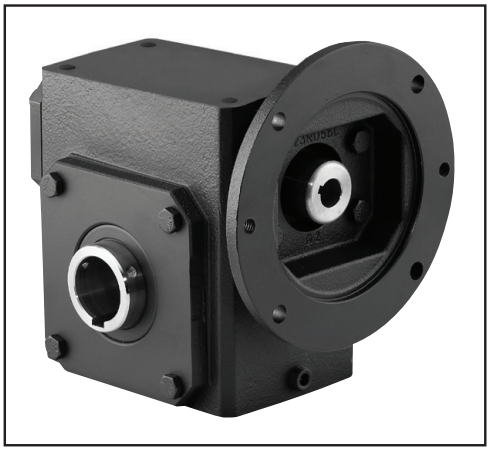

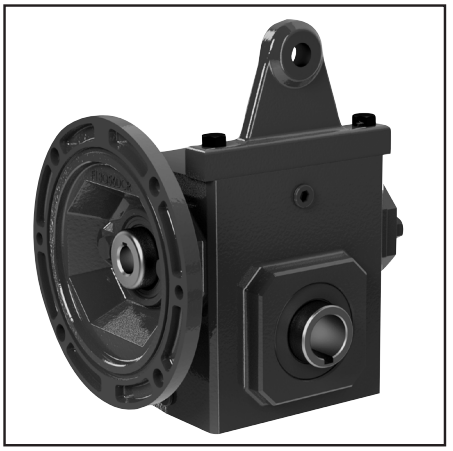

Dimensions (Inches) for Style "QH"

C.D .	Basic Unit ★	N.E.M.A. Frame	A	B	C	D	E	F	H	J	K	L	M	N	P	R
1.33	133Q56H	56C	3.80	2.82	3.25	2.00	1.63	1.00	1.72	3.46	4.66	2.61	4.75	2.38	3.05	3.25
1.54	154Q56H	56C	5.19	3.44	4.19	2.75	2.09	1.38	1.91	3.99	5.38	3.14	5.42	2.71	3.45	3.25
1.54	154Q140H	143/145TC	5.19	3.44	4.19	2.75	2.09	1.38	1.91	3.99	5.38	3.14	5.42	2.71	3.45	3.25
1.75	175Q56H	56C	5.19	3.56	4.19	2.75	2.09	1.38	2.06	4.09	5.75	3.24	5.50	2.75	3.81	3.25
1.75	175Q140H	143/145TC	5.19	3.56	4.19	2.75	2.09	1.38	2.06	4.09	5.75	3.24	5.50	2.75	3.81	3.25
2.06	206Q56H	56C	5.80	3.81	5.00	2.88	2.50	1.44	2.28	4.46	6.38	3.61	6.00	3.00	4.34	3.25
2.06	206Q140H	143/145TC	5.80	3.81	5.00	2.88	2.50	1.44	2.28	4.46	6.38	3.61	6.00	3.00	4.34	3.25
2.37	237Q56H	56C	6.12	4.06	5.00	2.88	2.50	1.44	2.50	4.63	6.94	3.77	6.00	3.00	4.88	3.25
2.37	237Q140H	143/145TC	6.12	4.06	5.00	2.88	2.50	1.44	2.50	4.63	6.94	3.77	6.00	3.00	4.88	3.25
2.62	262Q56H	56C	7.38	4.84	6.38	3.38	3.19	1.69	2.94	5.19	8.00	4.34	7.00	3.50	5.57	3.25
2.62	262Q140H	143/145TC	7.38	4.84	6.38	3.38	3.19	1.69	2.94	5.19	8.00	4.34	7.00	3.50	5.57	3.25
2.62	262Q180H	182/184TC	7.38	4.84	6.38	3.38	3.19	1.69	2.94	5.62	8.00	4.34	7.00	3.50	5.57	4.50
3.00	300Q56H	56C	8.12	5.25	7.00	4.00	3.50	2.00	3.25	5.95	8.88	4.84	7.50	3.75	6.25	3.25
3.00	300Q140H	143/145TC	8.12	5.25	7.00	4.00	3.50	2.00	3.25	5.95	8.88	4.84	7.50	3.75	6.25	3.25
3.00	300Q180H	182/184TC	8.12	5.25	7.00	4.00	3.50	2.00	3.25	6.15	8.88	4.84	7.50	3.75	6.25	4.50
3.25	325Q56H	56C	8.75	5.75	7.50	4.00	3.75	2.00	3.50	6.14	9.38	5.02	7.88	3.94	6.75	3.25
3.25	325Q140H	143/145TC	8.75	5.75	7.50	4.00	3.75	2.00	3.50	6.14	9.38	5.02	7.88	3.94	6.75	3.25
3.25	325Q180H	182/184TC	8.75	5.75	7.50	4.00	3.75	2.00	3.50	6.34	9.38	5.02	7.88	3.94	6.75	4.50
3.75	375Q56H	56C	9.50	6.38	8.50	4.75	4.25	2.38	3.88	6.01	10.44	5.74	9.63	4.81	7.63	3.38
3.75	375Q140H	143/145TC	9.50	6.38	8.50	4.75	4.25	2.38	3.88	6.01	10.44	5.74	9.63	4.81	7.63	3.38
3.75	375Q180H	182/184TC	9.50	6.38	8.50	4.75	4.25	2.38	3.88	7.29	10.44	5.74	9.63	4.81	7.63	4.50
3.75	375Q210H	213/215TC	9.50	6.38	8.50	4.75	4.25	2.38	3.88	7.29	10.44	5.74	9.63	4.81	7.63	4.50
4.50	450Q140H	143/145TC	10.88	7.38	9.56	5.81	4.78	2.91	4.50	6.69	11.94	6.42	11.13	5.56	9.00	3.38
4.50	450Q180H	182/184TC	10.88	7.38	9.56	5.81	4.78	2.91	4.50	7.97	11.94	6.42	11.13	5.56	9.00	4.50
4.50	450Q210H	213/215TC	10.88	7.38	9.56	5.81	4.78	2.91	4.50	7.97	11.94	6.42	11.13	5.56	9.00	4.50
5.16	516Q180H	182/184TC	12.50	7.38	11.00	5.81	5.50	2.91	5.31	8.78	13.75	7.42	11.31	5.66	10.47	4.50
5.16	516Q210H	213/215TC	12.50	7.38	11.00	5.81	5.50	2.91	5.31	8.78	13.75	7.42	11.31	5.66	10.47	4.50
6.00	600Q180H	182/184TC	14.50	8.13	12.75	6.38	6.38	3.19	6.50	9.68	16.50	8.25	12.63	6.31	12.50	4.50
6.00	600Q210H	213/215TC	14.50	8.13	12.75	6.38	6.38	3.19	6.50	9.68	16.50	8.25	12.63	6.31	12.50	4.50

C.D .	N.E.M.A. Frame	T		INPUT		OUTPUT BORE +		Stocked Ratios											
		Size	Deep	Bore	Keyway	U	W Keyway	5	7.5	10	15	20	25	30	40	50	60	80	100
1.33	56C	5/16-18	0.50	0.63	0.19	0.63		x	x	x	x	x	x	x	x	x	x	x	x
1.54	56C	5/16-18	0.63	0.63	0.19	0.63		x	x	x	x	x	x	x	x	x	x	x	x
1.54	143/145TC	5/16-18	0.63	0.88	0.19	0.63		x	x	x	x	x	-	-	-	-	-	-	-
1.75	56C	5/16-18	0.63	0.63	0.19	1.00		x	x	x	x	x	x	x	x	x	x	x	x
1.75	143/145TC	5/16-18	0.63	0.88	0.19	1.00		x	x	x	x	x	x	x	x	x	x	-	-
2.06	56C	5/16-18	0.63	0.63	0.19	1.50		x	x	x	x	x	x	x	x	x	x	x	x
2.06	143/145TC	5/16-18	0.63	0.88	0.19	1.50		x	x	x	x	x	x	x	x	x	x	-	-
2.37	56C	3/8-16	0.69	0.63	0.19	1.50	See Keyway Dimensions on page C-63.	-	-	-	x	x	x	x	x	x	x	x	x
2.37	143/145TC	3/8-16	0.69	0.88	0.19	1.50		x	x	x	x	x	x	x	x	x	x	-	-
2.62	56C	3/8-16	0.69	0.63	0.19	1.94		-	-	-	-	x	x	x	x	x	x	x	x
2.62	143/145TC	3/8-16	0.69	0.88	0.19	1.94		x	x	x	x	x	x	x	x	x	x	x	-
2.62	182/184TC	3/8-16	0.69	1.13	0.25	1.94		x	x	x	x	x	-	-	-	-	-	-	-
3.00	56C	7/16-14	0.88	0.63	0.19	2.19		-	-	-	-	-	-	-	x	x	x	x	x
3.00	143/145TC	7/16-14	0.88	0.88	0.19	2.19		-	-	x	x	x	x	x	x	x	x	x	x
3.00	182/184TC	7/16-14	0.88	1.13	0.25	2.19		x	x	x	x	x	x	x	-	-	-	-	-
3.25	56C	7/16-14	0.88	0.63	0.19	2.19		-	-	-	-	-	-	-	x	x	x	x	x
3.25	143/145TC	7/16-14	0.88	0.88	0.19	2.19		-	-	x	x	x	x	x	x	x	x	x	x
3.25	182/184TC	7/16-14	0.88	1.13	0.25	2.19		x	x	x	x	x	x	x	-	-	-	-	-
3.75	56C	1/2-13	1.00	0.63	0.19	2.44	5/8 x 3/16	-	-	-	-	-	-	-	x	x	x	-	-
3.75	143/145TC	1/2-13	1.00	0.88	0.19	2.44	5/8 x 3/16	-	-	x	x	x	x	x	x	x	x	-	-
3.75	182/184TC	1/2-13	1.00	1.13	0.25	2.44	5/8 x 3/16	-	-	x	x	x	x	x	x	x	-	-	-
3.75	213/215TC	1/2-13	1.00	1.38	0.31	2.44	5/8 x 3/16	-	-	x	x	-	-	-	-	-	-	-	-
4.50	143/145TC	5/8-11	1.00	0.88	0.19	2.94	3/4 x 1/4	-	-	-	-	-	-	-	x	x	x	-	-
4.50	182/184TC	5/8-11	1.00	1.13	0.25	2.94	3/4 x 1/4	-	-	-	x	x	x	x	x	x	x	-	-
4.50	213/215TC	5/8-11	1.00	1.38	0.31	2.94	3/4 x 1/4	-	-	x	x	x	x	-	-	-	-	-	-
5.16	182/184TC	5/8-11	1.00	1.13	0.25	3.44	7/8 x 1/4	-	-	-	-	-	-	-	x	x	x	-	-
5.16	213/215TC	5/8-11	1.00	1.38	0.31	3.44	7/8 x 1/4	-	-	x	x	x	x	x	-	-	-	-	-
6.00	182/184TC	5/8-11	1.00	1.13	0.25	3.94	1 x 1/4	-	-	-	-	x	x	x	x	x	x	-	-
6.00	213/215TC	5/8-11	1.00	1.38	0.31	3.94	1 x 1/4	-	-	-	-	-	x	x	x	x	x	-	-

Dimensions (Inches) for Style "QHT"

Components ◆		G	O
Basic Unit ★	Torque Arm Kit		
133U H	133H-TAK	0.53	4.19
154U H	154H-TAK	0.53	5.97
175U H	175H-TAK	0.53	6.19
206U H	206H-TAK	0.53	7.24
237U H	237H-TAK	0.53	7.69
262U H	262H-TAK	0.53	8.81
300U H	300H-TAK	0.53	10.63
325U H	325H-TAK	0.53	10.88
375U H	375H-TAK	0.53	9.56
450U H	450H-TAK	0.81	10.94
516U H	516H-TAK	0.81	12.45
600U H	600H-TAK	0.81	14.63

Fan Kit

Ref. No.	Fan Kit	AA		L	Wt. Lbs.
		Tap	Deep		
375QH	375 FAN	3/8-24	3/4	7.66	2.8
450QH	450 FAN	3/8-24	3/4	8.36	2.8
516QH	516 FAN	3/8-24	3/4	9.18	2.8
600QH	600 FAN	3/8-24	3/4	10.70	4.2

✚ Max bore dimension shown. For additional bore sizes, please refer to page C-63.
★ To complete Part No. add ratio symbol to size - for example 133Q56H10
◆ Components needed to make assembled reducer must be ordered separately. If Fan Kit is required, see the table above.
Torque Arm Kits shown on page C-64.

Style QHF

Flange Bracket

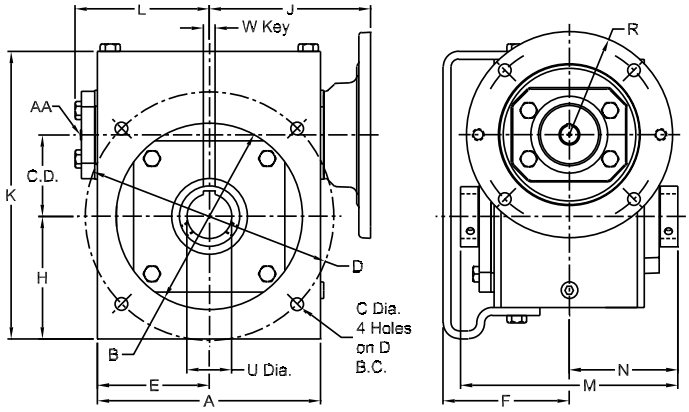

Assembly Drawing and Sample of Components



133Q56H10
133H-FK



Dimensions (Inches) for Style "QHF" - With Flange

C.D.	Components ◆			A	B	C	D	E	F	H	J	K	L	M
	Basic Unit ★	NEMA. FrameA	Flange Kit											
1.33	133Q56H	56C	133H-FK	4.25	3.62	0.34	5.00	2.13	3.00	2.42	3.46	5.55	2.61	4.75
1.54	154Q56H	56C	154H-FK	4.75	3.63	0.34	5.00	2.38	3.56	2.54	4.52	6.20	2.75	6.44
1.54	154Q140H	143/145TC	154H-FK	4.75	3.63	0.34	5.00	2.38	3.56	2.54	4.52	6.20	2.75	6.44
1.75	175Q56H	56C	175H-FK	4.81	4.06	0.34	5.88	2.41	3.50	2.78	4.09	6.66	3.24	5.50
1.75	175Q140H	143/145TC	175H-FK	4.81	4.06	0.34	5.88	2.41	3.50	2.78	4.09	6.66	3.24	5.50
2.06	206Q56H	56C	206H-FK	5.75	4.50	0.41	6.50	2.88	3.75	3.18	4.46	7.47	3.61	6.00
2.06	206Q140H	143/145TC	206H-FK	5.75	4.50	0.41	6.50	2.88	3.75	3.18	4.46	7.47	3.61	6.00
2.37	237Q56H	56C	237H-FK	6.00	5.00	0.41	7.50	3.00	3.72	3.61	4.63	8.30	3.77	6.00
2.37	237Q140H	143/145TC	237H-FK	6.00	5.00	0.41	7.50	3.00	3.72	3.61	4.63	8.30	3.77	6.00
2.62	262Q56H	56C	262H-FK	7.18	6.00	0.41	8.00	3.59	4.06	3.94	5.19	9.25	4.34	7.00
2.62	262Q140H	143/145TC	262H-FK	7.18	6.00	0.41	8.00	3.59	4.06	3.94	5.19	9.25	4.34	7.00
2.62	262Q180H	182/184TC	262H-FK	7.18	6.00	0.41	8.00	3.59	4.06	3.94	5.62	9.25	4.34	7.00
3.00	300Q56H	56C	300H-FK	8.50	7.00	0.41	9.00	4.25	4.50	4.14	5.67	10.02	4.50	7.50
3.00	300Q140H	143/145TC	300H-FK	8.50	7.00	0.41	9.00	4.25	4.50	4.14	5.67	10.02	4.50	7.50
3.00	300Q180H	182/184TC	300H-FK	8.50	7.00	0.41	9.00	4.25	4.50	4.14	6.45	10.02	4.50	7.50
3.25	325Q56H	56C	325H-FK	8.50	7.00	0.56	10.00	4.25	5.25	4.75	6.56	10.89	4.50	7.88
3.25	325Q140H	143/145TC	325H-FK	8.50	7.00	0.56	10.00	4.25	5.25	4.75	6.56	10.89	4.50	7.88
3.25	325Q180H	182/184TC	325H-FK	8.50	7.00	0.56	10.00	4.25	5.25	4.75	7.00	10.89	4.50	7.88
3.75	375Q56H	56C	375H-FK	9.54	8.00	0.56	11.50	4.77	5.46	5.04	6.01	11.85	4.93	9.63
3.75	375Q140H	143/145TC	375H-FK	9.54	8.00	0.56	11.50	4.77	5.46	5.04	6.01	11.85	4.93	9.63
3.75	375Q180H	182/184TC	375H-FK	9.54	8.00	0.56	11.50	4.77	5.46	5.04	7.29	11.85	4.93	9.63
3.75	375Q210H	213/215TC	375H-FK	9.54	8.00	0.56	11.50	4.77	5.46	5.04	7.29	11.85	4.93	9.63
4.50	450Q140H	143/145TC	450H-FK	10.88	9.00	0.56	11.50	5.44	6.88	5.34	6.69	13.10	6.42	11.13
4.50	450Q180H	182/184TC	450H-FK	10.88	9.00	0.56	11.50	5.44	6.88	5.34	7.97	13.10	6.42	11.13
4.50	450Q210H	213/215TC	450H-FK	10.88	9.00	0.56	11.50	5.44	6.88	5.34	7.97	13.10	6.42	11.13
5.16	516Q180H	182/184TC	516H-FK	12.50	10.00	0.69	14.00	6.25	6.58	6.57	8.78	15.33	7.42	11.31
5.16	516Q210H	213/215TC	516H-FK	12.50	10.00	0.69	14.00	6.25	6.58	6.57	8.78	15.33	7.42	11.31
6.00	600Q180H	182/184TC	600H-FK	14.50	12.00	0.69	15.56	7.25	7.22	7.85	9.68	18.22	8.25	12.63
6.00	600Q210H	213/215TC	600H-FK	14.50	12.00	0.69	15.56	7.25	7.22	7.85	9.68	18.22	8.25	12.63

C.D.	NEMA Frame	N	R	INPUT		OUTPUT BORE ✚		Stocked Ratios											
				Bore	Keyway	U	W Keyway	5	7.5	10	15	20	25	30	40	50	60	80	100
1.33	56C	2.38	3.25	0.63	3/16 X 3/32	0.63		x	x	x	x	x	x	x	x	x	x	x	x
1.54	56C	3.22	3.25	0.63	3/16 X 3/32	1.00		x	x	x	x	x	x	x	x	x	x	x	x
1.54	143/145TC	3.22	3.25	0.88	3/16 X 3/33	1.00		x	x	x	x	x	-	-	-	-	-	-	-
1.75	56C	2.75	3.25	0.63	3/16 X 3/32	1.00		x	x	x	x	x	x	x	x	x	x	x	x
1.75	143/145TC	2.75	3.25	0.88	3/16 X 3/32	1.00		x	x	x	x	x	x	x	x	x	x	-	-
2.06	56C	3.00	3.25	0.63	3/16 X 3/32	1.50		x	x	x	x	x	x	x	x	x	x	x	x
2.06	143/145TC	3.00	3.25	0.88	3/16 X 3/32	1.50		x	x	x	x	x	x	x	x	x	x	-	-
2.37	56C	3.00	3.25	0.63	3/16 X 3/32	1.50	See Keyway Dimensions on page C-63.	-	-	-	x	x	x	x	x	x	x	x	x
2.37	143/145TC	3.00	3.25	0.88	3/16 X 3/32	1.50		x	x	x	x	x	x	x	x	x	x	-	-
2.62	56C	3.50	3.25	0.63	3/16 X 3/32	1.50		-	-	-	-	x	x	x	x	x	x	x	x
2.62	143/145TC	3.50	3.25	0.88	3/16 X 3/32	1.50		x	x	x	x	x	x	x	x	x	x	x	-
2.62	182/184TC	4.50	4.50	1.13	1/4 X 1/8	1.50		x	x	x	x	x	-	-	-	-	-	-	-
3.00	56C	4.19	3.25	0.63	3/16 x 3/32	2.19		-	-	-	-	-	-	-	x	x	x	x	x
3.00	143/145TC	4.19	3.25	0.88	3/16 x 3/32	2.19		-	-	x	x	x	x	x	x	x	x	x	x
3.00	182/184TC	4.19	4.50	1.13	1/4 x 1/8	2.19		x	x	x	x	x	x	x	-	-	-	-	-
3.25	56C	4.25	3.25	0.63	3/16 x 3/32	2.19		-	-	-	-	-	-	x	x	x	x	x	x
3.25	143/145TC	4.25	3.25	0.88	3/16 x 3/32	2.19		-	-	x	x	x	x	x	x	x	x	x	x
3.25	182/184TC	4.25	4.50	1.13	1/4 x 1/8	2.19		x	x	x	x	x	x	x	-	-	-	-	-
3.75	56C	4.81	3.38	0.63	3/16 x 3/32	2.44	5/8 x 3/16	-	-	-	-	-	-	-	x	x	x	-	-
3.75	143/145TC	4.81	3.38	0.88	3/16 x 3/32	2.44	5/8 x 3/16	-	-	x	x	x	x	x	x	x	x	-	-
3.75	182/184TC	4.81	4.50	1.13	1/4 x 1/8	2.44	5/8 x 3/16	-	-	x	x	x	x	x	x	x	-	-	-
3.75	213/215TC	4.81	4.50	1.38	5/16 x 5/32	2.44	5/8 x 3/16	-	-	x	x	-	-	-	-	-	-	-	-
4.50	143/145TC	5.56	3.38	0.88	3/16 x 3/32	2.94	3/4 x 1/4	-	-	-	-	-	-	-	x	x	x	-	-
4.50	182/184TC	5.56	4.50	1.13	1/4 x 1/8	2.94	3/4 x 1/4	-	-	-	x	x	x	x	x	x	x	-	-
4.50	213/215TC	5.56	4.50	1.38	5/16 x 5/32	2.94	3/4 x 1/4	-	-	x	x	x	x	-	-	-	-	-	-
5.16	182/184TC	5.56	4.50	1.13	1/4 x 1/8	3.44	7/8 x 1/4	-	-	-	-	-	-	-	x	x	x	-	-
5.16	213/215TC	5.56	4.50	1.38	5/16 x 5/32	3.44	7/8 x 1/4	-	-	x	x	x	x	x	-	-	-	-	-
6.00	182/184TC	6.31	4.50	1.38	5/16 x 5/32	3.94	1 x 1/4	-	-	-	-	x	x	x	x	x	x	-	-
6.00	213/215TC	6.31	4.50	1.38	5/16 x 5/32	3.94	1 x 1/4	-	-	-	-	-	x	x	x	x	x	-	-

Fan Kit

Ref. No.	Fan Kit	AA		L	Wt. Lbs.
		Tap	Deep		
375QH	375 FAN	3/8-24	3/4	7.66	2.8
450QH	450 FAN	3/8-24	3/4	8.36	2.8
516QH	516 FAN	3/8-24	3/4	9.18	2.8
600QH	600 FAN	3/8-24	3/4	10.70	4.2

✚ Max bore dimension shown. For additional bore sizes, please refer to page C-63.
★ To complete Part No. add ratio symbol to size - for example 133Q56H10.
◆ Components needed to make assembled reducer must be ordered separately. If Fan Kit is required, see the table at the left. Flange Kits shown on page C-65.

Style CHF

Flange Bracket

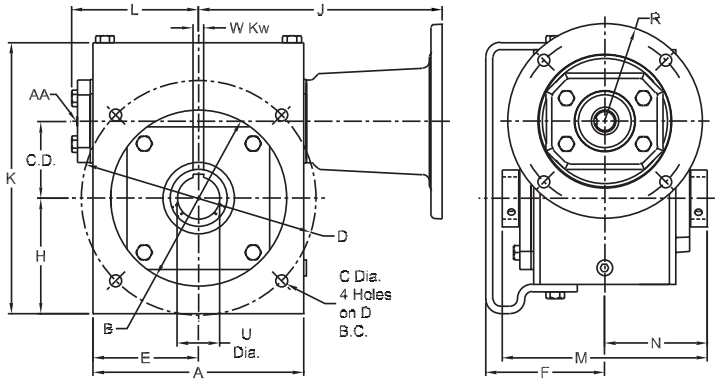

Assembly Drawing and Sample of Components



133UH10
133H-FK
133MAK56

Style CH

C-Face Coupled–Hollow

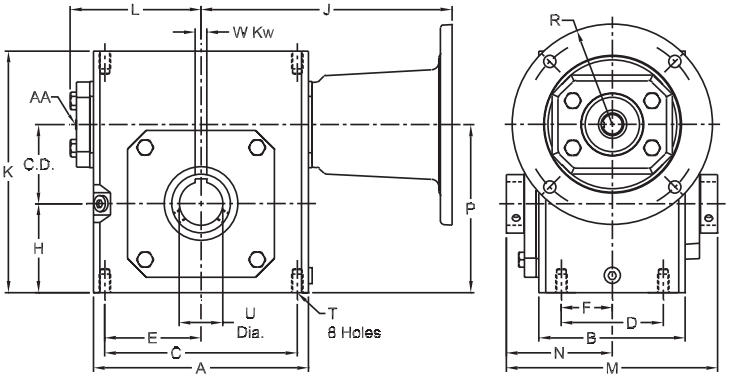

Sample of Components

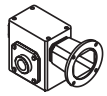

133UH10
133MAK56

Style CHT

Torque Arm

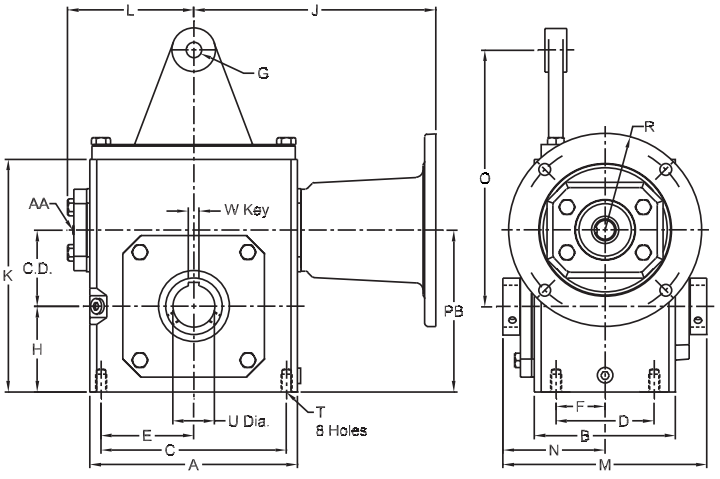

Assembly Drawing and Sample of Components

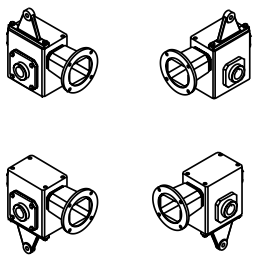

133UH10
133H-TAK
133MAK56

Dimensions (Inches) for Style "CH"

C.D.	Components ◆		A	B	C	D	E	F	H	K	L	M	N	P	T	
	Basic Unit. ★	Adapter Kit													Size	Deep
1.33	133UH	See Adapter Kit Table Below	3.80	2.82	3.25	2.00	1.63	1.00	1.72	4.66	2.61	4.75	2.38	3.05	5/16-18	0.50
1.54	154UH		5.19	3.44	4.19	2.75	2.09	1.38	1.91	5.38	3.14	5.42	2.71	3.45	5/16-18	0.63
1.75	175UH		5.19	3.56	4.19	2.75	2.09	1.38	2.06	5.75	3.24	5.50	2.75	3.81	5/16-18	0.63
2.06	206UH		5.80	3.81	5.00	2.88	2.50	1.44	2.28	6.38	3.61	6.00	3.00	4.34	5/16-18	0.63
2.37	237UH		6.12	4.06	5.00	2.88	2.50	1.44	2.50	6.94	3.77	6.00	3.00	4.87	3/8-16	0.69
2.62	262UH		7.38	4.84	6.38	3.38	3.19	1.69	2.94	8.00	4.34	7.00	3.50	5.56	3/8-16	0.69
3.00	300UH		8.12	5.25	7.00	4.00	3.50	2.00	3.25	8.88	4.84	7.50	3.75	6.25	7/16-14	0.88
3.25	325UH		8.75	5.75	7.50	4.00	3.75	2.00	3.50	9.38	5.02	7.88	3.94	6.75	7/16-14	0.88
3.75	375UH		9.50	6.38	8.50	4.75	4.25	2.38	3.88	10.44	5.74	9.63	4.81	7.63	1/2-13	1.00
4.50	450UH		10.88	7.38	9.56	5.81	4.78	2.91	4.50	11.94	6.42	11.13	5.56	9.00	5/8-11	1.00
5.16	516UH		12.50	7.38	11.00	5.81	5.50	2.91	5.31	13.75	7.42	11.31	5.66	10.47	5/8-11	1.00
6.00	600UH		14.50	8.13	12.75	6.38	6.38	3.19	6.50	16.50	8.25	12.63	6.31	12.50	5/8-11	1.00

C.D .	OUTPUT BORE ✚		Stock Ratios marked "x "											
	U	W Keyway	5	7.5	10	15	20	25	30	40	50	60	80	100
1.33	0.63	See Keyway Dimensions on page C-63.	x	x	x	x	x	x	x	x	x	x	x	x
1.54	0.63		x	x	x	x	x	x	x	x	x	x	x	x
1.75	1.00		x	x	x	x	x	x	x	x	x	x	x	x
2.06	1.50		x	x	x	x	x	x	x	x	x	x	x	x
2.37	1.50		x	x	x	x	x	x	x	x	x	x	x	x
2.62	1.94		x	x	x	x	x	x	x	x	x	x	x	x
3.00	2.19		x	x	x	x	x	x	x	x	x	x	x	x
3.25	2.19		x	x	x	x	x	x	x	x	x	x	x	x
3.75	2.44	5/8 x 3/16	-	-	x	x	x	x	x	x	x	x	-	-
4.50	2.94	3/4 x 1/4	-	-	x	x	x	x	x	x	x	x	-	-
5.16	3.44	7/8 x 1/4	-	-	x	x	x	x	x	x	x	x	-	-
6.00	3.94	1 x 1/4	x	-	x	x	x	x	x	x	x	x	-	-

Dimensions (Inches) for Style "CHT"

Components ◆			G	O
Basic Unit ★	Adapter Kit	Torque Arm Kit		
133UH	See Adapter Kit Table Below	133H-TAK	0.53	4.19
154UH		154H-TAK	0.53	5.97
175UH		175H-TAK	0.53	6.19
206UH		206H-TAK	0.53	7.24
237UH		237H-TAK	0.53	7.69
262UH		262H-TAK	0.53	8.81
300UH		300H-TAK	0.53	10.63
325UH		325H-TAK	0.53	10.88
375UH		375H-TAK	0.53	9.56
450UH		450H-TAK	0.81	10.94
516UH		516H-TAK	0.81	12.45
600UH		600H-TAK	0.81	14.63

Fan Kit

Ref. No.	Fan Kit	AA		L	Wt. Lbs.
		Tap	Deep		
375UH	375 FAN	3/8-24	3/4	7.66	2.8
450UH	450 FAN	3/8-24	3/4	8.36	2.8
516UH	516 FAN	3/8-24	3/4	9.18	2.8
600UH	600 FAN	3/8-24	3/4	10.70	4.2

Dimensions (Inches) for Style "CHF" - With Flange

Component ◆			A	B	C	D	E	F	H	K	L	M	N
Basic Unit ★	Adapter Kit	Torque Arm Kit											
133UH	See Adapter Kit Table Below	133H-FK	4.25	3.62	0.34	5.00	2.13	3.00	2.42	5.55	2.61	4.75	2.38
154UH		154H-FK	4.75	3.63	0.34	5.00	2.38	3.56	2.54	6.20	2.75	5.42	2.71
175UH		175H-FK	4.81	4.06	0.34	5.88	2.41	3.50	2.78	6.66	3.24	5.50	2.75
206UH		206H-FK	5.75	4.50	0.41	6.50	2.88	3.75	3.18	7.47	3.61	6.00	3.00
237UH		237H-FK	6.00	5.00	0.41	7.50	3.00	3.72	3.61	8.30	3.77	6.00	3.00
262UH		262H-FK	7.18	6.00	0.41	8.00	3.59	4.06	3.94	9.25	4.34	7.00	3.50
300UH		300H-FK	8.50	7.00	0.41	9.00	4.25	4.50	4.14	10.02	4.50	7.50	3.75
325UH		325H-FK	8.50	7.00	0.56	10.00	4.25	5.25	4.75	10.89	4.50	7.88	3.94
375UH		375H-FK	9.54	8.00	0.56	11.50	4.77	5.46	5.04	11.85	5.74	9.63	4.81
450UH		450H-FK	10.88	9.00	0.56	11.50	5.44	6.88	5.34	13.10	6.42	11.13	5.56
516UH		516H-FK	12.50	10.00	0.69	14.00	6.25	6.58	6.57	15.33	7.42	11.31	5.66
600UH		600H-FK	14.50	12.00	0.69	15.56	7.25	7.22	7.85	18.22	8.25	12.63	6.31

N.E.M.A. Frame Adapter Kits and Dimensions

C.D .	56C Input: .625 Kw.: 3/16 x 3/32			143/145TC Input: .875 Kw.: 3/16 x 3/32			182/184TC Input: 1.125 KW.: 1/4 x 1/8			213/215TC Input: 1.375 Kw.: 5/16 x 5/32			254/256TC Input: 1.625 Kw.: 3/8 x 3/16		
	Adapter Kit No .	J	R	Adapter Kit No.	J	R	Adapter Kit No.	J	R	Adapter Kit No.	J	R	Adapter Kit No.	J	R
1.33	133MAK56	6.07	3.25	133MAK140	6.07	3.25									
1.54	154MAK56	6.6	3.25	154MAK140	6.6	3.25									
1.75	175MAK56	6.7	3.25	175MAK140	6.7	3.25									
2.06	206MAK56	7.07	3.25	206MAK140	7.07	3.25									
2.37	237MAK56	7.76	3.25	237MAK140	7.76	3.25	237MAK180	8.76	4.5						
2.62	262MAK56	8.32	3.25	262MAK140	8.32	3.25	262MAK180	9.32	4.5						
3.00	300MAK56	8.82	3.25	300MAK140	8.82	3.25	300MAK180	9.82	4.5						
3.25	325MAK56	9.01	3.25	325MAK140	9.01	3.25	325MAK180	10.01	4.5	325MAK210	10.01	4.5			
3.75	375MAK56	11.47	3.38	375MAK140	11.47	3.38	375MAK180	12.92	4.5	375MAK210	12.92	4.5			
4.50				450MAK140	12.15	3.38	450MAK180	13.6	4.5	450MAK210	13.6	4.5			
5.16							516MAK180	14.4	4.5	516MAK210	14.4	4.5			
6.00							600MAK180	16.97	4.5	600MAK210	16.97	4.5	600MAK250	16.97	4.5

✚ Max bore dimension shown. For additional bore sizes, please refer to page C-63.
★ To complete Part No. add ratio symbol to size - for example 133Q56H10.
◆ Components needed to make assembled reducer must be ordered separately. If Fan Kit is required, see the table above.
Motor Adapter Kits Shown on page C-64.
Torque Arm Kits shown on page C-64.
Flange Kits shown on page C-65.

Style UHMT

Worm Top

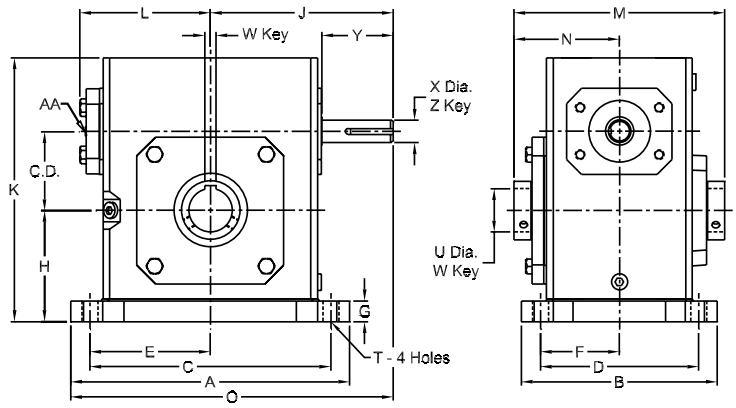

Sample of Components

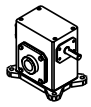

133UH10
133S-BK

Style UHMB

Worm Bottom

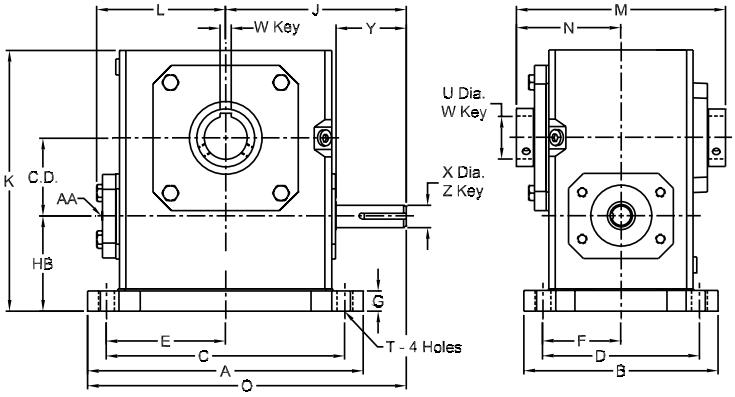

Sample of Components

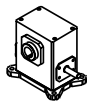

133UH10
133S-BK





Dimensions (Inches) for Style "UHMT" - With Base - Worm Top

C.D.	Components ◆		A	B	C	D	E	F	G	H	J	K	L	M	N
	Basic Unit. ★	Base Kits Standard ▲													
1.33	133UH	133S-BK	5.37	5.38	4.37	3.31	2.19	1.66	0.53	2.25	3.82	5.19	2.61	4.75	2.38
1.54	154UH	154S-BK	6.50	5.56	5.25	4.31	2.63	2.16	0.59	2.50	4.35	5.97	3.14	5.42	2.71
1.75	175UH	175S-BK	6.99	5.75	5.75	4.50	2.88	2.25	0.69	2.75	4.45	6.44	3.24	5.50	2.75
2.06	206UH	206S-BK	7.69	6.00	6.38	4.69	3.19	2.34	0.72	3.00	4.82	7.09	3.61	6.00	3.00
2.37	237UH	237S-BK	8.37	6.19	7.06	4.88	3.53	2.44	0.75	3.25	5.51	7.69	3.77	6.00	3.00
2.62	262UH	262S-BK	9.25	6.50	8.00	5.25	4.00	2.63	0.75	3.69	6.07	8.75	4.34	7.00	3.50
3.00	300UH	300S-BK	10.00	7.50	8.44	5.88	4.22	2.94	0.75	4.00	6.57	9.63	4.84	7.50	3.75
3.25	325UH	325S-BK	11.12	7.75	9.50	6.13	4.75	3.06	0.81	4.38	6.76	10.25	5.02	7.88	3.94
3.75	375UH	375S-BK	12.00	8.63	10.38	7.00	5.19	3.50	0.94	4.81	8.38	11.38	5.74	9.63	4.81
4.50	450UH	450S-BK	13.88	9.31	12.13	7.63	6.06	3.81	1.13	5.69	9.59	13.06	6.42	11.13	5.56
5.16	516UH	516S-BK	16.38	10.38	14.13	8.38	7.06	4.19	1.13	6.44	10.69	14.88	7.42	11.31	5.66
6.00	600UH	600S-BK	19.00	12.00	16.50	9.50	8.25	4.75	1.25	7.75	11.75	17.75	8.25	12.63	6.31

C.D.	O	T		OUTPUT BORE ✚		INPUT SHAFT				Stock Ratios marked "x "											
						X	Y	Z Key													
		Size	Deep	U	W Keyway			Sq.	Lgth	5	7.5	10	15	20	25	30	40	50	60	80	100
1.33	6.51	5/16 - 18	0.50	0.63	See Keyway Dimensions on page C-63.	0.50	1.76	0.13	1.00	x	x	x	x	x	x	x	x	x	x	x	x
1.54	7.60	5/16 - 18	0.63	0.63		0.63	1.76	0.19	1.38	x	x	x	x	x	x	x	x	x	x	x	x
1.75	7.95	5/16 - 18	0.63	1.00		0.63	1.76	0.19	1.38	x	x	x	x	x	x	x	x	x	x	x	x
2.06	8.67	5/16 - 18	0.63	1.50		0.63	1.76	0.19	1.38	x	x	x	x	x	x	x	x	x	x	x	x
2.37	9.70	3/8 - 16	0.69	1.50		0.75	2.38	0.19	1.63	x	x	x	x	x	x	x	x	x	x	x	x
2.62	10.70	3/8 - 16	0.69	1.84		0.75	2.38	0.19	1.63	x	x	x	x	x	x	x	x	x	x	x	x
3.00	11.57	7/16 - 14	0.88	2.19		0.88	2.38	0.19	1.63	x	x	x	x	x	x	x	x	x	x	x	x
3.25	12.32	7/16 - 14	0.88	2.19		0.88	2.38	0.19	1.63	x	x	x	x	x	x	x	x	x	x	x	x
3.75	14.38	1/2 - 13	1.00	2.44	5/8 x 3/16	1.00	2.91	0.25	1.75	-	-	x	x	x	x	x	x	x	x	-	-
4.50	16.53	5/8 - 11	1.00	2.94	3/4 x 1/4	1.13	3.48	0.25	2.50	-	-	x	x	x	x	x	x	x	x	-	-
5.16	18.88	5/8 - 11	1.00	3.44	7/8 x 1/4	1.25	3.75	0.25	2.56	-	-	x	x	x	x	x	x	x	x	-	-
6.00	21.25	5/8 - 11	1.00	3.94	1 x 1/4	1.50	3.75	0.38	2.94	x	-	x	x	x	x	x	x	x	x	-	-

Dimensions (Inches) for Style "UHMB"

Components ◆		HB
Basic Unit. ★	Base Kits Standard ▲	
133UH	133S-BK	2.14
154UH	154S-BK	2.52
175UH	175S-BK	2.63
206UH	206S-BK	2.75
237UH	237S-BK	2.81
262UH	262S-BK	3.19
300UH	300S-BK	3.38
325UH	325S-BK	3.50
375UH	375S-BK	3.75
450UH	450S-BK	4.06
516UH	516S-BK	4.40
600UH	600S-BK	5.25

Fan Kit

Ref. No.	Fan Kit	AA		L	Wt. Lbs.
		Tap	Deep		
375UH	375 FAN	3/8-24	3/4	7.66	2.8
450UH	450 FAN	3/8-24	3/4	8.36	2.8
516UH	516 FAN	3/8-24	3/4	9.18	2.8
600UH	600 FAN	3/8-24	3/4	10.70	4.2

★ To complete Part No. add ratio symbol to size - for example 133Q56H10.
◆ Components needed to make assembled reducer must be ordered separately. If Fan Kit is required, see the table above.
▲ Standard Base Kit (S-BK) base kits are shown on page C-65.
✚ Max bore dimension shown. For additional bore sizes, please refer to page C-63.

Style QHMT

Worm Top

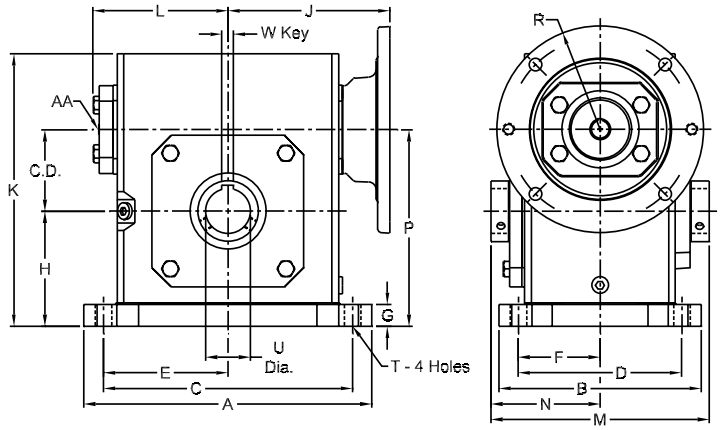

Sample of Components

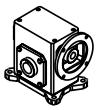

133Q56H10
133S-BK

Style QHMB

Worm Bottom

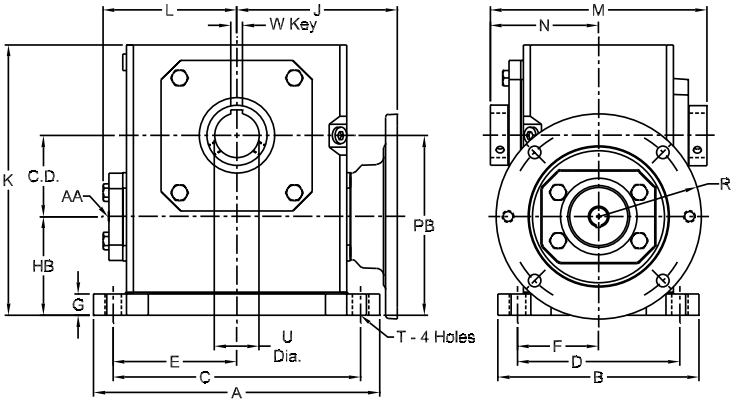

Sample of Components

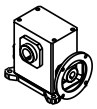

133Q56H10
133S-BK

Note: When mounting Style "QHMB", interference may occur; use a Riser Block or consult Application Engineering (1 800 626 2093).

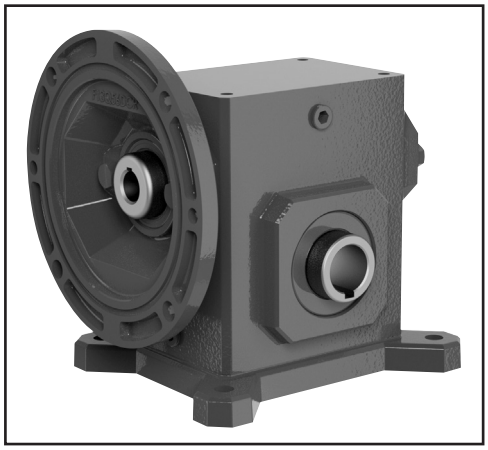

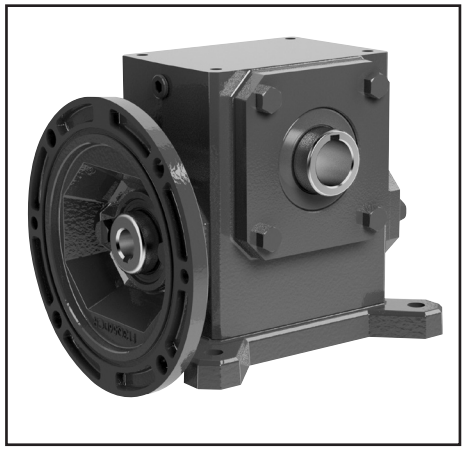

Dimensions (Inches) for Style "QHMT" With Base - Worm Top

C.D.	Components ◆		N.E.M.A Frame	A	B	C	D	E	F	G	H	J	K	L	M	N
	Basic Unit ★	Standard Base Kit ▲														
1.33	133Q56H	133S-BK	56C	5.37	5.38	4.37	3.31	2.19	1.66	0.53	2.25	3.46	5.19	2.61	4.75	2.38
1.54	154Q56H	154S-BK	56C	6.50	5.56	5.25	4.31	2.63	2.16	0.59	2.50	3.99	5.97	3.14	5.42	2.71
1.54	154Q140H	154S-BK	143/145TC	6.50	5.56	5.25	4.31	2.63	2.16	0.59	2.50	3.99	5.97	3.14	5.42	2.71
1.75	175Q56H	175S-BK	56C	6.99	5.75	5.75	4.50	2.88	2.25	0.69	2.75	4.09	6.44	3.24	5.50	2.75
1.75	175Q140H	175S-BK	143/145TC	6.99	5.75	5.75	4.50	2.88	2.25	0.69	2.75	4.09	6.44	3.24	5.50	2.75
2.06	206Q56H	206S-BK	56C	7.69	6.00	6.38	4.69	3.19	2.34	0.72	3.00	4.46	7.09	3.61	6.00	3.00
2.06	206Q140H	206S-BK	143/145TC	7.69	6.00	6.38	4.69	3.19	2.34	0.72	3.00	4.46	7.09	3.61	6.00	3.00
2.37	237Q56H	237S-BK	56C	8.37	6.19	7.06	4.88	3.53	2.44	0.75	3.25	4.63	7.69	3.77	6.00	3.00
2.37	237Q140H	237S-BK	143/145TC	8.37	6.19	7.06	4.88	3.53	2.44	0.75	3.25	4.63	7.69	3.77	6.00	3.00
2.62	262Q56H	262S-BK	56C	9.25	6.50	8.00	5.25	4.00	2.63	0.75	3.69	5.19	8.75	4.34	7.00	3.50
2.62	262Q140H	262S-BK	143/145TC	9.25	6.50	8.00	5.25	4.00	2.63	0.75	3.69	5.19	8.75	4.34	7.00	3.50
2.62	262Q180H	262S-BK	182/184TC	9.25	6.50	8.00	5.25	4.00	2.63	0.75	3.69	5.62	8.75	4.34	7.00	3.50
3.00	300Q56H	300S-BK	56C	10.00	7.50	8.44	5.88	4.22	2.94	0.75	4.00	5.95	9.63	4.84	7.50	3.75
3.00	300Q140H	300S-BK	143/145TC	10.00	7.50	8.44	5.88	4.22	2.94	0.75	4.00	5.95	9.63	4.84	7.50	3.75
3.00	300Q180H	300S-BK	182/184TC	10.00	7.50	8.44	5.88	4.22	2.94	0.75	4.00	6.15	9.63	4.84	7.50	3.75
3.25	325Q56H	325S-BK	56C	11.12	7.75	9.50	6.13	4.75	3.06	0.81	4.38	6.14	10.25	5.02	7.88	3.94
3.25	325Q140H	325S-BK	143/145TC	11.12	7.75	9.50	6.13	4.75	3.06	0.81	4.38	6.14	10.25	5.02	7.88	3.94
3.25	325Q180H	325S-BK	182/184TC	11.12	7.75	9.50	6.13	4.75	3.06	0.81	4.38	6.34	10.25	5.02	7.88	3.94
3.75	375Q56H	375S-BK	56C	12.00	8.63	10.38	7.00	5.19	3.50	0.94	4.81	6.01	11.38	5.74	9.63	4.81
3.75	375Q140H	375S-BK	143/145TC	12.00	8.63	10.38	7.00	5.19	3.50	0.94	4.81	6.01	11.38	5.74	9.63	4.81
3.75	375Q180H	375S-BK	182/184TC	12.00	8.63	10.38	7.00	5.19	3.50	0.94	4.81	7.29	11.38	5.74	9.63	4.81
3.75	375Q210H	375S-BK	213/215TC	12.00	8.63	10.38	7.00	5.19	3.50	0.94	4.81	7.29	11.38	5.74	9.63	4.81
4.50	450Q140H	450S-BK	143/145TC	13.88	9.31	12.13	7.63	6.06	3.81	1.13	5.69	6.69	13.06	6.42	11.13	5.56
4.50	450Q180H	450S-BK	182/184TC	13.88	9.31	12.13	7.63	6.06	3.81	1.13	5.69	7.97	13.06	6.42	11.13	5.56
4.50	450Q210H	450S-BK	213/215TC	13.88	9.31	12.13	7.63	6.06	3.81	1.13	5.69	7.97	13.06	6.42	11.13	5.56
5.16	516Q180H	516S-BK	182/184TC	16.38	10.38	14.13	8.38	7.06	4.19	1.13	6.44	8.78	14.88	7.42	11.31	5.66
5.16	516Q210H	516S-BK	213/215TC	16.38	10.38	14.13	8.38	7.06	4.19	1.13	6.44	8.78	14.88	7.42	11.31	5.66
6.00	600Q180H	600S-BK	182/184TC	19.00	12.00	16.50	9.50	8.25	4.75	1.25	7.75	9.68	17.75	8.25	12.63	6.31
6.00	600Q210H	600S-BK	213/215TC	19.00	12.00	16.50	9.50	8.25	4.75	1.25	7.75	9.68	17.75	8.25	12.63	6.31

C.D.	NEMA Frame	P	R	T	Input		Output Bore ✚		Stock Ratios marked "x "												
					Bore	Keyway	U	W Keyway	5	7.5	10	15	20	25	30	40	50	60	80	100
1.33	56C	3.58	3.25	0.34	0.63	3/16 x 3/32	0.63		x	x	x	x	x	x	x	x	x	x	x	x
1.54	56C	4.04	3.25	0.41	0.63	3/16 x 3/32	0.63		x	x	x	x	x	x	x	x	x	x	x	x
1.54	143/145TC	4.04	3.25	0.41	0.88	3/16 x 3/32	0.63		x	x	x	x	x	-	-	-	-	-	-	-
1.75	56C	4.50	3.25	0.41	0.63	3/16 x 3/32	1.00		x	x	x	x	x	x	x	x	x	x	x	x
1.75	143/145TC	4.50	3.25	0.41	0.88	3/16 x 3/32	1.00		x	x	x	x	x	x	x	x	x	x	-	-
2.06	56C	5.06	3.25	0.47	0.63	3/16 x 3/32	1.50		x	x	x	x	x	x	x	x	x	x	x	x
2.06	143/145TC	5.06	3.25	0.47	0.88	3/16 x 3/32	1.50		x	x	x	x	x	x	x	x	x	x	-	-
2.37	56C	5.63	3.25	0.49	0.63	3/16 x 3/32	1.50	See Keyway Dimensions on page C-63.	-	-	-	x	x	x	x	x	x	x	x	x
2.37	143/145TC	5.63	3.25	0.49	0.88	3/16 x 3/32	1.50		x	x	x	x	x	x	x	x	x	x	-	-
2.62	56C	6.32	3.25	0.53	0.63	3/16 x 3/32	1.94		-	-	-	-	x	x	x	x	x	x	x	x
2.62	143/145TC	6.32	3.25	0.53	0.88	3/16 x 3/32	1.94		x	x	x	x	x	x	x	x	x	x	x	-
2.62	182/184TC	6.32	4.50	0.53	1.13	1/4 x 1/8	1.94		x	x	x	x	x	-	-	-	-	-	-	-
3.00	56C	7.00	3.25	0.53	0.63	3/16 x 3/32	2.19		-	-	-	-	-	-	-	x	x	x	x	x
3.00	143/145TC	7.00	3.25	0.53	0.88	3/16 x 3/32	2.19		-	-	x	x	x	x	x	x	x	x	x	x
3.00	182/184TC	7.00	4.50	0.53	1.13	1/4 x 1/8	2.19		x	x	x	x	x	x	x	-	-	-	-	-
3.25	56C	7.63	3.25	0.53	0.63	3/16 x 3/32	2.19		-	-	-	-	-	-	-	x	x	x	x	x
3.25	143/145TC	7.63	3.25	0.53	0.88	3/16 x 3/32	2.19		-	-	x	x	x	x	x	x	x	x	x	x
3.25	182/184TC	7.63	4.50	0.53	1.13	1/4 x 1/8	2.19		x	x	x	x	x	x	x	-	-	-	-	-
3.75	56C	8.56	3.38	0.59	0.63	3/16 x 3/32	2.44	5/8 x 3/16	-	-	-	-	-	-	-	x	x	x	-	-
3.75	143/145TC	8.56	3.38	0.59	0.88	3/16 x 3/32	2.44	5/8 x 3/16	-	-	x	x	x	x	x	x	x	x	-	-
3.75	182/184TC	8.56	4.50	0.59	1.13	1/4 x 1/8	2.44	5/8 x 3/16	-	-	x	x	x	x	x	x	x	-	-	-
3.75	213/215TC	8.56	4.50	0.59	1.38	5/16 x 5/32	2.44	5/8 x 3/16	-	-	x	x	-	-	-	-	-	-	-	-
4.50	143/145TC	10.19	3.38	0.66	0.88	3/16 x 3/32	2.94	3/4 x 1/4	-	-	-	-	-	-	-	x	x	x	-	-
4.50	182/184TC	10.19	4.50	0.66	1.13	1/4 x 1/8	2.94	3/4 x 1/4	-	-	-	x	x	x	x	x	x	x	-	-
4.50	213/215TC	10.19	4.50	0.66	1.38	5/16 x 5/32	2.94	3/4 x 1/4	-	-	x	x	x	x	-	-	-	-	-	-
5.16	182/184TC	11.60	4.50	0.78	1.13	1/4 x 1/8	3.44	7/8 x 1/4	-	-	-	-	-	-	-	x	x	x	-	-
5.16	213/215TC	11.60	4.50	0.78	1.38	5/16 x 5/32	3.44	7/8 x 1/4	-	-	x	x	x	x	x	-	-	-	-	-
6.00	182/184TC	13.75	4.50	0.91	1.13	5/16 x 5/32	3.94	1 x 1/4	-	-	-	-	x	x	x	x	x	x	-	-
6.00	213/215TC	13.75	4.50	0.91	1.38	5/16 x 5/32	3.94	1 x 1/4	-	-	-	-	-	x	x	x	x	x	-	-

Dimensions (Inches) for Style "QHMB"

Components ◆		HB	PB
Basic Unit ★	Base Kits Standard▲		
133QH	133S-BK	2.14	3.47
154QH	154S-BK	2.52	4.06
175QH	175S-BK	2.63	4.38
206QH	206S-BK	2.75	4.82
237QH	237S-BK	2.81	5.18
262QH	262S-BK	3.19	5.80
300QH	300S-BK	3.38	6.38
325QH	325S-BK	3.50	6.69
375QH	375S-BK	3.75	7.50
450QH	450S-BK	4.06	8.63
516QH	516S-BK	4.40	9.57
600QH	600S-BK	5.25	11.25

Fan Kit

Ref. No.	Fan Kit	AA		L	Wt. Lbs.
		Tap	Deep		
375QH	375 FAN	3/8-24	3/4	7.66	2.8
450QH	450 FAN	3/8-24	3/4	8.36	2.8
516QH	516 FAN	3/8-24	3/4	9.18	2.8
600QH	600 FAN	3/8-24	3/4	10.70	4.2

★ To complete Part No. add shaft assembly (L,R, LR) and ratio symbol to size - for example 133Q56LR10
◆ Components needed to make assembled reducer must be ordered separately. If Fan Kit is required, see the table above.
▲ Standard Base Kit (S-BK) base kits are shown on page C-65. Consult factory for ratios not shown as standard.
✚ Max bore dimension shown. For additional bore sizes, please refer to page C-63.

Style CHMT

Worm Top

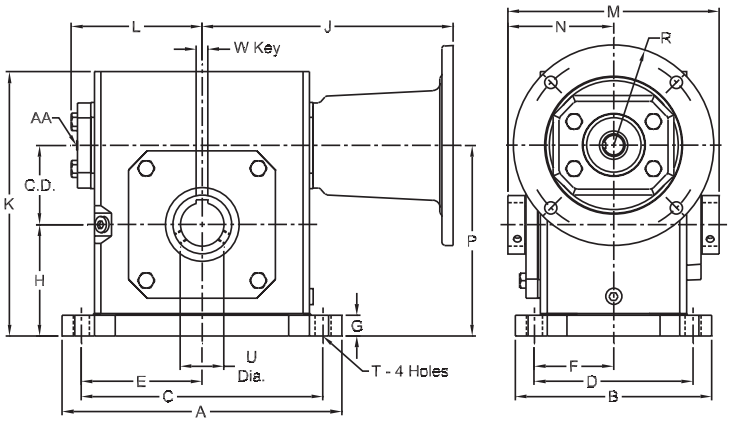

Sample of Components

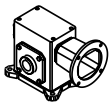

133UH10
133S-BK
133MAK56

Style CHMB

Worm Bottom

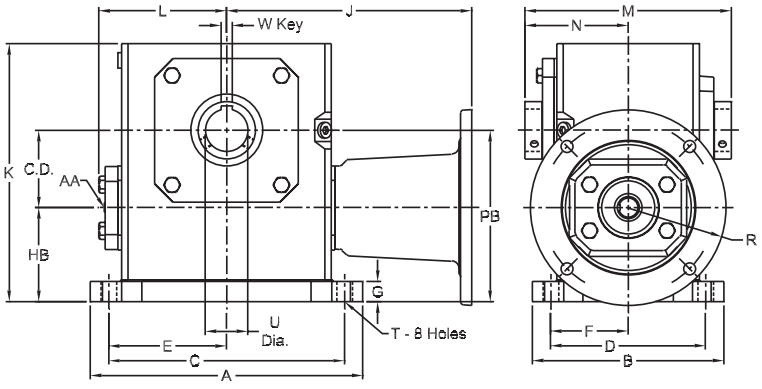

Sample of Components

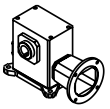

133UH10
133S-BK
133MAK56

Note: When mounting Style "CHMB", interference may occur; use a Riser Block or consult Application Engineering (1 800 626 2093).



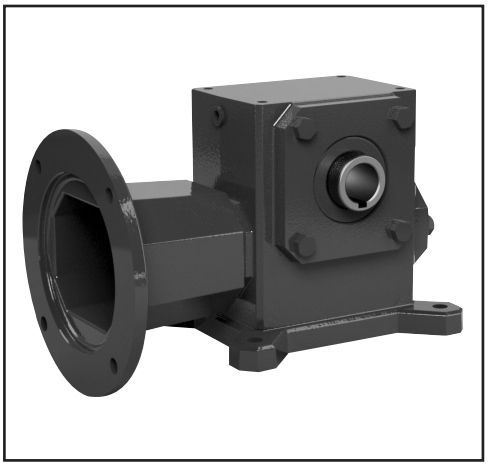

Dimensions (Inches) for Style "CHMT" - With Base - Worm Top

C.D.	Components ◆			A	B	C	D	E	F	G	H	K	L	M	N
	Basic Unit ★	Adapter	Base Kit Standard												
1.33	133UH	See Adapter Kit Table Below	133S-B K	5.37	5.38	4.37	3.31	2.19	1.66	0.53	2.25	5.19	2.61	4.75	2.38
1.54	154UH		154S-BK	6.50	5.56	5.25	4.31	2.63	2.16	0.59	2.50	5.97	3.14	5.42	2.71
1.75	175UH		175S-BK	6.99	5.75	5.75	4.50	2.88	2.25	0.69	2.75	6.44	3.24	5.50	2.75
2.06	206UH		206S-BK	7.69	6.00	6.38	4.69	3.19	2.34	0.72	3.00	7.09	3.61	6.00	3.00
2.37	237UH		237S-BK	8.37	6.19	7.06	4.88	3.53	2.44	0.75	3.25	7.69	3.77	6.00	3.00
2.62	262UH		262S-BK	9.25	6.50	8.00	5.25	4.00	2.63	0.75	3.69	8.75	4.34	7.00	3.50
3	300UH		300S-BK	10.00	7.50	8.44	5.88	4.22	2.94	0.75	4.00	9.63	4.84	7.50	3.75
3.25	325UH		325S-BK	11.12	7.75	9.50	6.13	4.75	3.06	0.81	4.38	10.25	5.02	7.88	3.94
3.75	375UH		375S-BK	12.00	8.63	10.38	7.00	5.19	3.50	0.94	4.81	11.38	5.74	9.63	4.81
4.5	450UH		450S-BK	13.88	9.31	12.13	7.63	6.06	3.81	1.13	5.69	13.06	6.42	11.13	5.56
5.16	516UH		516S-BK	16.38	10.38	14.13	8.38	7.06	4.19	1.13	6.44	14.88	7.42	11.31	5.66
6	600UH		600S-BK	19.00	12.00	16.50	9.50	8.52	4.75	1.25	7.75	17.75	8.25	12.63	6.31

CD	P	T	OUTPUT BORE ✚		Stocked Ratios											
			U	W Keyway	5	7.5	10	15	20	25	30	40	50	60	80	100
1.33	3.58	0.34	0.63	See Keyway Dimensions on page C-63.	x	x	x	x	x	x	x	x	x	x	x	x
1.54	4.04	0.41	0.63		x	x	x	x	x	x	x	x	x	x	x	x
1.75	4.50	0.41	1.00		x	x	x	x	x	x	x	x	x	x	x	x
2.06	5.06	0.47	1.50		x	x	x	x	x	x	x	x	x	x	x	x
2.37	5.63	0.49	1.50		x	x	x	x	x	x	x	x	x	x	x	x
2.62	6.32	0.53	1.94		x	x	x	x	x	x	x	x	x	x	x	x
3.00	7.00	0.53	2.19		x	x	x	x	x	x	x	x	x	x	x	x
3.25	7.63	0.53	2.19		x	x	x	x	x	x	x	x	x	x	x	x
3.75	8.56	0.59	2.44	5/8 x 3/16	-	-	x	x	x	x	x	x	x	x	-	-
4.50	10.19	0.66	2.94	3/4 x 1/4	-	-	x	x	x	x	x	x	x	x	-	-
5.16	11.60	0.78	3.44	7/8 x 1/4	-	-	x	x	x	x	x	x	x	x	-	-
6.00	13.75	0.91	3.94	1 x 1/4	x	-	x	x	x	x	x	x	x	x	-	-

Dimensions (Inches) for Style "CHMB"

Components ◆			HB	PB
Basic Unit ★	Adapter Kit	Base Kit▲ Standard		
133UH	See Adapter Kit Table Below	133S-BK	2.14	3.47
154UH		154S-BK	2.52	4.06
175UH		175S-BK	2.63	4.38
206UH		206S-BK	2.75	4.81
237UH		237S-BK	2.81	5.19
262UH		262S-BK	3.19	5.82
300UH		300S-BK	3.38	6.38
325UH		325S-BK	3.50	6.75
375UH		375S-BK	3.75	7.50
450UH		450S-BK	4.06	8.63
516UH		516S-BK	4.40	9.56
600UH		600S-BK	5.25	11.25

Fan Kit

Ref. No.	Fan Kit	AA		L	Wt. Lbs.
		Tap	Deep		
375U	375 FAN	3/8-24	3/4	7.66	2.8
450U	450 FAN	3/8-24	3/4	8.36	2.8
516U	516 FAN	3/8-24	3/4	9.18	2.8
600U	600 FAN	3/8-24	3/4	10.70	4.2

N.E.M.A. Frame Adapter Kits and Dimensions

C.D.	56C Input: .625 Kw.: 3/16 x 3/32			143/145TC Input: .875 Kw.: 3/16 x 3/32			182/184TC Input: 1.125 KW.: 1/4 x 1/8			213/215TC Input: 1.375 Kw.: 5/16 x 5/32			254/256TC Input: 1.625 Kw.: 3/8 x 3/16		
	Adapter Kit No.	J	R	Adapter Kit No.	J	R	Adapter Kit No.	J	R	Adapter Kit No.	J	R	Adapter Kit No.	J	R
1.33	133MAK56	6.07	3.25	133MAK140	6.07	3.25									
1.54	154MAK56	6.6	3.25	154MAK140	6.6	3.25									
1.75	175MAK56	6.7	3.25	175MAK140	6.7	3.25									
2.06	206MAK56	7.07	3.25	206MAK140	7.07	3.25									
2.37	237MAK56	7.76	3.25	237MAK140	7.76	3.25	237MAK180	8.76	4.5						
2.62	262MAK56	8.32	3.25	262MAK140	8.32	3.25	262MAK180	9.32	4.5						
3.00	300MAK56	8.82	3.25	300MAK140	8.82	3.25	300MAK180	9.82	4.5						
3.25	325MAK56	9.01	3.25	325MAK140	9.01	3.25	325MAK180	10.01	4.5	325MAK210	10.01	4.5			
3.75	375MAK56	11.47	3.38	375MAK140	11.47	3.38	375MAK180	12.92	4.5	375MAK210	12.92	4.5			
4.50				450MAK140	12.15	3.38	450MAK180	13.6	4.5	450MAK210	13.6	4.5			
5.16							516MAK180	14.4	4.5	516MAK210	14.4	4.5			
6.00							600MAK180	16.97	4.5	600MAK210	16.97	4.5	600MAK250	16.97	4.5

★ To complete Part No. ratio symbol to size - for example 133UH10.
◆ Components needed to make assembled reducer must be ordered separately. If Fan Kit is required, see the table above.
▲ Standard Base Kit (S-BK) base kits are shown on page C-65.
✚ Max bore dimension shown. For additional bore sizes, please refer to page C-63.
Motor Adapter Kits Shown on page C-64.

Style UHVL

Vertical Low Base

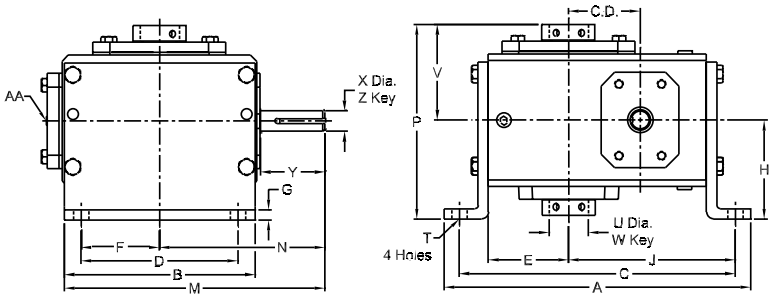

Assembly Drawing and Sample of Components

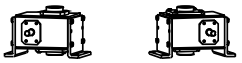

133UH10
133VL-BK

Style UHVH

Vertical High Base

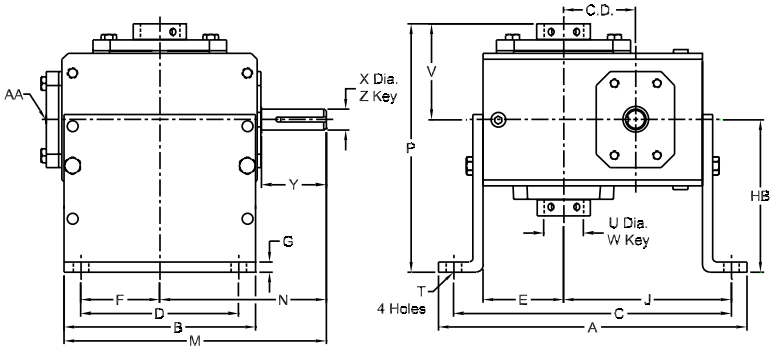

Assembly Drawing and Sample of Components

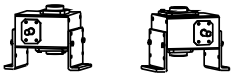

133UH10
133VH-BK

Style UHVJ

Vertical "J" Base

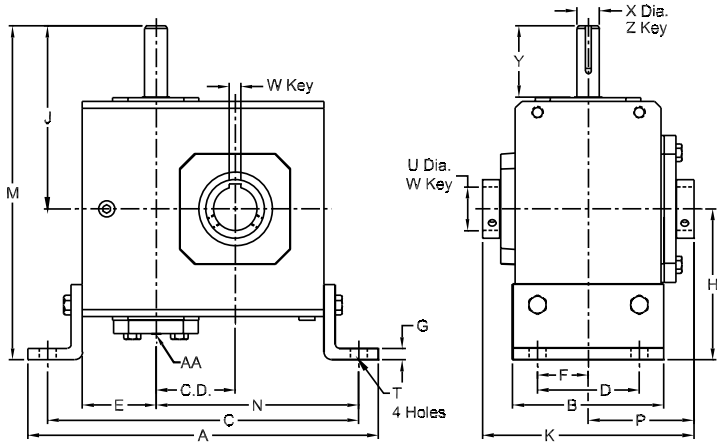

Assembly Drawing and Sample of Components

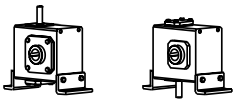

133UH10
133VJ-BK

Note: If mounting a fan unit, fan extends beyond "H" dimension.

Dimensions (Inches) for Style "UHVL" - With Vertical Low Base

C.D.	Components ◆		A	B	C	D	E	F	G	H	J	M	N	P	T	V
	Basic Unit ★	Base Kit														
1.33	133UH	133VL-BK	7.26	4.00	6.50	3.00	1.72	1.50	0.25	2.63	3.86	5.76	3.82	4.75	0.38	2.38
1.54	154UH	154VL-BK	7.88	5.00	7.00	4.00	1.91	2.00	0.25	3.00	4.28	6.76	4.35	5.42	0.44	2.71
1.75	175UH	175VL-BK	8.25	5.00	7.37	4.00	2.06	2.00	0.25	3.00	4.50	6.76	4.45	5.50	0.44	2.75
2.06	206UH	206VL-BK	9.38	6.00	8.38	4.88	2.28	2.44	0.38	3.13	5.09	7.76	4.82	6.00	0.50	3.00
2.37	237UH	237VL-BK	9.94	6.00	8.81	4.88	2.50	2.44	0.38	3.38	5.44	8.38	5.51	6.00	0.50	3.00
2.62	262UH	262VL-BK	11.24	7.00	10.12	5.75	2.94	2.88	0.38	3.63	6.12	9.38	6.07	7.00	0.56	3.50
3.00	300UH	300VL-BK	12.50	8.00	11.13	6.00	3.25	3.00	0.38	3.94	6.75	10.38	6.57	7.50	0.56	3.75
3.25	325UH	325VL-BK	13.00	8.50	11.88	6.13	3.50	3.06	0.38	4.69	7.13	10.88	6.76	7.88	0.56	3.94
3.75	375UH	375VL-BK	15.69	9.50	13.94	8.00	3.44	4.00	0.88	5.25	8.31	13.13	8.38	9.63	0.59	4.81
4.50	450UH	450VL-BK	16.94	10.88	14.94	9.56	4.63	4.78	0.88	5.06	8.94	15.09	9.59	11.13	0.69	5.56
5.16	516UH	516VL-BK	20.57	12.50	18.00	10.00	5.44	5.00	1.00	6.38	10.56	16.93	10.69	11.31	0.78	5.66
6.00	600UH	600VL-BK	23.25	14.75	20.88	11.75	6.63	5.88	1.13	7.31	12.19	19.13	11.75	12.63	0.91	6.31

C.D.	OUTPUT BORE ✚		INPUT SHAFT				Stock Ratios marked "x "											
	U	W Keyway	X	Y	ZKey		5	7.5	10	15	20	25	30	40	50	60	80	100
					Sq.	Lgth.												
1.33	0.63	See Keyway Dimensions on page C-63.	0.50	1.76	0.13	1.00	x	x	x	x	x	x	x	x	x	x	x	x
1.54	0.63		0.63	1.76	0.19	1.38	x	x	x	x	x	x	x	x	x	x	x	x
1.75	1.00		0.63	1.76	0.19	1.38	x	x	x	x	x	x	x	x	x	x	x	x
2.06	1.50		0.63	1.76	0.19	1.38	x	x	x	x	x	x	x	x	x	x	x	x
2.37	1.50		0.75	2.38	0.19	1.63	x	x	x	x	x	x	x	x	x	x	x	x
2.62	1.94		0.75	2.38	0.19	1.63	x	x	x	x	x	x	x	x	x	x	x	x
3.00	2.19		0.88	2.38	0.19	1.63	x	x	x	x	x	x	x	x	x	x	x	x
3.25	2.19		0.88	2.38	0.19	1.63	x	x	x	x	x	x	x	x	x	x	x	x
3.75	2.44	5/8 x 3/16	1.00	2.91	0.25	1.75	-	-	x	x	x	x	x	x	x	x	-	-
4.50	2.94	3/4 x 1/4	1.13	3.48	0.25	2.50	-	-	x	x	x	x	x	x	x	x	-	-
5.16	3.44	7/8 x 1/4	1.25	3.75	0.25	2.56	-	-	x	x	x	x	x	x	x	x	-	-
6.00	3.94	1 x 1/4	1.50	3.75	0.38	2.94	x	-	x	x	x	x	x	x	x	x	-	-

Dimensions (Inches) for Style "UHVH"

Components ◆		HB
Basic Unit ★	Base Kit	
133UH	133VH-BK	3.56
154UH	154VH-BK	4.38
175UH	175VH-BK	4.38
206UH	206VH-BK	4.88
237UH	237VH-BK	5.25
262UH	262VH-BK	5.56
300UH	300VH-BK	5.88
325UH	325VH-BK	6.25
375UH	375VH-BK	7.00
450UH	450VH-BK	8.56
516UH	516VH-BK	8.63
600UH	600VH-BK	9.63

Fan Kit

Ref. No.	Fan Kit	AA		L	Wt. Lbs.
		Tap	Deep		
375UH	375 FAN	3/8-24	3/4	7.66	2.8
450UH	450 FAN	3/8-24	3/4	8.36	2.8
516UH	516 FAN	3/8-24	3/4	9.18	2.8
600UH	600 FAN	3/8-24	3/4	10.70	4.2

Dimensions (Inches) for Style "UHVJ" - With Vertical "J" Base

Components ◆		A	B	C	D	E	F	G	H	J	K	M	N	P	T
Base Unit ★	Base Kit														
133U	133VJ-BK	7.42	2.75	6.42	2.00	1.61	1.00	0.25	2.94	3.82	4.75	6.76	3.93	2.38	0.38
154U	154VJ-BK	8.14	3.50	7.08	2.75	1.93	1.38	0.25	3.50	4.35	5.42	7.85	4.30	2.71	0.44
175U	175VJ-BK	8.51	3.50	7.63	2.50	1.94	1.25	0.25	3.50	4.45	5.50	7.95	4.75	2.75	.44 slot
206U	206VJ-BK	9.76	4.00	8.63	2.63	2.04	1.31	0.38	4.01	4.82	6.00	8.83	5.46	3.00	.56 slot
237U	237VJ-BK	10.31	4.00	9.19	2.88	2.06	1.44	0.38	4.06	5.51	6.00	9.57	6.01	3.00	0.69
262U	262VJ-BK	11.62	5.00	10.38	3.38	2.43	1.69	0.38	5.00	6.07	7.00	11.07	6.76	3.50	0.56
300U	300VJ-BK	12.64	6.00	11.38	3.88	2.63	1.94	0.38	5.62	6.57	7.50	12.19	7.50	3.75	0.56
325U	325VJ-BK	13.14	6.00	11.88	3.88	2.63	1.94	0.38	5.63	6.76	7.88	12.39	8.00	3.94	0.56
375U	375VJ-BK	15.06	6.25	13.31	4.75	2.94	2.38	0.88	6.00	8.38	9.63	14.38	9.06	4.81	0.59
450U	450VJ-BK	16.94	7.38	14.94	5.81	3.06	2.91	0.88	7.38	9.59	11.13	16.96	10.50	5.56	0.69
516U	516VJ-BK	19.38	7.38	17.50	5.81	3.40	2.91	1.00	7.75	10.69	11.31	18.44	12.35	5.66	0.78

✚ Max bore dimension shown. For additional bore sizes, please refer to page C-63.
★ To complete Part No. add ratio symbol to size - for example 133UH10.
◆ Components needed to make assembled reducer must be ordered separately. If Fan Kit is required, see the table above.
133-325 Vertical High and Low Base Kits shown on page C-65.
133-325 Vertical J Base Kits shown on page C-66.
375-600 Vertical High and Low Base Kits shown on page C-66.
375-516 Vertical J Base Kits shown on page C-66.

Style QHVL

Vertical Low Base

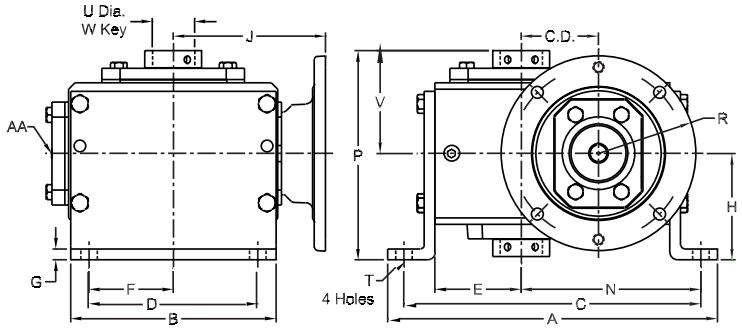

Assembly Drawing and Sample of Components



133Q56H10
133VL-BK

Style QHVH

Vertical High Base

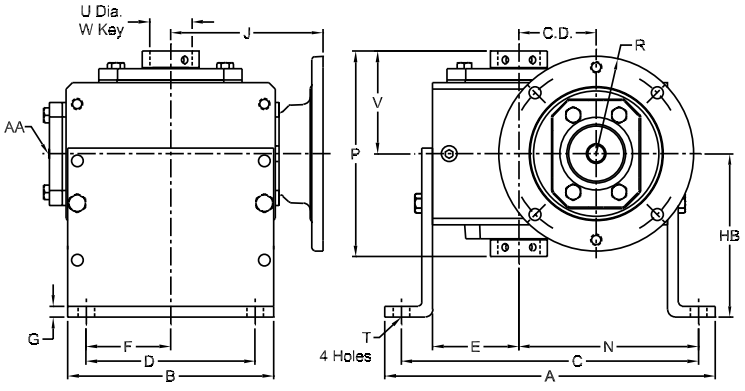

Assembly Drawing and Sample of Components



133Q56H10
133VH-BK



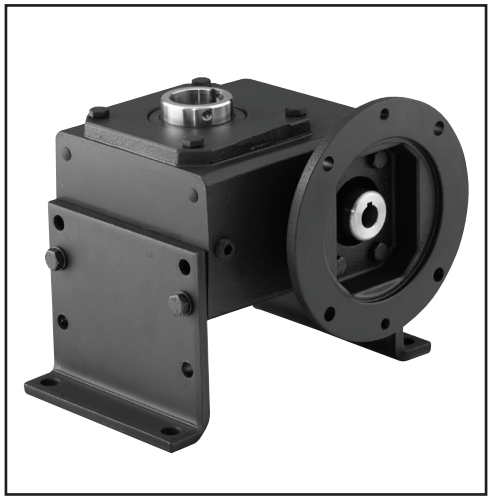

Dimensions (Inches) for Style "QHVL" - With Vertical Low Base

C.D .	Components ◆		N.E.M.A. Frame	A	B	C	D	E	F	G	H	J	N	P	R
	Part No. ★	Base Kit													
1.33	133QH56	133VL-BK	56C	7.26	4.00	6.50	3.00	1.72	1.50	0.25	2.63	3.46	3.86	4.75	3.25
1.54	154QH56	154VL-BK	56C	7.88	5.00	7.00	4.00	1.91	2.00	0.25	3.00	3.99	4.28	5.42	3.25
1.54	154QH140	154VL-BK	143/145TC	7.88	5.00	7.00	4.00	1.91	2.00	0.25	3.00	3.99	4.28	5.42	3.25
1.75	175QH56	175VL-BK	56C	8.25	5.00	7.37	4.00	2.06	2.00	0.25	3.00	4.09	4.50	5.50	3.25
1.75	175QH140	175VL-BK	143/145TC	8.25	5.00	7.37	4.00	2.06	2.00	0.25	3.00	4.09	4.50	5.50	3.25
2.06	206QH56	206VL-BK	56C	9.38	6.00	8.38	4.88	2.28	2.44	0.38	3.13	4.46	5.09	6.00	3.25
2.06	206QH140	206VL-BK	143/145TC	9.38	6.00	8.38	4.88	2.28	2.44	0.38	3.13	4.46	5.09	6.00	3.25
2.37	237QH56	237VL-BK	56C	9.94	6.00	8.81	4.88	2.50	2.44	0.38	3.38	4.63	5.44	6.00	3.25
2.37	237QH140	237VL-BK	143/145TC	9.94	6.00	8.81	4.88	2.50	2.44	0.38	3.38	4.63	5.44	6.00	3.25
2.62	262QH56	262VL-BK	56C	11.24	7.00	10.12	5.75	2.94	2.88	0.38	3.63	5.19	6.12	7.00	3.25
2.62	262QH140	262VL-BK	143/145TC	11.24	7.00	10.12	5.75	2.94	2.88	0.38	3.63	5.19	6.12	7.00	3.25
2.62	262QH180	262VL-BK	182/184TC	11.24	7.00	10.12	5.75	2.94	2.88	0.38	3.63	5.62	6.12	7.00	4.25
3.00	300QH56	300VL-BK	56C	12.50	8.00	11.13	6.00	3.25	3.00	0.38	3.94	5.95	6.75	7.50	3.25
3.00	300QH140	300VL-BK	143/145TC	12.50	8.00	11.13	6.00	3.25	3.00	0.38	3.94	5.95	6.75	7.50	3.25
3.00	300QH180	300VL-BK	182/184TC	12.50	8.00	11.13	6.00	3.25	3.00	0.38	3.94	6.15	6.75	7.50	4.25
3.25	325QH56	325VL-BK	56C	13.00	8.50	11.88	6.13	3.50	3.06	0.38	4.69	6.14	7.13	7.88	3.25
3.25	325QH140	325VL-BK	143/145TC	13.00	8.50	11.88	6.13	3.50	3.06	0.38	4.69	6.14	7.13	7.88	3.25
3.25	325QH180	325VL-BK	182/184TC	13.00	8.50	11.88	6.13	3.50	3.06	0.38	4.69	6.34	7.13	7.88	4.25
3.75	375QH56	375VL-BK	56C	15.69	9.50	13.94	8.00	3.44	4.00	0.88	5.25	6.01	8.31	9.63	3.38
3.75	375QH140	375VL-BK	143/145TC	15.69	9.50	13.94	8.00	3.44	4.00	0.88	5.25	6.01	8.31	9.63	3.38
3.75	375QH180	375VL-BK	182/184TC	15.69	9.50	13.94	8.00	3.44	4.00	0.88	5.25	7.29	8.31	9.63	4.50
3.70	375QH210	375VL-BK	213/215TC	15.69	9.50	13.94	8.00	3.44	4.00	0.88	5.25	7.29	8.31	9.63	4.50
4.50	450QH140	450VL-BK	143/145TC	16.94	10.88	14.94	9.56	4.63	4.78	0.88	5.06	6.69	8.94	11.13	3.38
4.50	450QH180	450VL-BK	182/184TC	16.94	10.88	14.94	9.56	4.63	4.78	0.88	5.06	7.97	8.94	11.13	4.50
4.50	450QH210	450VL-BK	213/215TC	16.94	10.88	14.94	9.56	4.63	4.78	0.88	5.06	7.97	8.94	11.13	4.50
5.16	516QH180	516VL-BK	182/184TC	20.57	12.50	18.00	10.00	5.44	5.00	1.00	6.38	8.78	10.56	11.31	4.50
5.16	516QH210	516VL-BK	213/215TC	20.57	12.50	18.00	10.00	5.44	5.00	1.00	6.38	8.78	10.56	11.31	4.50
6.00	600QH180	600VL-BK	182/184TC	23.25	14.75	20.88	11.75	6.63	5.88	1.13	7.31	9.68	12.19	12.63	4.50
6.00	600QH210	600VL-BK	213/215TC	23.25	14.75	20.88	11.75	6.63	5.88	1.13	7.31	9.68	12.19	12.63	4.50

CD	NEMA Frame	T	V	INPUT		OUTPUT ✚		Stock Ratios marked "x "											
				Bore	Keyway	U	W Keyway	5	7.5	10	15	20	25	30	40	50	60	80	100
1.33	56C	0.38	2.38	0.63	3/16 x 3/32	0.63		x	x	x	x	x	x	x	x	x	x	x	x
1.54	56C	0.44	2.71	0.63	3/16 x 3/32	0.63		x	x	x	x	x	x	x	x	x	x	x	x
1.54	143/145TC	0.44	2.71	0.88	3/16 x 3/32	0.63		x	x	x	x	x	-	-	-	-	-	-	-
1.75	56C	0.44	2.75	0.63	3/16 x 3/32	1.00		x	x	x	x	x	x	x	x	x	x	x	x
1.75	143/145TC	0.44	2.75	0.88	3/16 x 3/32	1.00		x	x	x	x	x	x	x	x	x	x	-	-
2.06	56C	0.50	3.00	0.63	3/16 x 3/32	1.50		x	x	x	x	x	x	x	x	x	x	x	x
2.06	143/145TC	0.50	3.00	0.88	3/16 x 3/32	1.50		x	x	x	x	x	x	x	x	x	x	-	-
2.37	56C	0.50	3.00	0.63	3/16 x 3/32	1.50	See Keyway	-	-	-	x	x	x	x	x	x	x	x	x
2.37	143/145TC	0.50	3.00	0.88	3/16 x 3/32	1.50	Dimensions	x	x	x	x	x	x	x	x	x	x	-	-
2.62	56C	0.56	3.50	0.63	3/16 x 3/32	1.94	on page	-	-	-	-	x	x	x	x	x	x	x	x
2.62	143/145TC	0.56	3.50	0.88	3/16 x 3/32	1.94	C-63.	x	x	x	x	x	x	x	x	x	x	x	-
2.62	182/184TC	0.56	3.50	1.13	1/4X1/8	1.94		x	x	x	x	x	-	-	-	-	-	-	-
3.00	56C	0.56	3.75	0.63	3/16 x 3/32	2.19		-	-	-	-	-	-	-	x	x	x	x	x
3.00	143/145TC	0.56	3.75	0.88	3/16 x 3/32	2.19		-	-	x	x	x	x	x	x	x	x	x	x
3.00	182/184TC	0.56	3.75	1.13	1/4X1/8	2.19		x	x	x	x	x	x	x	-	-	-	-	-
3.25	56C	0.56	3.94	0.63	3/16 x 3/32	2.19		-	-	-	-	-	-	-	x	x	x	x	x
3.25	143/145TC	0.56	3.94	0.88	3/16 x 3/32	2.19		-	-	x	x	x	x	x	x	x	x	x	x
3.25	182/184TC	0.56	3.94	1.13	1/4X1/8	2.19		x	x	x	x	x	x	x	-	-	-	-	-
3.75	56C	0.59	4.81	0.63	3/16 x 3/32	2.44	5/8 x 3/16	-	-	-	-	-	-	-	x	x	x	-	-
3.75	143/145TC	0.59	4.81	0.88	3/16 x 3/32	2.44	5/8 x 3/16	-	-	x	x	x	x	x	x	x	x	-	-
3.75	182/184TC	0.59	4.81	1.13	1/4X1/8	2.44	5/8 x 3/16	-	-	x	x	x	x	x	x	x	-	-	-
3.75	213/215TC	0.59	4.81	1.38	5/16 x 5/32	2.44	5/8 x 3/16	-	-	x	x	-	-	-	-	-	-	-	-
4.50	143/145TC	0.69	5.56	0.88	3/16 x 3/32	2.94	3/4 x 1/4	-	-	-	-	-	-	-	x	x	x	-	-
4.50	182/184TC	0.69	5.56	1.13	1/4X1/8	2.94	3/4 x 1/4	-	-	-	x	x	x	x	x	x	x	-	-
4.50	213/215TC	0.69	5.56	1.38	5/16 x 5/32	2.94	3/4 x 1/4	-	-	x	x	x	x	-	-	-	-	-	-
5.16	182/184TC	0.78	5.66	1.13	1/4X1/8	3.44	7/8 x 1/4	-	-	-	-	-	-	-	x	x	x	-	-
5.16	213/215TC	0.78	5.66	1.38	5/16 x 5/32	3.44	7/8 x 1/4	-	-	x	x	x	x	x	-	-	-	-	-
6.00	182/184TC	0.91	6.31	1.13	5/16 x 5/32	3.94	1 x 1/4	-	-	-	-	x	x	x	x	x	x	-	-
6.00	213/215TC	0.91	6.31	1.38	5/16 x 5/32	3.94	1 x 1/4	-	-	-	-	-	x	x	x	x	x	-	-

Dimensions (Inches) for Style "QHVH" - With Vertical High Base

C.D .	Part No. ★	Base Kit	Frame	HB	C.D .	Part No. ★	Base Kit	Frame	HB
1.33	133Q56H	133VH-BK	56C	3.56	3.25	325Q56H	325VH-BK	56C	6.25
1.54	154Q56H	154VH-BK	56C	4.38	3.25	325Q140H	325VH-BK	143/145TC	6.25
1.54	154Q140H	154VH-BK	143/145TC	4.38	3.25	325Q180H	325VH-BK	182/184TC	6.25
1.75	175Q56H	175VH-BK	56C	4.38	3.75	375Q56H	375VH-BK	56C	7.00
1.75	175Q140H	175VH-BK	143/145TC	4.38	3.75	375Q140H	375VH-BK	143/145TC	7.00
2.06	206Q56H	206VH-BK	56C	4.88	3.75	375Q180H	375VH-BK	182/184TC	7.00
2.06	206Q140H	206VH-BK	143/145TC	4.88	3.70	375Q210H	375VH-BK	213/215TC	7.00
2.37	237Q56H	237VH-BK	56C	5.25	4.50	450Q140H	450VH-BK	143/145TC	8.56
2.37	237Q140H	237VH-BK	143/145TC	5.25	4.50	450Q180H	450VH-BK	182/184TC	8.56
2.62	262Q56H	262VH-BK	56C	5.56	4.50	450Q210H	450VH-BK	213/215TC	8.56
2.62	262Q140H	262VH-BK	143/145TC	5.56	5.16	516Q180H	516VH-BK	182/184TC	8.63
2.62	262Q180H	262VH-BK	182/184TC	5.56	5.16	516Q210H	516VH-BK	213/215TC	8.63
3.00	300Q56H	300VH-BK	56C	5.88	6.00	600Q180H	600VH-BK	182/184TC	9.63
3.00	300Q140H	300VH-BK	143/145TC	5.88	6.00	600Q210H	600VH-BK	213/215TC	9.63
3.00	300Q180H	300VH-BK	182/184TC	5.88					

Fan Kit

Ref. No.	Fan Kit	AA		L	Wt. Lbs.
		Tap	Deep		
375QH	375 FAN	3/8-24	3/4	7.66	2.8
450QH	450 FAN	3/8-24	3/4	8.36	2.8
516QH	516 FAN	3/8-24	3/4	9.18	2.8
600QH	600 FAN	3/8-24	3/4	10.70	4.2

✚ Max bore dimension shown. For additional bore sizes, please refer to page C-63.
★ To complete Part No. add ratio symbol to size - for example 133Q56H10.
◆ Components needed to make assembled reducer must be ordered separately. If Fan Kit is required, see the table above.
133-325 Vertical High and Low Base Kits shown on page C-65.
375-606 Vertical High and Low Base Kits shown on page C-66.

Style QHVJ

Vertical "J" Base

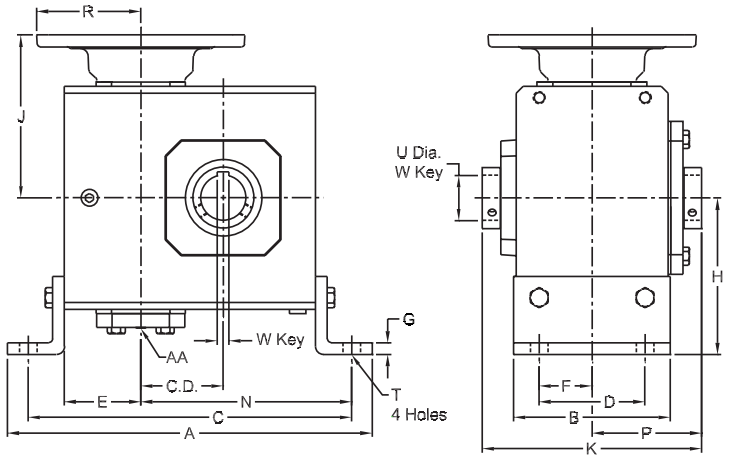

Sample of Components

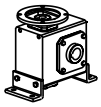

133Q56H10
133VJ-BK

Note: If mounting fan unit, fan extends beyond "H" dimension.



Dimensions (Inches) for Style "QHVJ" - With Vertical "J" Base

C.D .	Components ◆		N.E.M.A. Frame	A	B	C	D	E	F	G	H	J	K	N	P
	Part No. ★	Flange Kit													
1.33	133Q56H	133VJ-BK	56C	7.42	2.75	6.42	2.00	1.61	1.00	0.25	2.94	3.46	4.75	3.93	2.38
1.54	154Q56H	154VJ-BK	56C	8.14	3.50	7.08	2.75	1.93	1.38	0.25	3.50	3.99	5.42	4.30	2.71
1.54	154Q140H	154VJ-BK	143/145TC	8.14	3.50	7.08	2.75	1.93	1.38	0.25	3.50	3.99	5.42	4.30	2.71
1.75	175Q56H	175VJ-BK	56C	8.51	3.50	7.63	2.50	1.94	1.25	0.25	3.50	4.09	5.50	4.75	2.75
1.75	175Q140H	175VJ-BK	143/145TC	8.51	3.50	7.63	2.50	1.94	1.25	0.25	3.50	4.09	5.50	4.75	2.75
2.06	206Q56H	206VJ-BK	56C	9.76	4.00	8.63	2.63	2.04	1.31	0.38	4.01	4.46	6.00	5.46	3.00
2.06	206Q140H	206VJ-BK	143/145TC	9.76	4.00	8.63	2.63	2.04	1.31	0.38	4.01	4.46	6.00	5.46	3.00
2.37	237Q56H	237VJ-BK	56C	10.31	4.00	9.19	2.88	2.06	1.44	0.38	4.06	4.63	6.00	6.01	3.00
2.37	237Q140H	237VJ-BK	143/145TC	10.31	4.00	9.19	2.88	2.06	1.44	0.38	4.06	4.63	6.00	6.01	3.00
2.62	262Q56H	262VJ-BK	56C	11.62	5.00	10.38	3.38	2.43	1.69	0.38	5.00	5.19	7.00	6.76	3.50
2.62	262Q140H	262VJ-BK	143/145TC	11.62	5.00	10.38	3.38	2.43	1.69	0.38	5.00	5.19	7.00	6.76	3.50
2.62	262Q180H	262VJ-BK	182/184TC	11.62	5.00	10.38	3.38	2.43	1.69	0.38	5.00	6.12	7.00	6.76	3.50
3.00	300Q56H	300VJ-BK	56C	12.64	6.00	11.38	3.88	2.63	1.94	0.38	5.62	5.95	7.50	7.50	3.75
3.00	300Q140H	300VJ-BK	143/145TC	12.64	6.00	11.38	3.88	2.63	1.94	0.38	5.62	5.95	7.50	7.50	3.75
3.00	300Q180H	300VJ-BK	182/184TC	12.64	6.00	11.38	3.88	2.63	1.94	0.38	5.62	6.15	7.50	7.50	3.75
3.25	325Q56H	325VJ-BK	56C	13.14	6.00	11.88	3.88	2.63	1.94	0.38	5.63	6.14	7.88	8.00	3.94
3.25	325Q140H	325VJ-BK	143/145TC	13.14	6.00	11.88	3.88	2.63	1.94	0.38	5.63	6.14	7.88	8.00	3.94
3.25	325Q180H	325VJ-BK	182/184TC	13.14	6.00	11.88	3.88	2.63	1.94	0.38	5.63	6.34	7.88	8.00	3.94
3.75	375Q56H	375VJ-BK	56C	15.06	6.25	13.31	4.75	2.94	2.38	0.88	6.00	6.01	9.63	9.06	4.81
3.75	375Q140H	375VJ-BK	143/145TC	15.06	6.25	13.31	4.75	2.94	2.38	0.88	6.00	6.01	9.63	9.06	4.81
3.75	375Q180H	375VJ-BK	182/184TC	15.06	6.25	13.31	4.75	2.94	2.38	0.88	6.00	7.29	9.63	9.06	4.81
3.75	375Q210H	375VJ-BK	213/215TC	15.06	6.25	13.31	4.75	2.94	2.38	0.88	6.00	7.29	9.63	9.06	4.81
4.50	450Q140H	450VJ-BK	143/145TC	16.94	7.38	14.94	5.81	3.06	2.91	0.88	7.38	6.69	11.13	10.50	5.56
4.50	450Q180H	450VJ-BK	182/184TC	16.94	7.38	14.94	5.81	3.06	2.91	0.88	7.38	7.97	11.13	10.50	5.56
4.50	450Q210H	450VJ-BK	213/215TC	16.94	7.38	14.94	5.81	3.06	2.91	0.88	7.38	7.97	11.13	10.50	5.56
5.16	516Q180H	516VJ-BK	182/184TC	19.38	7.38	17.50	5.81	3.40	2.91	1.00	7.75	8.78	11.31	12.35	5.56
5.16	516Q210H	516VJ-BK	213/215TC	19.38	7.38	17.50	5.81	3.40	2.91	1.00	7.75	8.78	11.31	12.35	5.56

CD	NEMA Frame	R	T	INPUT		OUTPUT BORE ✚		Stock Ratios marked "x "											
				Bore	Keyway	U	W Keyway	5	7.5	10	15	20	25	30	40	50	60	80	100
1.33	56C	3.25	0.38	0.63	3/16 x 3/32	0.63		x	x	x	x	x	x	x	x	x	x	x	x
1.54	56C	3.25	0.44	0.63	3/16 x 3/32	0.63		x	x	x	x	x	x	x	x	x	x	x	x
1.54	143/145TC	3.25	0.44	0.88	3/16 x 3/32	0.63		x	x	x	x	x	-	-	-	-	-	-	-
1.75	56C	3.25	0.44	0.63	3/16 x 3/32	1.00		x	x	x	x	x	x	x	x	x	x	x	x
1.75	143/145TC	3.25	0.44	0.88	3/16 x 3/32	1.00		x	x	x	x	x	x	x	x	x	x	-	-
2.06	56C	3.25	0.56	0.63	3/16 x 3/32	1.50		x	x	x	x	x	x	x	x	x	x	x	x
2.06	143/145TC	3.25	0.56	0.88	3/16 x 3/32	1.50		x	x	x	x	x	x	x	x	x	x	-	-
2.37	56C	3.25	0.69	0.63	3/16 x 3/32	1.50	See Keyway Dimensions on page C-63.	-	-	-	x	x	x	x	x	x	x	x	x
2.37	143/145TC	3.25	0.69	0.88	3/16 x 3/32	1.50		x	x	x	x	x	x	x	x	x	x	-	-
2.62	56C	3.25	0.56	0.63	3/16 x 3/32	1.94		-	-	-	-	x	x	x	x	x	x	x	x
2.62	143/145TC	3.25	0.56	0.88	3/16 x 3/32	1.94		x	x	x	x	x	x	x	x	x	x	x	-
2.62	182/184TC	4.50	0.56	1.13	1/4X1/8	1.94		x	x	x	x	x	-	-	-	-	-	-	-
3.00	56C	3.25	0.56	0.63	3/16 x 3/32	2.19		-	-	-	-	-	-	-	x	x	x	x	x
3.00	143/145TC	3.25	0.56	0.88	3/16 x 3/32	2.19		-	-	x	x	x	x	x	x	x	x	x	x
3.00	182/184TC	4.50	0.56	1.13	1/4X1/8	2.19		x	x	x	x	x	x	x	-	-	-	-	-
3.25	56C	3.25	0.56	0.63	3/16 x 3/32	2.19		-	-	-	-	-	-	-	x	x	x	x	x
3.25	143/145TC	3.25	0.56	0.88	3/16 x 3/32	2.19		-	-	x	x	x	x	x	x	x	x	x	x
3.25	182/184TC	4.50	0.56	1.13	1/4X1/8	2.19		x	x	x	x	x	x	x	-	-	-	-	-
3.75	56C	3.38	0.59	0.63	3/16 x 3/32	2.44	5/8 x 3/16	-	-	-	-	-	-	-	x	x	x	-	-
3.75	143/145TC	3.38	0.59	0.88	3/16 x 3/32	2.44	5/8 x 3/16	-	-	x	x	x	x	x	x	x	x	-	-
3.75	182/184TC	4.50	0.59	1.13	1/4X1/8	2.44	5/8 x 3/16	-	-	x	x	x	x	x	x	x	-	-	-
3.75	213/215TC	4.50	0.59	1.38	5/16 x 5/32	2.44	5/8 x 3/16	-	-	x	x	-	-	-	-	-	-	-	-
4.50	143/145TC	3.38	0.69	0.88	3/16 x 3/32	2.94	3/4 x 1/4	-	-	-	-	-	-	-	x	x	x	-	-
4.50	182/184TC	4.50	0.69	1.13	1/4X1/8	2.94	3/4 x 1/4	-	-	-	x	x	x	x	x	x	x	-	-
4.50	213/215TC	4.50	0.69	1.38	5/16 x 5/32	2.94	3/4 x 1/4	-	-	x	x	x	x	-	-	-	-	-	-
5.16	182/184TC	4.50	0.78	1.13	1/4X1/8	3.44	7/8 x 1/4	-	-	-	-	-	-	-	x	x	x	-	-
5.16	213/215TC	4.50	0.78	1.38	5/16 x 5/32	3.44	7/8 x 1/4	-	-	x	x	x	x	x	-	-	-	-	-

Fan Kit

Ref. No.	Fan Kit	AA		L	Wt. Lbs.
		Tap	Deep		
375QH	375 FAN	3/8-24	3/4	7.66	2.8
450QH	450 FAN	3/8-24	3/4	8.36	2.8
516QH	516 FAN	3/8-24	3/4	9.18	2.8
600QH	600 FAN	3/8-24	3/4	10.70	4.2

✚ Max bore dimension shown. For additional bore sizes, please refer to page C-63.
★ To complete Part No. add ratio symbol to size - for example 133Q56H10.
◆ Components needed to make assembled reducer must be ordered separately. If Fan Kit is required, see the table above.
133-325 Vertical J Base Kits shown on page C-65.
375-516 Vertical J Base Kits shown on page C-66.

Style CHVL

Vertical Low Base

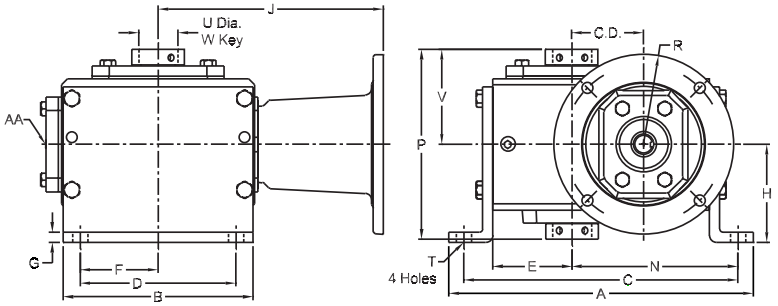

Assembly Drawing and Sample of Components



133UH10
133VL-BK
133MAK56

Style CHVH

Vertical High Base

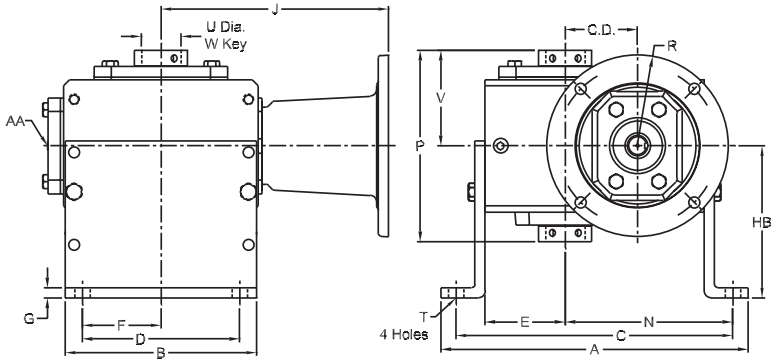

Assembly Drawing and Sample of Components

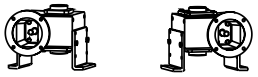

133UH10
133VH-BK
133MAK56

Style CHVJ

Vertical "J" Base

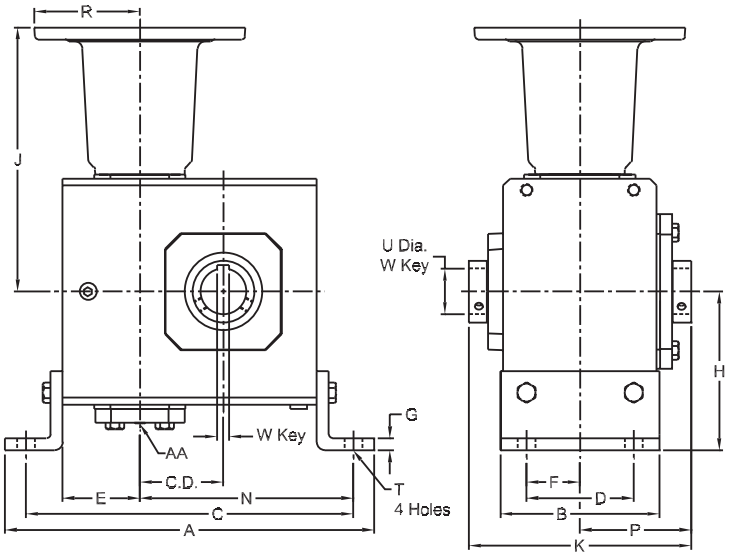

Sample of Components

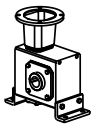

133UH10
133VJ-BK
133MAK56

Note: If mounting fan unit, fan extends beyond "H" dimension.

Dimensions (Inches) for Style "CHVL" - Vertical Low Base

C.D.	Components ◆			A	B	C	D	E	F	G	H	N	P	T	V
	Basic Unit ★	Adapter Kit	Base Kit												
1.33	133UH	See Adapter Kit Table Below	133VL-B K	7.26	4.00	6.50	3.00	1.72	1.50	0.25	2.63	3.86	4.75	0.38	2.38
1.54	154UH		154VL-BK	7.88	5.00	7.00	4.00	1.91	2.00	0.25	3.00	4.28	5.42	0.44	2.71
1.75	175UH		175VL-BK	8.25	5.00	7.37	4.00	2.06	2.00	0.25	3.00	4.50	5.50	0.44	2.75
2.06	206UH		206VL-BK	9.38	6.00	8.38	4.88	2.28	2.44	0.38	3.13	5.09	6.00	0.50	3.00
2.37	237UH		237VL-BK	9.94	6.00	8.81	4.88	2.50	2.44	0.38	3.38	5.44	6.00	0.50	3.00
2.62	262UH		262VL-BK	11.24	7.00	10.12	5.75	2.94	2.88	0.38	3.63	6.12	7.00	0.56	3.50
3.00	300UH		300VL-BK	12.50	8.00	11.13	6.00	3.25	3.00	0.38	3.94	6.75	7.50	0.56	3.75
3.25	325UH		325VL-BK	13.00	8.50	11.88	6.13	3.50	3.06	0.38	4.69	7.13	7.88	0.56	3.94
3.75	375UH		375VL-BK	15.69	9.50	13.94	8.00	3.44	4.00	0.88	5.25	8.31	9.63	0.59	4.81
4.50	450UH		450VL-BK	16.94	10.88	14.94	9.56	4.63	4.78	0.88	5.06	8.94	11.13	0.69	5.56
5.16	516UH		516VL-BK	20.57	12.50	18.00	10.00	5.44	5.00	1.00	6.38	10.56	11.31	0.78	5.66
6.00	600UH		600VL-BK	23.25	14.75	20.88	11.75	6.63	5.88	1.13	7.31	12.19	12.63	0.91	6.31

C.D.	OUTPUT BORE ✚		Stock Ratios marked "x "										
	U	W Keyway	5	7.5	10	15	20	25	30	40	50	60	80	100
1.33	0.63	See Keyway Dimensions on page C-63.	x	x	x	x	x	x	x	x	x	x	x	x
1.54	0.63		x	x	x	x	x	x	x	x	x	x	x	x
1.75	1.00		x	x	x	x	x	x	x	x	x	x	x	x
2.06	1.50		x	x	x	x	x	x	x	x	x	x	x	x
2.37	1.50		x	x	x	x	x	x	x	x	x	x	x	x
2.62	1.94		x	x	x	x	x	x	x	x	x	x	x	x
3.00	2.19		x	x	x	x	x	x	x	x	x	x	x	x
3.25	2.19		x	x	x	x	x	x	x	x	x	x	x	x
3.75	2.44	5/8 x 3/16	-	-	x	x	x	x	x	x	x	x	-	-
4.50	2.94	3/4 x 1/4	-	-	x	x	x	x	x	x	x	x	-	-
5.16	3.44	7/8 x 1/4	-	-	x	x	x	x	x	x	x	x	-	-
6.00	3.94	1 x 1/4	x	-	x	x	x	x	x	x	x	x	-	-

Dimensions (Inches) for Style "CHVH"

C.D.	Components ◆			HB
	Basic Unit ★	Adapter Kit	Base Kit	
1.33	133UH	See Adapter Kit Table Below	133VH-BK	3.56
1.54	154UH		154VH-BK	4.38
1.75	175UH		175VH-BK	4.38
2.06	206UH		206VH-BK	4.88
2.37	237UH		237VH-BK	5.25
2.62	262UH		262VH-BK	5.56
3	300UH		300VH-BK	5.88
3.25	325UH		325VH-BK	6.25
3.75	375UH		375VH-BK	7.00
4.5	450UH		450VH-BK	8.56
5.16	516UH		516VH-BK	8.63
6	600UH		600VH-BK	9.63

Fan Kit

Ref. No.	Fan Kit	AA		L	Wt. Lbs.
		Tap	Deep		
375UH	375 FAN	3/8-24	3/4	7.66	2.8
450UH	450 FAN	3/8-24	3/4	8.36	2.8
516UH	516 FAN	3/8-24	3/4	9.18	2.8
600UH	600 FAN	3/8-24	3/4	10.70	4.2

Dimensions (Inches) for Style "CHVJ" - Vertical "J" Base

C.D.	Components ◆			A	B	C	D	E	F	G	H	K	N	P	T
	Basic Unit ★	Adapter Kit	Base Kit												
1.33	133UH	See Adapter Kit Table Below	133VJ-BK	7.42	2.75	6.42	2.00	1.61	1.00	0.25	2.94	4.75	3.93	2.38	0.38
1.54	154UH		154VJ-BK	8.14	3.50	7.08	2.75	1.93	1.38	0.25	3.50	5.42	4.30	2.71	0.44
1.75	175UH		175VJ-BK	8.51	3.50	7.63	2.50	1.94	1.25	0.25	3.50	5.50	4.75	2.75	0.44
2.06	206UH		206VJ-BK	9.76	4.00	8.63	2.63	2.04	1.31	0.38	4.01	6.00	5.46	3.00	0.56
2.37	237UH		237VJ-BK	10.31	4.00	9.19	2.88	2.06	1.44	0.38	4.06	6.00	6.01	3.00	0.69
2.62	262UH		262VJ-BK	11.62	5.00	10.38	3.38	2.43	1.69	0.38	5.00	7.00	6.76	3.50	0.56
3	300UH		300VJ-BK	12.64	6.00	11.38	3.88	2.63	1.94	0.38	5.62	7.50	7.50	3.75	0.56
3.25	325UH		325VJ-BK	13.14	6.00	11.88	3.88	2.63	1.94	0.38	5.63	7.88	8.00	3.94	0.56
3.75	375UH		375VJ-BK	15.06	6.25	13.31	4.75	2.94	2.38	0.88	6.00	9.63	9.06	4.81	0.59
4.5	450UH		450VJ-BK	16.94	7.38	14.94	5.81	3.06	2.91	0.88	7.38	11.13	10.50	5.56	0.69
5.16	516UH		516VJ-BK	19.38	7.38	17.50	5.81	3.40	2.91	1.00	7.75	11.31	12.35	5.66	0.78

N.E.M.A. Frame Adapter Kits and Dimensions

C.D.	56C Input: .625 Kw.: 3/16 x 3/32			143/145TC Input: .875 Kw.: 3/16 x 3/32			182/184TC Input: 1.125 KW.: 1/4 x 1/8			213/215TC Input: 1.375 Kw.: 5/16 x 5/32			254/256TC Input: 1.625 Kw.: 3/8 x 3/16		
	Adapter Kit No.	J	R	Adapter Kit No.	J	R	Adapter Kit No.	J	R	Adapter Kit No.	J	R	Adapter Kit No.	J	R
1.33	133MAK56	6.07	3.25	133MAK140	6.07	3.25									
1.54	154MAK56	6.6	3.25	154MAK140	6.6	3.25									
1.75	175MAK56	6.7	3.25	175MAK140	6.7	3.25									
2.06	206MAK56	7.07	3.25	206MAK140	7.07	3.25									
2.37	237MAK56	7.76	3.25	237MAK140	7.76	3.25	237MAK180	8.76	4.5						
2.62	262MAK56	8.32	3.25	262MAK140	8.32	3.25	262MAK180	9.32	4.5						
3.00	300MAK56	8.82	3.25	300MAK140	8.82	3.25	300MAK180	9.82	4.5						
3.25	325MAK56	9.01	3.25	325MAK140	9.01	3.25	325MAK180	10.01	4.5	325MAK210	10.01	4.5			
3.75	375MAK56	11.47	3.38	375MAK140	11.47	3.38	375MAK180	12.92	4.5	375MAK210	12.92	4.5			
4.50				450MAK140	12.15	3.38	450MAK180	13.6	4.5	450MAK210	13.6	4.5			
5.16							516MAK180	14.4	4.5	516MAK210	14.4	4.5			
6.00							600MAK180	16.97	4.5	600MAK210	16.97	4.5	600MAK250	16.97	4.5

✚ Max bore dimension shown. For additional bore sizes, please refer to page C-63.
★ To complete Part No. add ratio symbol to size - for example 133UH10.
◆ Components needed to make assembled reducer must be ordered separately. If Fan Kit is required, see the table above.
133-325 Vertical High and Low Base Kits shown on page C-65.
133-325 Vertical J Base Kits shown on page C-66.
375-606 Vertical High and Low Base Kits shown on page C-66.
375-516 Vertical J Base Kits shown on page C-66.
Motor Adapter Kits Shown on page C-64.

Keyway Sizes For Hollow Output Reducers Sizes 133 - 325

Bore Size	Key Width	133 KW Length: 4.75	154 KW Length: 5.42	175 KW Length: 5.50	206 KW Length: 6.00	237 KW Length: 6.00	262 KW Length: 7.00	300 KW Length: 7.50	325 KW Length: 7.875
0.500	0.125	1/8 X 1/8 X 1-1/2	1/8 X 1/8 X 1-1/2						
0.625	0.188	3/16 X 3/16 X 1-1/2	3/16 X 3/16 X 1-1/2	3/16 X 3/16 X 1-1/2					
0.688	0.188			3/16 X 3/16 X 2					
0.750	0.188		3/16 X 3/16 X 2	3/16 X 3/16 X 2					
0.875	0.188			3/16 X 3/16 X 2	3/16 X 3/16 X 2	3/16 X 3/16 X 2	3/16 X 3/16 X 2		
1.000	0.250			1/4 X 1/4 X 2-1/2	1/4 X 1/4 X 2-1/2	1/4 X 1/4 X 2-1/2	1/4 X 1/4 X 2-1/2		
1.063	0.250				1/4 X 1/4 X 2-1/2				
1.125	0.250				1/4 X 1/4 X 2-1/2	1/4 X 1/4 X 2-1/2	1/4 X 1/4 X 2-1/2	1/4 X 1/4 X 2-1/2	1/4 X 1/4 X 2-1/2
1.188	0.250				1/4 X 1/4 X 2-1/2	1/4 X 1/4 X 2-1/2	1/4 X 1/4 X 2-1/2	1/4 X 1/4 X 2-1/2	1/4 X 1/4 X 2-1/2
1.250	0.250				1/4 X 1/4 X 2-1/2	1/4 X 1/4 X 2-1/2	1/4 X 1/4 X 2-1/2	1/4 X 1/4 X 2-1/2	1/4 X 1/4 X 2-1/2
1.375	0.313				5/16 X 5/16 X 2-1/2	5/16 X 5/16 X 2-1/2		5/16 X 5/16 X 2-1/2	
1.438	0.375				3/8 X 5/16 X 3	3/8 X 5/16 X 3	3/8 X 5/16 X 3	3/8 X 3/8 X 3	3/8 X 3/8 X 3
1.500	0.375				3/8 X 5/16 X 3	3/8 X 5/16 X 3	3/8 X 5/16 X 3	3/8 X 3/8 X 3	3/8 X 3/8 X 3
1.625	0.375						3/8 X 3/8 X 3	3/8 X 3/8 X 3	3/8 X 3/8 X 3
1.688	0.375						3/8 X 3/8 X 3	3/8 X 3/8 X 3	3/8 X 3/8 X 3
1.750	0.375						3/8 X 3/8 X 3	3/8 X 3/8 X 3	3/8 X 3/8 X 3
1.875	0.500						1/2 X 1/2 X 3-3/8	1/2 X 1/2 X 3-3/8	1/2 X 1/2 X 3-3/8
1.938	0.500						1/2 X 1/2 X 3-3/8	1/2 X 1/2 X 3-3/8	1/2 X 1/2 X 3-3/8
2.000	0.500							1/2 X 1/2 X 3-3/8	1/2 X 1/2 X 3-3/8
2.125	0.500							1/2 X 3/8 X 3	1/2 X 3/8 X 3
2.188	0.500							1/2 X 3/8 X 3-3/8	1/2 X 3/8 X 3-3/8

Bushings for Raider® Hollow Shaft Reducers

Reducer C.D.	Shaft Dia.	Shaft Keyseat	Bushing Kit No.	Wt. Lbs.
3.75	1 3/8	5/16 x 5/32 x 3 1/2	207BU106	6.4
	1 7/16	3/8 x 3/16 x 3 1/2	207BU107	6.1
	1 1/2	3/8 x 3/16 x 3 1/2	207BU108	5.8
	1 5/8	3/8 x 3/16 x 3 1/2	207BU110	5.2
	1 11/16	3/8 x 3/16 x 3 1/2	207BU111	4.9
	1 3/4	3/8 x 3/16 x 3 1/2	207BU112	4.5
	1 7/8	1/2 x 1/4 x 3 1/2	207BU114	3.8
	1 15/16	1/2 x 1/4 x 3 1/2	207BU115	3.5
	2	1/2 x 1/4 x 3 1/2	207BU200	3.1
	2 1/8	1/2 x 1/4 x 3 1/2	207BU202	2.3
	2 3/16	1/2 x 1/4 x 3 1/2	207BU203	1.8
	2 1/4	1/2 x 1/4 x 3 1/2	207BU204	1.4
4.50	1 7/16	3/8 x 3/16 x 4	215BU107	11.7
	1 1/2	3/8 x 3/16 x 4	215BU108	11.4
	1 11/16	3/8 x 3/16 x 4	215BU111	10.3
	1 3/4	3/8 x 3/16 x 4	215BU112	9.9
	1 7/8	1/2 x 1/4 x 4	215BU114	9.1
	1 15/16	1/2 x 1/4 x 4	215BU115	8.7
	2	1/2 x 1/4 x 4	215BU200	8.3
	2 3/16	1/2 x 1/4 x 4	215BU203	6.9
	2 1/4	1/2 x 1/4 x 4	215BU204	6.4
	2 7/16	5/8 x 5/16 x 4	215BU207	4.8
	2 1/2	5/8 x 5/16 x 4	215BU208	4.3
	2 11/16	5/8 x 5/16 x 4	215BU211	2.5
5.16	1 15/16	1/2 x 1/4 x 4 1/2	307BU115	16.2
	2	1/2 x 1/4 x 4 1/2	307BU200	15.7
	2 3/16	1/2 x 1/4 x 4 1/2	307BU203	14.1
	2 1/4	1/2 x 1/4 x 4 1/2	307BU204	13.6
	2 7/16	5/8 x 5/16 x 4 1/2	307BU207	11.8
	2 1/2	5/8 x 5/16 x 4 1/2	307BU208	11.2
	2 11/16	5/8 x 5/16 x 4 1/2	307BU211	9.3
	2 7/8	3/4 x 3/8 x 4 1/2	307BU214	7.1
	2 15/16	3/4 x 3/8 x 4 1/2	307BU215	6.4
6.00	2 7/16	5/8 x 5/16 x 4 1/2	315BU207	19.2
	2 1/2	5/8 x 5/16 x 4 1/2	315BU208	18.6
	2 11/16	5/8 x 5/16 x 4 1/2	315BU211	16.6
	2 13/16	3/4 x 3/8 x 4 1/2	315BU213	15.2
	2 7/8	3/4 x 3/8 x 4 1/2	315BU214	14.5
	2 15/16	3/4 x 3/8 x 4 1/2	315BU215	13.8
	3	3/4 x 3/8 x 4 1/2	315BU300	13.1
	3 3/16	3/4 x 3/8 x 4 1/2	315BU303	10.7
	3 7/16	7/8 x 7/16 x 4 1/2	315BU307	7.4

Fan Kit

Fan Kit	Wt. Lbs.
375 Fan Kit	2.8
450 Fan Kit	2.8
516 Fan Kit	2.8
600 Fan Kit	4.2

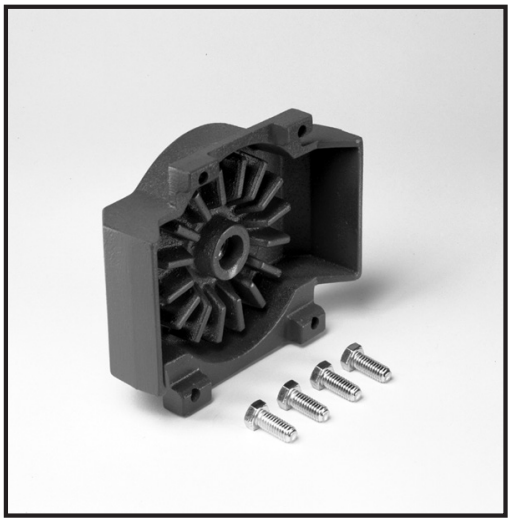

N.E.M.A. Frame Adapter Kit

Kit Part No.	Frame Size
133MAK56	56C
154MAK56	56C
154MAK140	143/145TC
175MAK56	56C
175MAK140	143/145TC
206MAK56	56C
206MAK140	143/145TC
237MAK56	56C
237MAK140	143/145TC
237MAK180	182/184TC
262MAK56	56C
262MAK140	143/145TC
262MAK180	182/184TC
300MAK56	56C
300MAK140	143/145TC
300MAK180	182/184TC
325MAK56	56C
325MAK140	143/145TC
325MAK180	182/184TC
325MAK210	213/215TC
375MAK56	56C
375MAK140	143/145TC
375MAK180	182/184TC
375MAK210	213/215TC
450MAK140	143/145TC
450MAK180	182/184TC
450MAK210	213/215TC
516MAK180	182/184TC
516MAK210	213/215TC
600MAK180	182/184TC
600MAK210	213/315TC
600MAK250	254/256TC



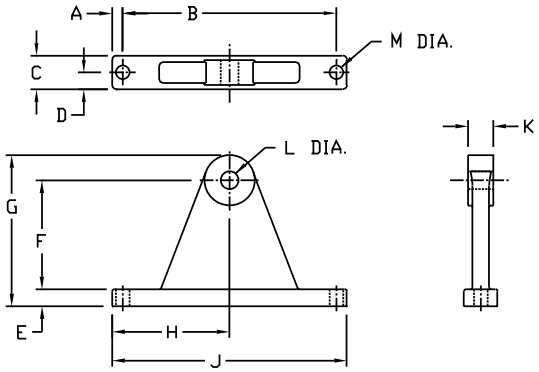

133-325 Torque Arm Kit

Dimensions (Inches) for Torque Arm Kit (133 - 325)

Part No.	A	B	C	D	E	F	G	H	J	K	L	M
133H-TAK	0.63	3.25	1.50	0.67	0.19	1.06	2.00	2.00	4.00	0.19	0.53	0.38
154H-TAK	0.50	4.19	0.75	0.38	0.68	1.82	3.25	2.59	5.19	0.75	0.53	0.343
175H-TAK	0.50	4.19	0.75	0.38	0.68	1.82	3.25	2.59	5.19	0.75	0.53	0.343
206H-TAK	0.38	5.00	0.75	0.38	0.44	2.71	3.90	2.88	5.76	0.94	0.53	0.406
237H-TAK	0.50	5.00	1.00	0.50	0.50	2.75	4.00	3.00	6.00	0.75	0.53	0.406
262H-TAK	0.50	6.37	1.00	0.50	0.50	3.25	4.50	3.68	7.37	0.94	0.53	0.406
300H-TAK	0.56	7.00	1.25	0.63	0.62	4.38	5.88	4.06	8.12	0.94	0.53	0.468
325H-TAK	0.62	7.50	1.25	0.63	0.62	4.38	5.88	4.38	8.75	0.94	0.53	0.468

Dimensions (Inches) for Torque Arm Kit (375 - 600)

Part No.	A	B	C	D	E	F
375H-TAK	8.50	4.25	1.68	3.00	0.53	0.531
450H-TAK	9.56	4.78	1.94	3.50	0.81	0.656
516H-TAK	11.00	5.50	1.75	4.00	0.81	0.687
600H-TAK	12.75	6.38	1.75	4.63	0.81	0.687

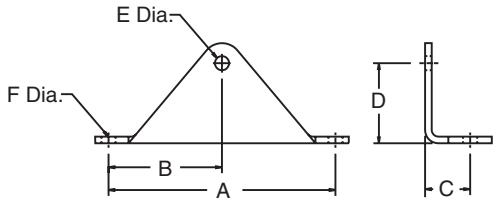

375-600 Torque Arm Kit

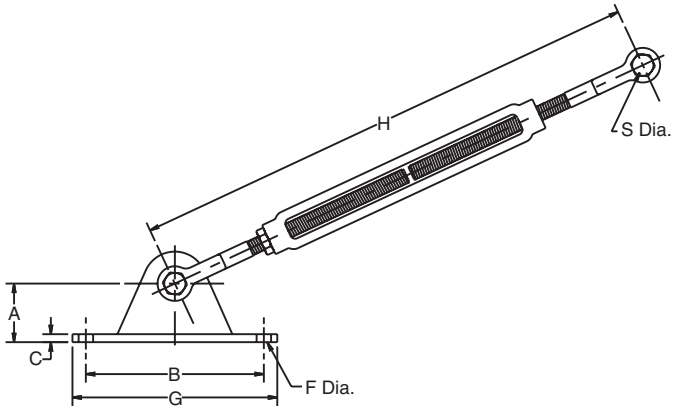

Dimensions (Inches) for Adjustable Torque Arm Kit

Part No.	B	C	F	G	H	S
133-375ATAK	2.50	0.18	0.375	3.50	19-25	0.53
450-600ATAK	3.00	0.18	0.438	4.25	27-33	0.81

Dimensions (Inches) for Horizontal Standard Base Kit (133 - 325)

Part Number	A	B	C	D	E	F	G	H	J	K	L	M	N
133S-BK	0.50	4.38	5.38	0.50	3.31	5.38	1.06	3.25	2.00	0.53	0.343	0.343	0.47
154S-BK	0.62	5.25	6.49	0.62	4.31	5.55	1.15	4.19	2.75	0.59	0.344	0.406	0.56
175S-BK	0.63	5.75	7.00	0.63	4.50	5.75	1.41	4.19	2.75	0.69	0.34	0.406	0.63
206S-BK	0.66	6.38	7.69	0.66	4.69	6.00	1.34	5.00	2.88	0.72	0.406	0.468	0.66
237S-BK	0.66	7.06	8.38	0.66	4.88	6.19	1.03	5.00	2.88	0.75	0.406	0.469	0.69
262S-BK	0.63	8.00	9.25	0.63	5.25	6.50	1.44	6.38	3.38	0.75	0.406	0.531	0.69
300S-BK	0.78	8.44	10.00	0.81	5.88	7.50	1.50	7.00	4.00	0.75	0.469	0.531	0.69
325S-BK	0.81	9.50	11.13	0.81	6.13	7.75	1.81	7.50	4.00	0.88	0.468	0.531	0.81

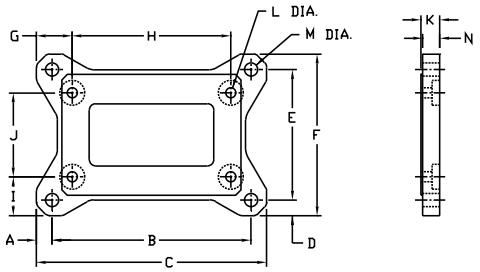

Dimensions (Inches) for Horizontal Standard Base Kit (375 - 600)

Part Number	AB	BB	C	CB	D	DB	G	K	W
375S-BK	12.00	8.63	8.50	10.38	4.75	7.00	0.94	0.594	2.88
450S-BK	13.88	9.33	9.56	12.12	5.81	7.63	1.12	0.656	2.88
516S-BK	16.38	10.37	11.00	14.13	5.81	8.37	1.12	0.781	3.47
600S-BK	19.00	12.00	12.75	16.50	6.38	9.50	1.25	0.906	4.00

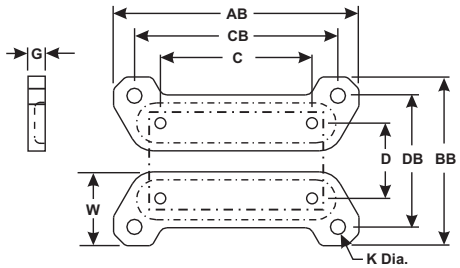

Dimensions (Inches) for Flange Kit

Part Number	A	B	C	D	E	F	G	H	J	K	L	M
133H-FK	5.55	4.66	1.72	2.00	4.25	2.13	3.25	1.63	0.340	5.00	3.62	0.19
154H-FK	6.19	5.38	1.91	2.19	4.75	2.38	4.19	2.10	0.344	5.00	3.63	0.19
175H-FK	6.66	5.75	2.06	2.12	4.81	2.41	4.19	2.10	0.340	5.88	4.06	0.19
206H-FK	7.47	6.38	2.28	2.31	5.75	2.88	5.00	2.50	0.410	6.50	4.50	0.19
237H-FK	8.30	6.94	2.50	2.28	6.00	3.00	5.00	2.50	0.410	7.50	5.00	0.25
262H-FK	9.25	8.00	2.94	2.37	7.18	3.59	6.38	3.19	0.410	8.00	6.00	0.25
300H-FK	10.02	8.88	3.25	2.50	8.50	4.25	7.00	3.50	0.410	9.00	7.00	0.25
325H-FK	10.89	9.38	3.50	3.25	8.50	4.25	7.50	3.75	0.563	10.00	7.00	0.25
375H-FK	11.85	10.44	3.88	3.08	9.54	4.77	8.50	4.25	0.563	11.50	8.00	0.25
450H-FK	13.10	11.94	4.50	3.96	10.88	5.44	9.56	4.78	0.563	11.50	9.00	0.31
516H-FK	15.33	13.75	5.31	3.67	12.50	6.25	11.00	5.50	0.687	14.00	10.00	0.31
600H-FK	18.22	16.50	6.50	4.03	14.50	7.25	12.75	6.38	0.687	15.56	12.00	0.38

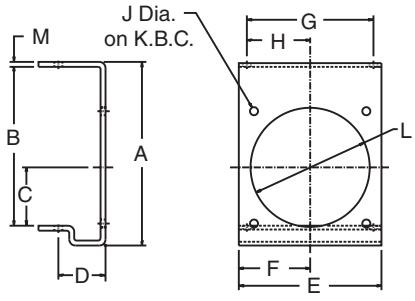

Dimensions (Inches) for Vertical Low/High Base Kit (133 - 325)

Part Number	A	B	C	D	F	G	H	J	K	L	M	N
133VL-BK & VH-BK	0.38	3.25	4.00	3.08	0.94	1.63	0.343	0.50	3.00	0.92	0.375	0.25
154VL-BK & VH-BK	0.41	4.19	5.00	3.52	1.38	1.63	0.343	0.50	4.00	0.81	0.438	0.25
175VL-BK & VH-BK	0.41	4.19	5.00	3.52	1.38	1.63	0.343	0.50	4.00	0.81	0.438	0.25
206VL-BK & VH-BK	0.50	5.00	6.00	3.89	1.75	1.69	0.438	0.46	4.88	1.00	0.560	0.38
237VL-BK & VH-BK	0.50	5.00	6.00	4.31	1.87	1.94	0.406	0.56	4.88	0.94	0.500	0.38
262VL-BK & VH-BK	0.31	6.38	7.00	4.84	1.94	1.94	0.406	0.63	5.75	1.06	0.562	0.38
300VL-BK & VH-BK	0.50	7.00	8.00	8.00	1.94	1.94	0.468	1.00	6.00	1.13	0.562	0.38
325VL-BK & VH-BK	0.75	7.50	9.00	4.95	1.56	2.69	0.468	1.44	6.13	1.25	0.562	0.38

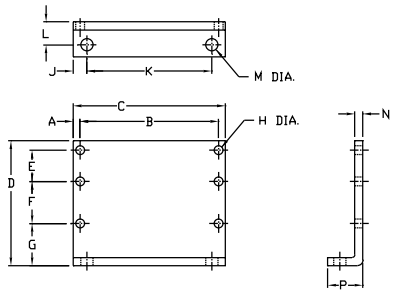

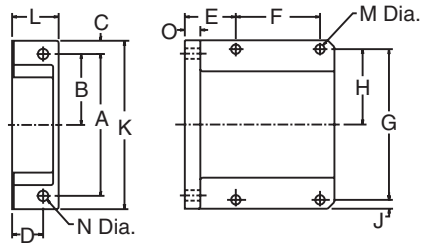

Dimensions (Inches) for Vertical Low Base Kit (375 - 600)

Part Number	A	B	C	D	E	F	G	H	J	K	L	M	N	O
375VL-BK	8.00	4.00	0.75	1.75	2.88	4.75	8.50	4.25	0.50	9.50	2.63	0.531	0.594	0.88
450VL-BK	9.56	4.78	0.66	1.50	2.16	5.81	9.56	4.78	0.66	10.88	2.50	0.687	0.687	0.88
516VL-BK	10.00	5.00	1.25	2.13	3.47	5.82	11.00	5.50	0.75	12.50	3.44	0.687	0.781	1.00
600VL-BK	11.75	5.88	1.50	2.19	3.94	6.38	12.75	6.38	1.00	14.75	3.38	0.687	0.906	1.13

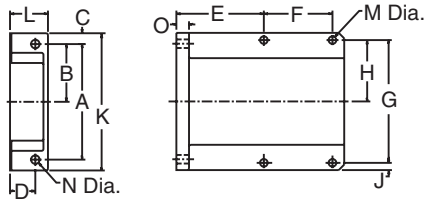

Dimensions (Inches) for Vertical High Base Kit (375 - 600)

Part Number	A	B	C	D	E	F	G	H	J	K	L	M	N	O
375VH-BK	8.00	4.00	0.75	1.75	4.63	4.75	8.50	4.25	0.50	9.50	2.63	0.531	0.594	0.88
450VH-BK	9.56	4.78	0.66	1.50	5.66	5.81	9.56	4.78	0.66	10.88	2.50	0.687	0.687	0.88
516VH-BK	10.00	5.00	1.25	2.13	5.72	5.82	11.00	5.50	0.75	12.50	3.44	0.687	0.781	1.00
600VH-BK	11.75	5.88	1.50	2.19	6.26	6.38	12.75	6.38	1.00	14.75	3.38	0.687	0.906	1.13

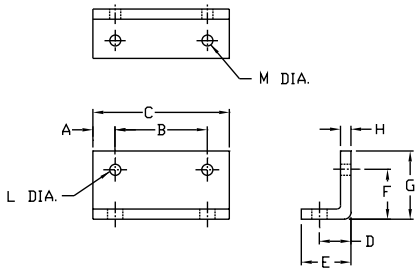

Dimensions (Inches) for Vertical "J" Base Kit (133 - 325)

Part Number	A	B	C	D	E	F	G	H	J	L	M
133VJ-BK	0.38	2.00	2.75	0.88	1.38	1.31	1.75	0.25	2.00	0.34	0.38
154VJ-BK	0.38	2.75	3.50	0.85	1.38	1.41	2.00	0.25	2.75	0.34	0.44
175VJ-BK	0.38	2.75	3.50	0.85	1.38	1.41	2.00	0.25	2.75	0.34	0.44
206VJ-BK	0.52	2.88	4.00	1.12	1.69	1.44	2.00	0.38	2.62	0.41	0.560
237VJ-BK	0.56	2.88	4.00	1.13	1.69	1.56	2.06	0.38	2.88	0.41	0.500
262VJ-BK	0.81	3.38	5.00	1.19	1.81	1.81	2.50	0.38	3.38	0.41	0.562
300VJ-BK	1.00	4.00	6.00	1.25	1.88	2.12	2.75	0.38	3.88	0.47	0.562
325VJ-BK	1.00	4.00	6.00	1.25	1.88	1.88	2.50	0.38	3.88	0.47	0.562

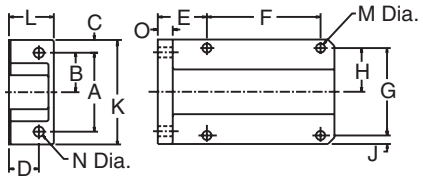

Dimensions (Inches) for Vertical "J" Base Kit (375- 600)

Part Number	A	B	C	D	E	F	G	H	J	K	L	M	N	O
375VJ-BK	4.75	2.38	0.75	1.44	1.75	8.50	4.75	2.38	0.75	6.25	2.31	0.531	0.594	0.88
450VJ-BK	5.81	2.91	0.79	1.50	2.60	9.56	5.81	2.91	0.79	7.38	2.50	0.687	0.687	0.88
516VJ-BK	5.81	2.91	0.79	1.88	2.25	11.00	5.82	2.91	0.78	7.38	2.81	0.687	0.781	1.00

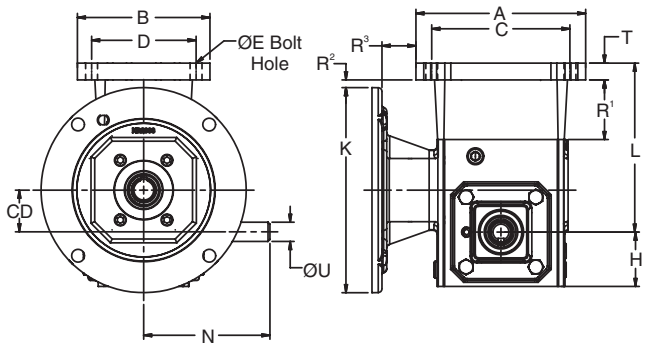

Dimensions (Inches) for Base Kit/Riser Kit

Base Kit	Riser Block Kit	C.D.	C-Face	R¹	R²	R³	T	A	B	C	D	E	K	H	L	N	U
133S-BK	**133R-BK**	1.33	56/140	1.89	0.24	1.07	0.53	5.38	4.20	4.38	3.31	0.38	6.50	1.72	5.35	4.00	0.62
154S-BK	**154R-BK**	1.54	56/140	1.55	0.23	0.97	0.59	6.44	5.46	5.25	4.52	0.44	6.50	1.91	5.61	4.31	0.75
175S-BK	**175R-BK**	1.75	56/140	1.61	0.30	0.57	0.69	7.00	5.56	5.75	4.50	0.44	6.50	2.06	5.99	4.31	0.88
206S-BK	**206R-BK**	2.06	56/140	1.42	0.20	0.57	0.72	7.70	5.76	6.38	4.69	0.50	6.50	2.28	6.23	4.72	1.00
237S-BK	**237R-BK**	2.37	56/140	2.69	1.51	0.50	0.75	8.50	6.20	7.06	4.88	0.50	6.50	2.50	7.88	5.08	1.13
262S-BK	**262R-BK**	2.62	56/140 180	2.40	1.59 0.34	0.59 0.72	0.75	9.26	6.50	8.00	5.25	0.56	6.50 9.00	2.93	8.22	5.63	1.13
300S-BK	**300R-BK**	3.00	56/140 180	2.12	1.50 0.25	0.11 0.58	0.88	10.16	7.36	8.44	588	0.56	6.50 9.00	3.25	8.63	6.75	1.25
325S-BK	**325R-BK**	3.25	56/140 180	1.87	1.25 0	0.82 0.65	0.88	11.14	7.76	9.50	6.13	0.56	6.50 9.00	3.50	8.63	7.06	1.38
375S-BK	**375R-BK**	3.75	56/140 180	1.77	1.2 0.08	0.53	0.94	12.00	8.63	10.38	7.00	0.59	6.76 9.00	3.88	9.27	7.75	1.63
450S-BK	**450R-BK**	4.50	140 180/215	2.27	1.83 0.71	0.28	1.12	13.88	9.33	12.12	7.63	0.66	6.76 9.00	4.50	10.83	8.44	1.63
516S-BK	**516R-BK**	5.16	180/215	2.01	0.78	-	1.12	16.38	10.37	14.13	8.37	0.78	9.00	5.31	11.57	9.06	2.00