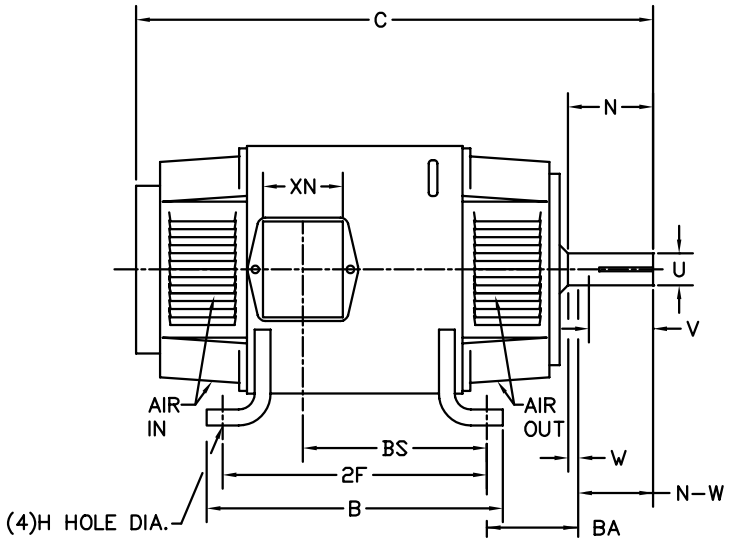

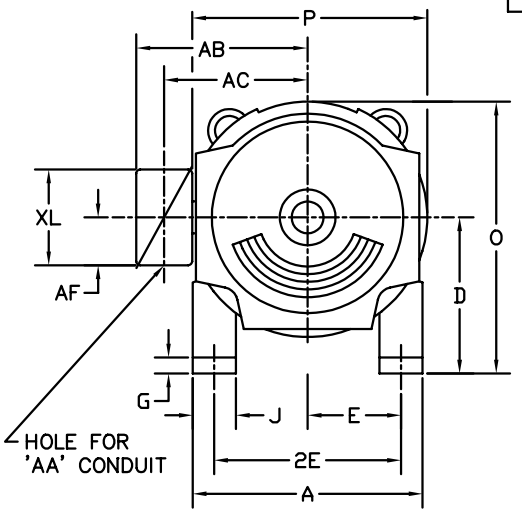

	FOOT MOUNTING						D.E. SHAFT EXTENSION					DRIVE KEY		FRAME					
FRAME	BA	E	2F	G	H	J	N	N-W	U	V	W	KEY-SQ.	KEY-LONG	A	B	C	D	O	P
1810AT	2.75	3.75	11.00	.38	.406	1.50	2.90	2.77	1.125 [1]	2.50 [3]	.13	.250	1.38	8.75	12.25	21.46	4.50 [2]	9.00	9.00
219AT	3.50	4.25	11.00	.50	.406	2.00	3.00	2.75	1.375 [1]	2.50 [3]	.25	.312	1.75	10.38	12.00	24.50	5.25 [2]	10.47	10.44
258AT	4.25	5.00	12.50	.69	.531	2.25	3.44	3.25	1.625 [1]	3.00 [3]	.19	.375	2.31	12.38	14.00	26.50	6.25 [2]	12.47	12.44
259AT	4.25	5.00	14.00	.69	.531	2.25	3.44	3.25	1.625 [1]	3.00 [3]	.19	.375	2.31	12.38	15.50	28.00	6.25 [2]	12.47	12.44
288AT	4.75	5.50	14.00	.69	.531	2.50	3.91	3.75	1.875 [1]	3.50 [3]	.16	.500	2.50	13.81	15.62	32.00	7.00 [2]	13.88	13.75
328AT	5.25	6.25	16.00	.81	.656	3.00	4.40	4.25	2.125 [1]	4.00 [3]	.15	.500	3.12	15.88	17.75	34.63	8.00 [2]	15.94	15.88
329AT	5.25	6.25	18.00	.81	.656	3.00	4.40	4.25	2.125 [1]	4.00 [3]	.15	.500	3.12	15.88	19.75	36.63	8.00 [2]	15.94	15.88

	CONDUIT BOX							APPROXIMATE WEIGHT
FRAME	AA	AB	AC	AF	BS	XL	XN	
1810AT	3/4NPT	INTEGRAL WITH ENDPLATE						195
219AT	3/4-1	7.91	6.44	2.44	9.38	3.81	3.12	260
258AT	1-1/4	9.35	7.72	2.94	9.75	4.94	4.00	366
259AT	1-1/4	9.35	7.72	2.94	11.25	4.94	4.00	411
288AT	1-1/4	11.88	9.25	5.00	12.64	7.88	5.25	566
328AT	2	12.94	10.32	5.00	13.68	7.88	5.25	775
329AT	2	12.94	10.32	5.00	15.68	7.88	5.25	884

1) SHAFT DIAMETERS TO 1.500 TOLERANCE +.0000 -.0005
   SHAFT DIAMETERS ABOVE 1.500 TOLERANCE +.0000 -.0010
   SHAFT DIAMETERS TO 1.625 RUNOUT .002 T.I.R. MAX.
   SHAFT DIAMETERS ABOVE 1.625 RUNOUT .003 T.I.R. MAX.
2) 'D' DIMENSION TOLERANCE +.000 - .030
3) 'V' DIMENSION IS MAX. HUB LENGTH ON SHAFT
4) CONDUIT BOX CAN BE ROTATED IN 90° STEPS ON ITS OWN AXIS.
5) ALL DIMENSIONS NOT NOTED ARE NOMINAL DIMENSIONS CONSULT FACTORY FOR TOLERANCES.

FOR F1 OR F2 CONDUIT BOX LOCATION SEE SALES ORDER

MATL: -

REV:		
C	CORRECTED "A" DIMENSIONS	

9841	SCALE: 0.08	BY: TBM	REVISED: 09/10/96
	FILE: CHB00003091		TDR: 0104915

BALDOR ELECTRIC Co.

DIM SHEET, 1810AT THRU 329AT GENERATORS

1486