12LYH727

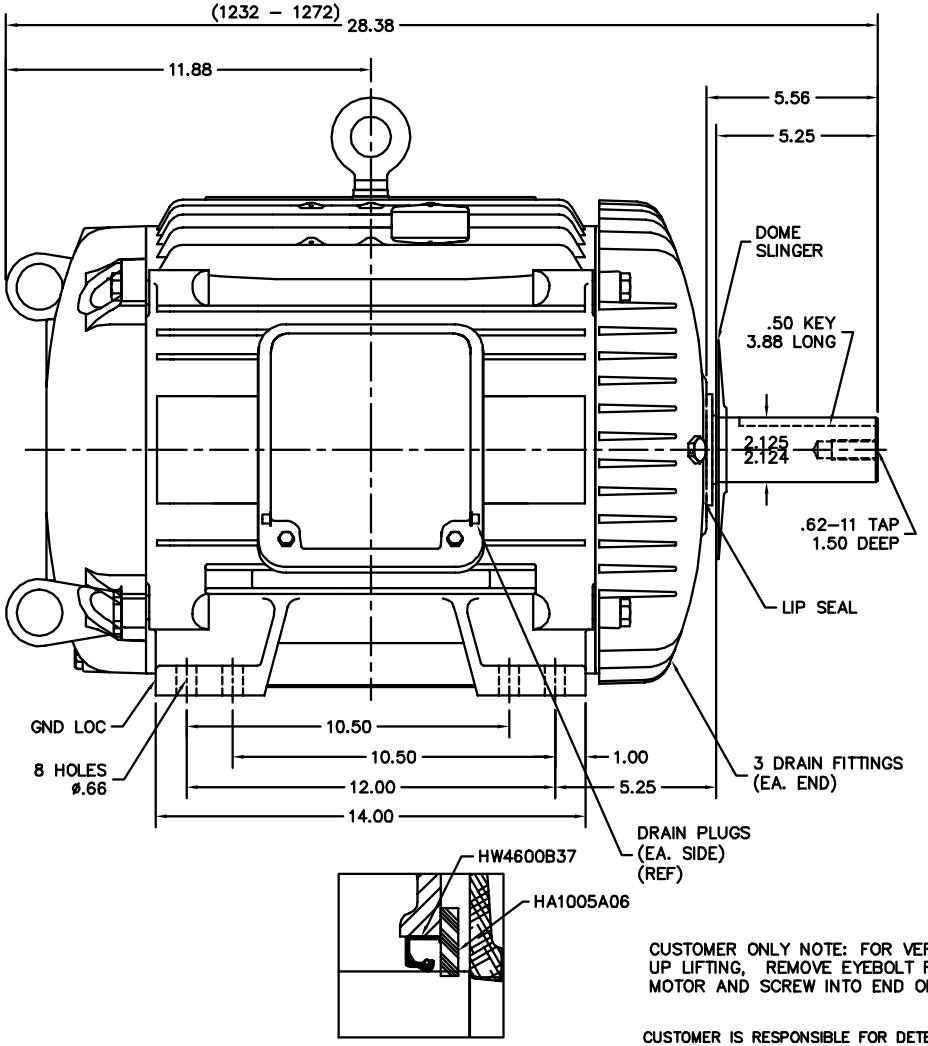

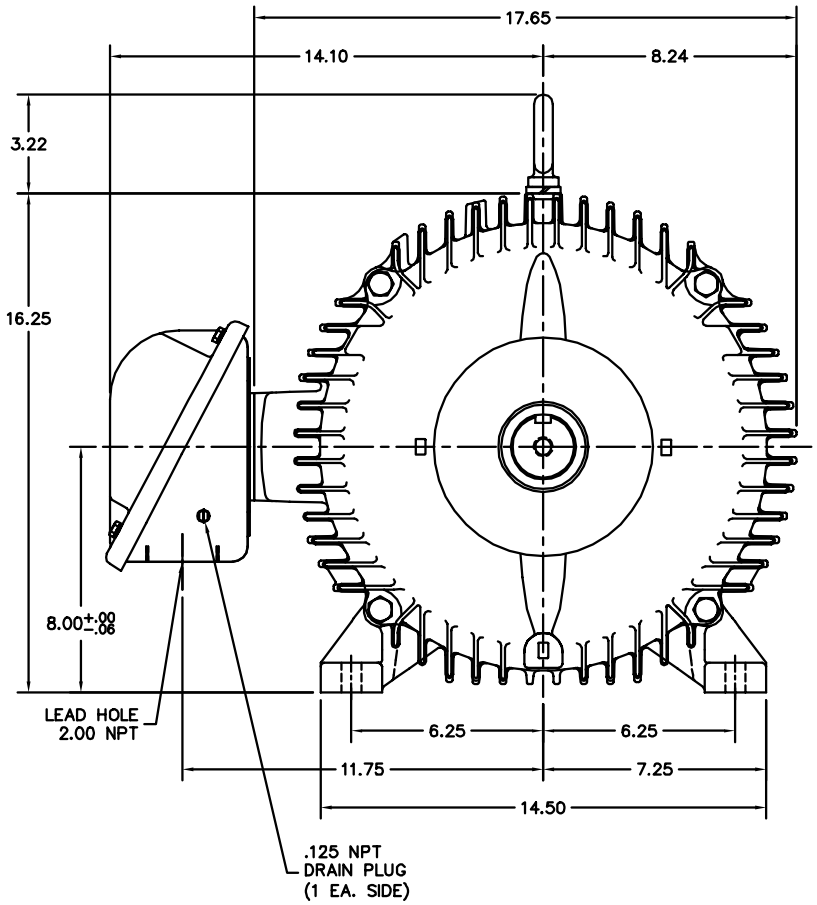

CUSTOMER ONLY NOTE: FOR VERTICAL SHAFT UP LIFTING, REMOVE EYEBOLT FROM TOP OF MOTOR AND SCREW INTO END OF SHAFT.

CUSTOMER IS RESPONSIBLE FOR DETERMINING THAT BALDOR'S PRODUCT WILL PERFORM SUITABLY IN THE INTENDED APPLICATION.

REV. DESC: REMOVE LOCKNUT		
REV. LTR: A	VERSION: 01	TDR: 000000957007
FILE: \AAA\00220\831	REVISED: 02:37:31 12/11/2015	BY: ENMARSO
MTL: –		

BALDOR

HOR TEAO 324–6T CP COOLING TOWER,SLD BRGS,SEAL,DOME,VER LIFT

SH 1 of 1

12LYH727