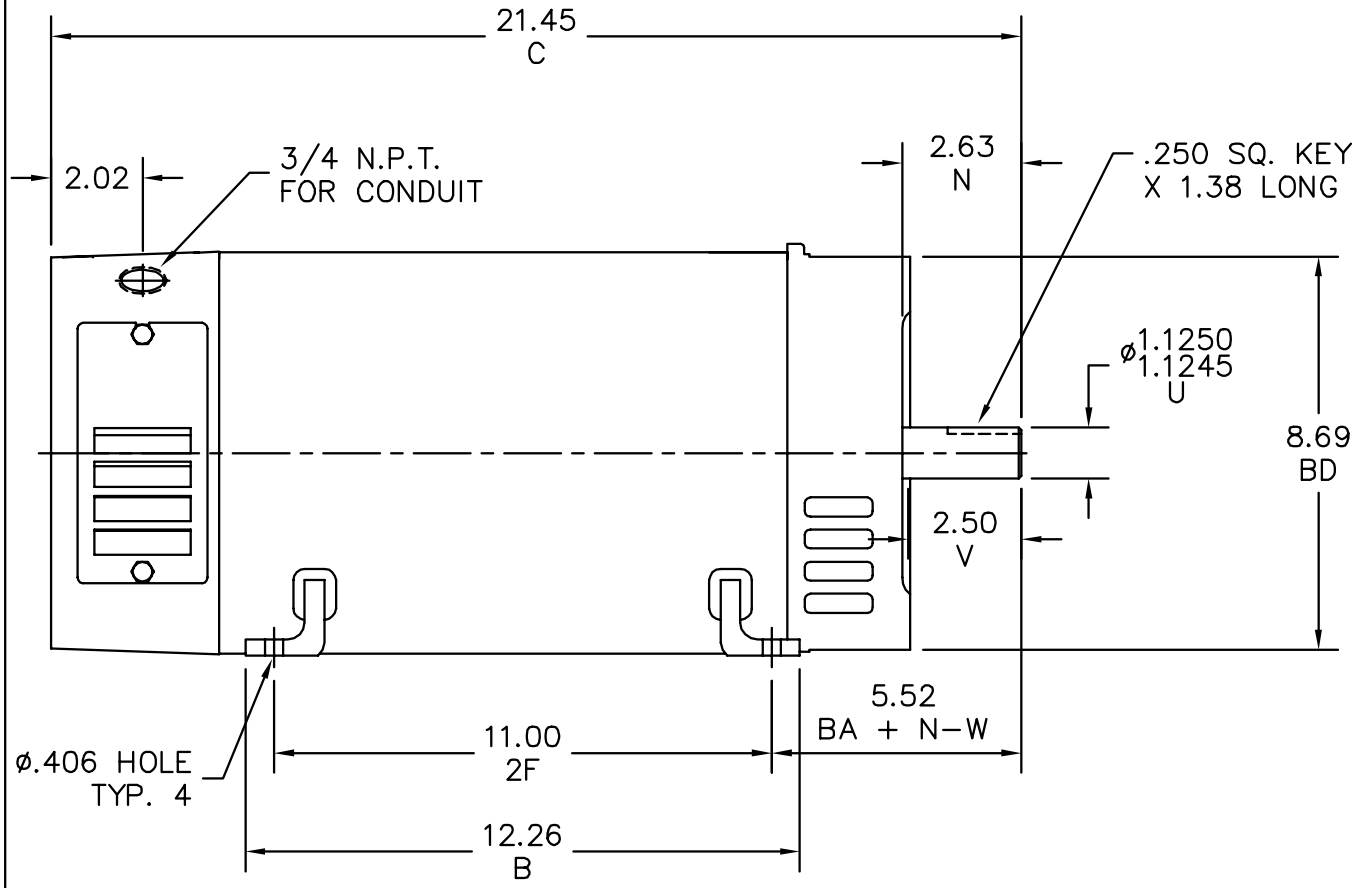

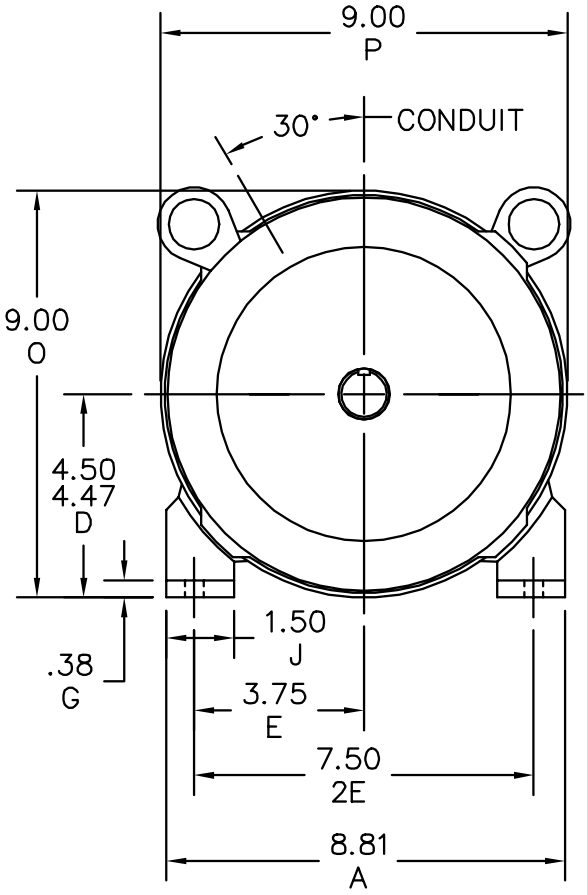

SHAFT RUNOUT .002 T.I.R. MAX.

"V" DIMENSION IS MAX. HUB LENGTH ON SHAFT.

APPROX. WEIGHT: 195 LB.

ALL DIMENSIONS NOT NOTED ARE NOMINAL DIMENSIONS
CONSULT FACTORY FOR TOLERANCES.

CUSTOMER IS RESPONSIBLE FOR DETERMINING THAT BALDOR'S PRODUCT WILL PERFORM SUITABLY IN THE INTENDED APPLICATION.

REV. DESC: CHANGE KEYWAY FROM 1.75 TO 1.38 LONG			BALDOR • DODGE • RELIANCE
REV. LTR: B	VERSION: 02	TDR: 000000531849	
FILE: \RGG\00005\857		REVISED: 03:06:04 03/05/2010	1810AT,GENERATOR,DPFG
MTL: –		BY: RGGWT	SH 1 of 1

1486–2