## Sleeve Bearings—Babbitted

### 1-15/16″ THRU 8″ ANGLE BABBITTED PILLOW BLOCKS

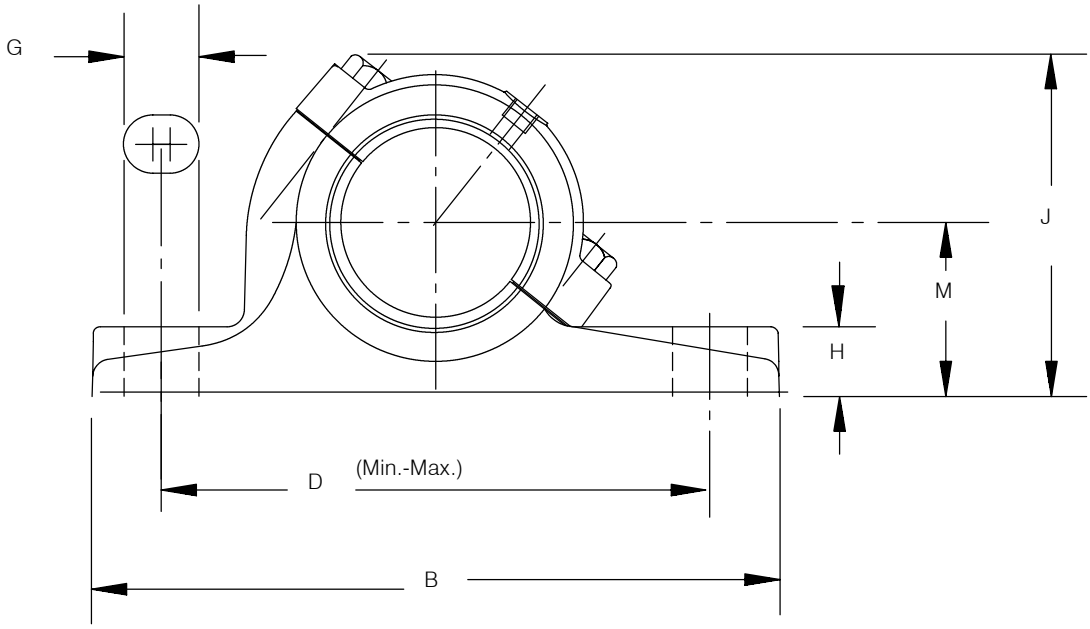


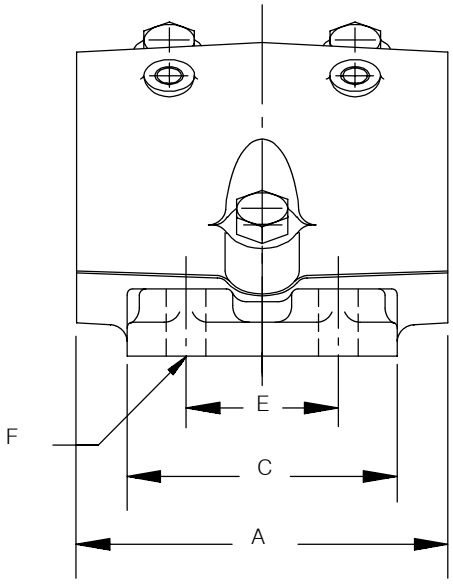



| FEATURES/BENEFITS PAGE B11–2 | HOW TO ORDER/ NOMENCLATURE PAGE B11–4 | SELECTION PAGE B11–10 | |
|---|---|---|---|

# Sleeve Bearings—Babbitted

## 1-15/16″ THRU 8″ ANGLE BABBITTED PILLOW BLOCKS

| Shaft Size | Part Number | Description | Wt. | Used on Frame | A | B | C | D | |
|---|---|---|---|---|---|---|---|---|---|
| | | | | | | | | Min. | Max. |
| 1-15/16 | **230050** | P4B-BAA-115 | 11 | HD-200 | 4 | 8-1/4 | 3-1/2 | 6-5/16 | 6-11/16 |
| 2-3/16 | **230053** | P4B-BAA-203 | 14 | HD-200 | 4-1/2 | 8-1/2 | 3-1/2 | 6-9/16 | 6-15/16 |
| 2-7/16 | **230056** | P4B-BAA-207 | 20 | HD-200 | 5 | 10-1/4 | 4 | 7-11/16 | 8-5/16 |
| 2-11/16 | **230059** | P4B-BAA-211 | 24 | HB-250 | 5-1/2 | 10-1/2 | 4-1/4 | 7-15/16 | 8-9/16 |
| 2-15/16 | **230062** | P4B-BAA-215 | 28 | HD-250 | 6 | 11 | 4-1/2 | 8-7/16 | 9-1/16 |
| 3-7/16 | **230065** | P4B-BAA-307 | 47 | HD-300 | 7 | 13 | 5 | 10-1/16 | 10-15/16 |
| 3-15/16 | **230068** | P4B-BAA-315 | 61 | HD-350 | 8 | 14-3/4 | 5-1/2 | 11-7/16 | 12-9/16 |
| 4-7/16 | **230071** | P4B-BAA-407 | 84 | HD-400 | 9 | 16-9/16 | 6-5/16 | 12-15/16 | 14-1/16 |
| 4-15/16 | **230074** | P4B-BAA-415 | 112 | HD-400 | 10 | 18 | 7 | 14-5/16 | 15-11/16 |
| 5-7/16 | **230077** | P4B-BAA-507 | 154 | HD-500 | 11 | 19-3/4 | 8 | 15-1/16 | 16-7/16 |
| 5-15/16 | **230080** | P4B-BAA-515 | 184 | HD-500 | 12 | 20-1/2 | 8-1/2 | 15-13/16 | 17-3/16 |
| 6-1/2 | **230134** | P4B-BAA-608 | 220 | ... | 13 | 22 | 9-5/8 | 17-3/16 | 18-13/16 |
| 7 | **230137** | P4B-BAA-700 | 275 | ... | 14 | 23 | 10 | 18-1/4 | 19-3/4 |
| 8 | **230140** | P4B-BAA-800 | 400 | ... | 16 | 26 | 11 | 20-11/16 | 22-5/16 |

| Shaft Size | E | F Bolt | G | H | J | M | Grease Cups # | | |
|---|---|---|---|---|---|---|---|---|---|
| | | | | | | | Pipe Tap | No. Reqd | Size |
| 1-15/16 | 1-3/4 | 1/2 | 3/4 | 7/8 | 4-11/16 | 2-1/4 | 1/4 | 1 | 1 |
| 2-3/16 | 1-3/4 | 1/2 | 3/4 | 1 | 5-1/8 | 2-1/2 | 3/8 | 1 | 2 |
| 2-7/16 | 2 | 5/8 | 1 | 1-1/8 | 5-9/16 | 2-3/4 | 3/8 | 1 | 2 |
| 2-11/16 | 2-1/4 | 5/8 | 1 | 1-1/4 | 5-7/8 | 3 | 3/8 | 1 | 2 |
| 2-15/16 | 2-1/2 | 5/8 | 1 | 1-3/8 | 6-3/8 | 3-1/4 | 3/8 | 1 | 2 |
| 3-7/16 | 2-3/4 | 3/4 | 1-1/4 | 1-1/2 | 7-1/8 | 3-1/2 | 1/2 | 1 | 3 |
| 3-15/16 | 3 | 3/4 | 1-3/8 | 1-21/32 | 7-1/2 | 3-3/4 | 1/2 | 1 | 4 |
| 4-7/16 | 3-1/2 | 7/8 | 1-1/2 | 1-3/4 | 8-1/2 | 4-1/8 | 1/2 | 1 | 4 |
| 4-15/16 | 4 | 7/8 | 1-5/8 | 1-7/8 | 9-3/16 | 4-1/2 | 1/2 | 1 | 4 |
| 5-7/16 | 4-1/2 | 1-1/8 | 1-7/8 | 2 | 10-1/4 | 5 | 1/2 | 2 | 3 |
| 5-15/16 | 5 | 1-1/8 | 1-7/8 | 2-1/8 | 11-1/16 | 5-1/2 | 1/2 | 2 | 3 |
| 6-1/2 | 5-1/2 | 1-1/8 | 2 | 2-1/4 | 12-1/8 | 6 | 1/2 | 2 | 4 |
| 7 | 6 | 1-1/8 | 2 | 2-3/8 | 13 | 6-1/2 | 1/2 | 2 | 4 |
| 8 | 6-3/4 | 1-3/8 | 2-1/4 | 2-1/2 | 14-1/16 | 7 | 1/2 | 2 | 4 |

# Grease cups or pressure fittings may be obtained thru our distributors; one required per bearing up thru 4-15/16″ sizes and two required for balance of sizes.

Note: 1–15/16 – 3–7/16” sizes have 2 cap bolts.
3–3/16 – 5–15/16” have 3 cap bolts (shown in diagram).
6–1/2” and larger sizes have 4 cap bolts.

FEATURES/BENEFITS PAGE B11–2 | HOW TO ORDER/ NOMENCLATURE PAGE B11–4 | SELECTION PAGE B11–10