06LYF551

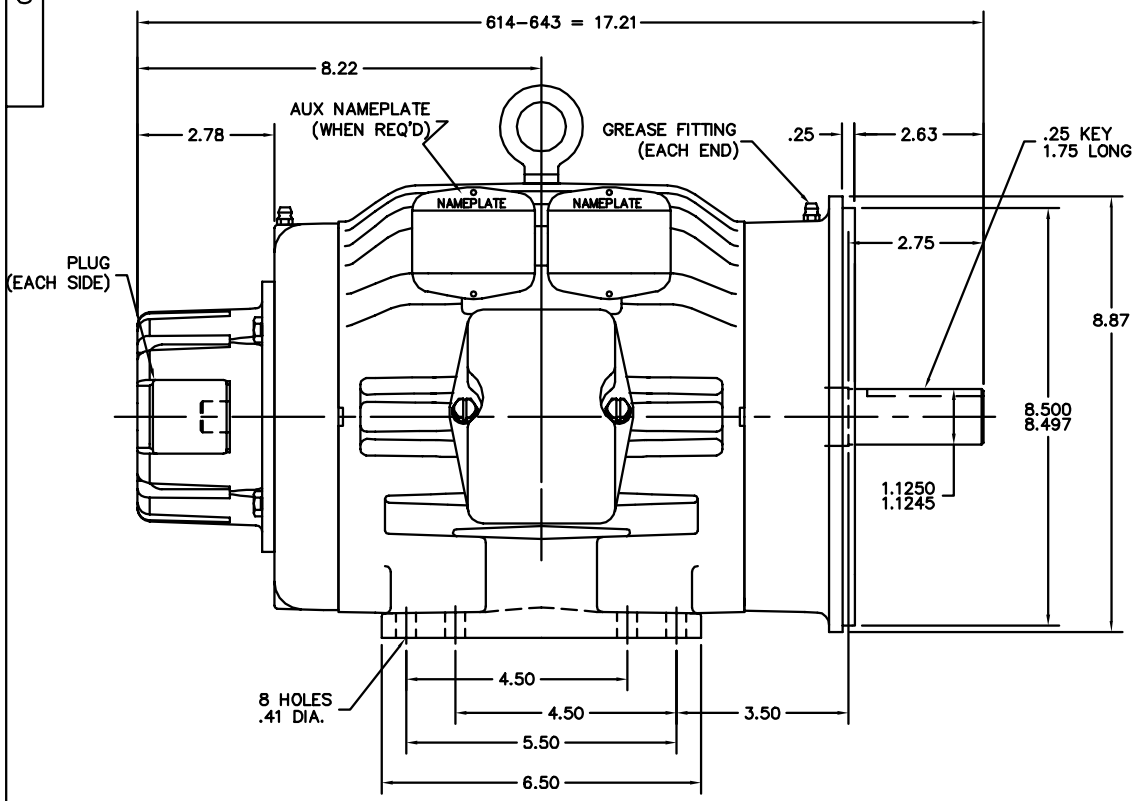

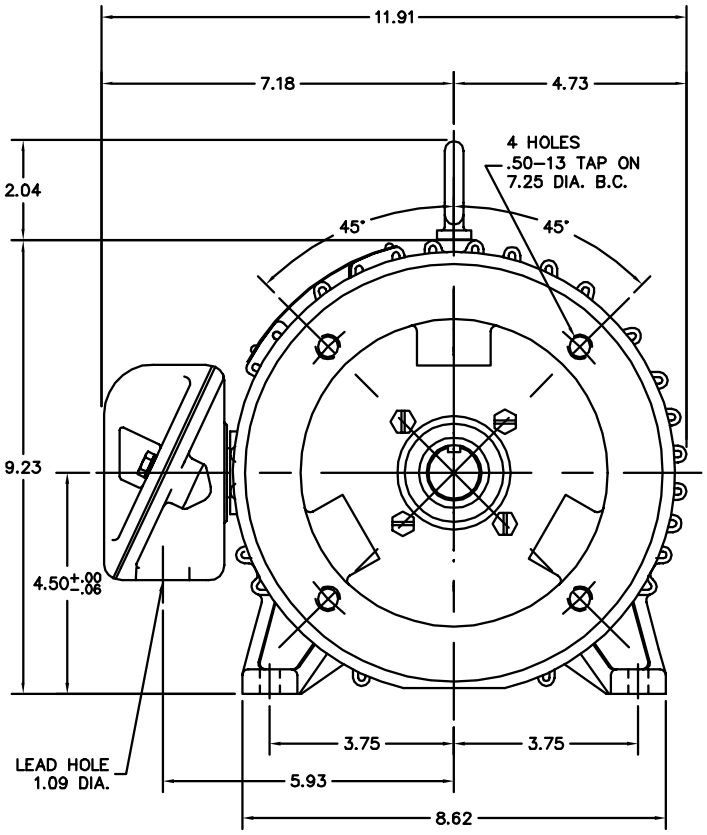

06LYF551

CUSTOMER IS RESPONSIBLE FOR DETERMINING THAT BALDOR'S PRODUCT WILL PERFORM SUITABLY IN THE INTENDED APPLICATION.

REV. DESC: ADD GRAPHICS FOR 2 AUX NAMEPLATE		
REV. LTR: E	VERSION: 02	TDR: 000001027670
FILE: \AAA\00070\951	REVISED: 12:56:58 05/09/2017	BY: USZAHAR
MTL: –		

BALDOR

STD HORZ 182–4TC TENV INVERTER (THRU–SHAFT ENCODER)

SH 1 of 1

06LYF551