COMPOUND WOUND

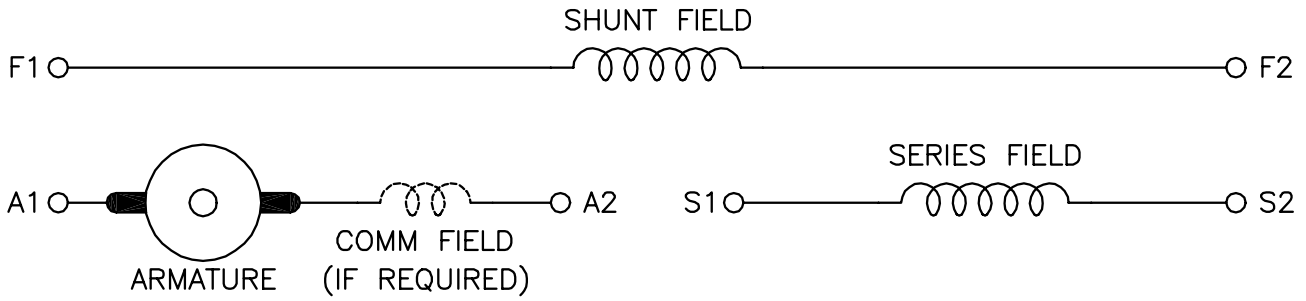

DIRECTION OF ROTATION			
CWDE		CCWDE	
POS TERM (+)	NEG TERM (−)	POS TERM (+)	NEG TERM (−)
A1	S2	A2	S2
F1	F2	F1	F2
CONNECT A2 & S1		CONNECT A1 & S1	

NOTES:

1. LIMIT STARTING INRUSH CURRENT TO NOT MORE THAN 3 TIMES RATED AMPERES BY ENERGIZING THE FULL SHUNT FIELD BEFORE BRINGING THE ARMATURE VOLTAGE UP SLOWLY OR IN STEPS.
2. OPTIONAL FIELD REOSTAT MAY BE CONNECTED IN SERIES WITH THE SHUNT FIELD.
3. OPTIONAL THERMOSTAT LEADS ARE MARKED J,J.

CD0862B01

REV. DESC: NEW, REPLACE CD0862			
REV. LTR: –	BY: JLP	REVISED: 16:10:51 11/03/2004	TDR: 347796
CD0862B01		FILE: AAA00121482	REF: CD0862B01
		MTL: –	

BALDOR ELECTRIC Co.

DC CONNECTION DIAGRAM, COMPOUND FIELD, 6 LEAD