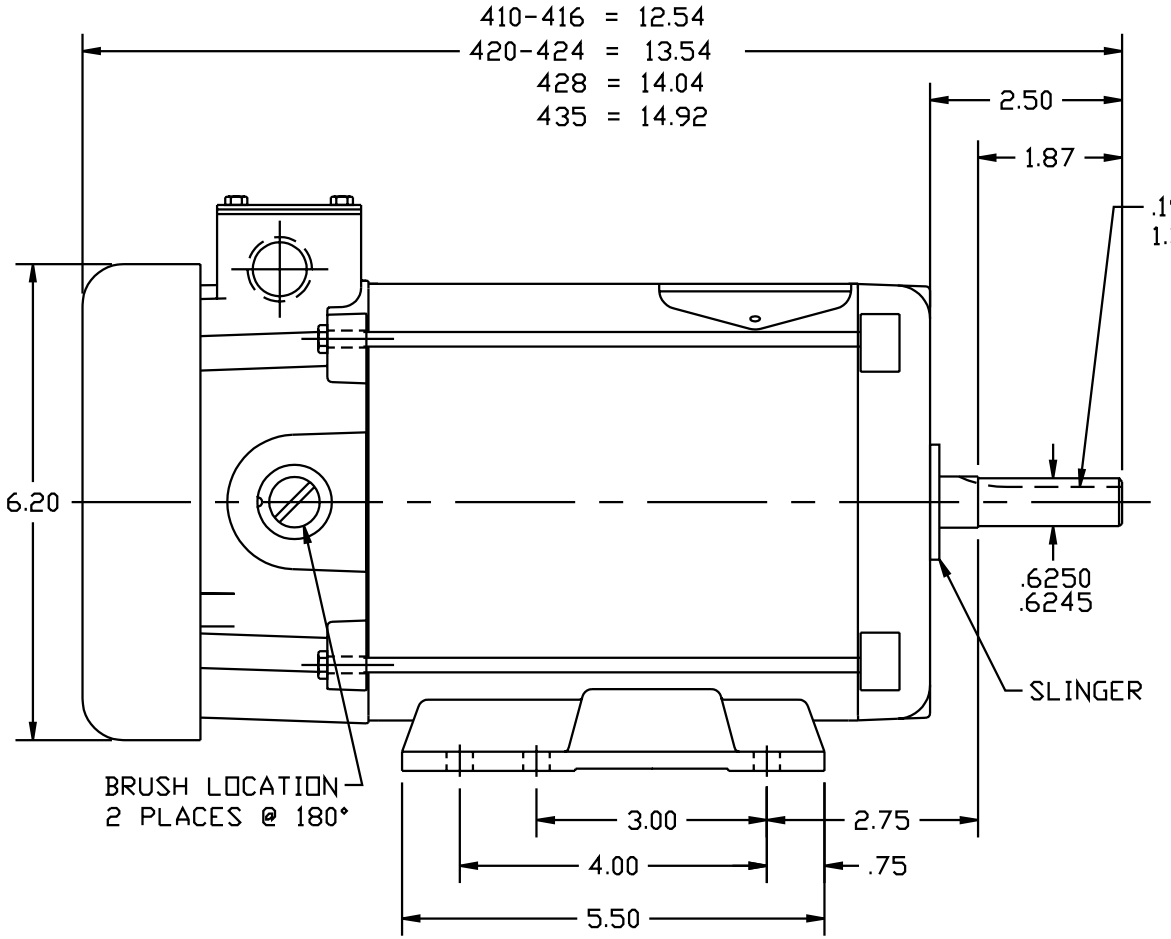

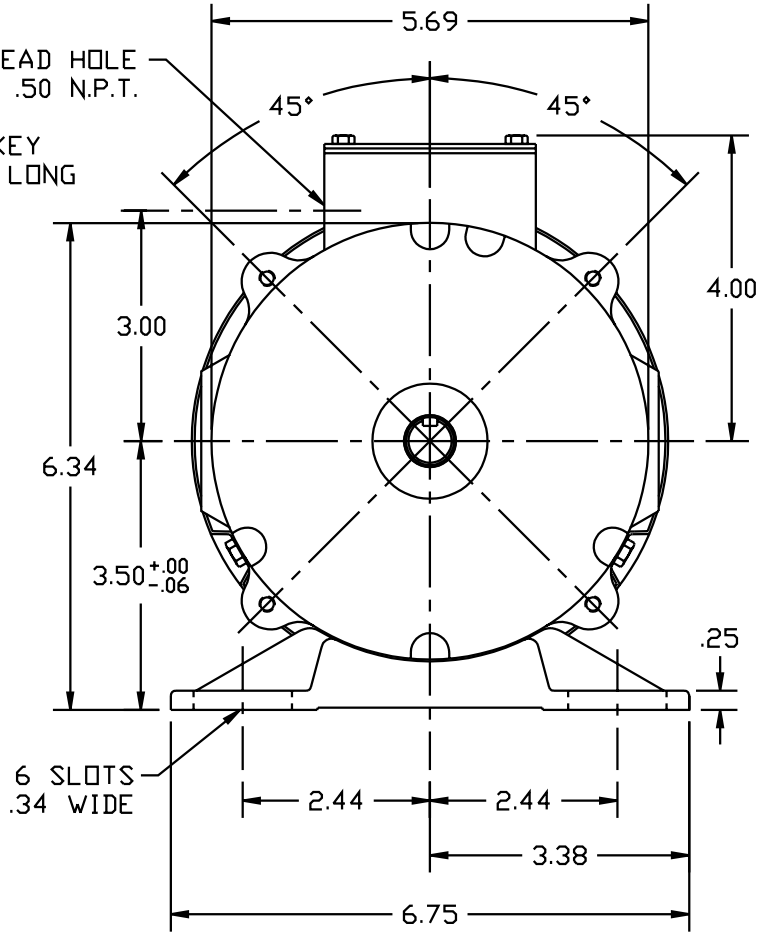

MATL: –				
REV:	D	LOADED TO ACAD		
34-6121	REF: 34-6099	BY: TDJ	REVISED: 08/09/95	
	FILE: AAA00022425		TDR: 0064848	

BALDOR ELECTRIC Co.

STD. HORZ 34DC NEMA 56 TEFC S/P 14-2 WEATHERPROOF

34-6121