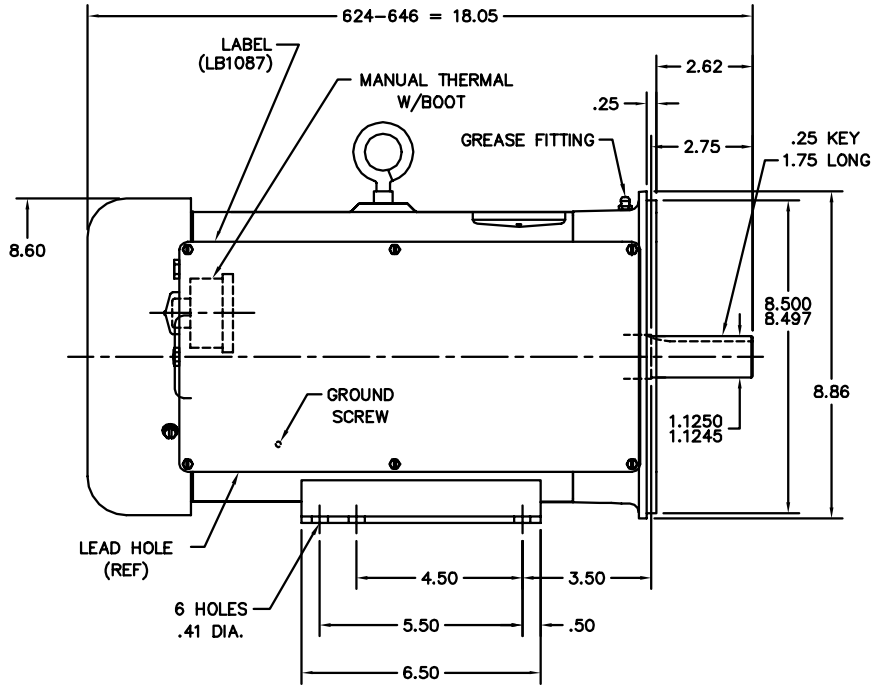

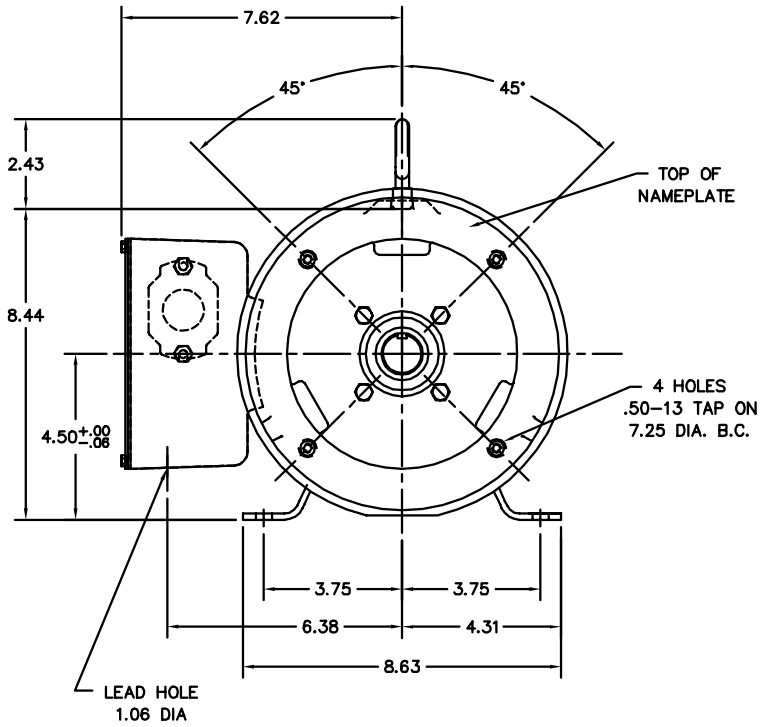

CUSTOMER IS RESPONSIBLE FOR DETERMINING THAT BALDOR'S PRODUCT WILL PERFORM SUITABLY IN THE INTENDED APPLICATION.

REV. DESC: CHANGE STACK FROM 640–646 TO 624–646 TO MATCH BAND			BALDOR - RELIANCE®
REV. LTR: V	VERSION: 03	TDR: 000001079436	
FILE: \AAA\00012\618	REVISED: 04:00:44 07/26/2018	BY: ENALEM0	HORZ 182–4TC TEFC 36LC W/TYPE LE–MTO
MTL: –			SH 1 of 1

36LYF189