B109144

Motor Wiring Diagram

9 Lead, Dual Voltage (WYE Conn.)

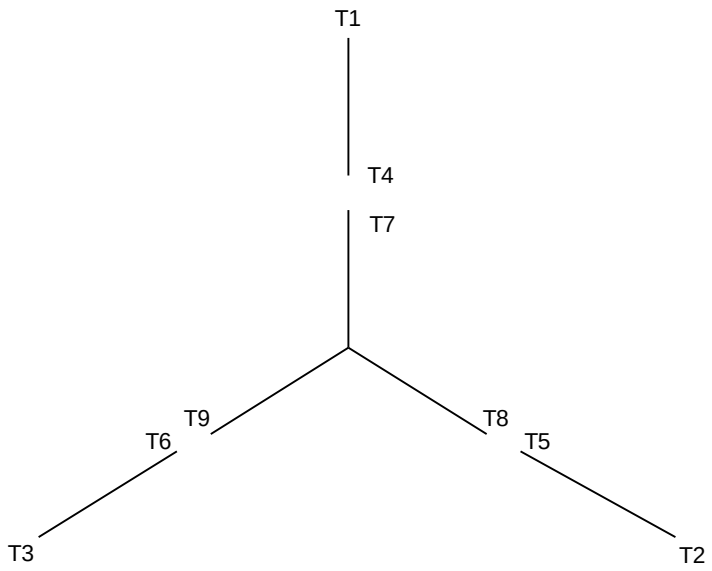

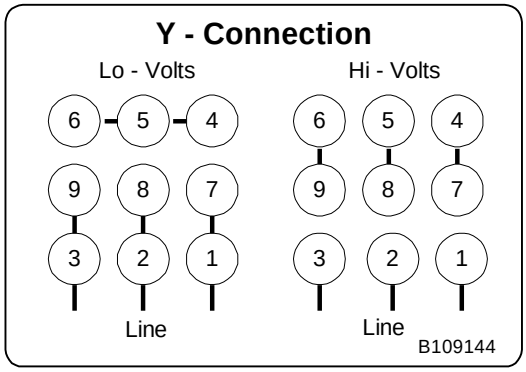

To reverse direction of rotation interchange connections L1 and L2.

Each lead may have one or more cables comprising that lead.
In such case each cable will be marked with the appropriate lead number.

Connection Plate: B109144
Connection Decal: 344136