Pfannenberg
ELECTRO-TECHNOLOGY FOR INDUSTRY

EB 250- 1600 Chillers

Installation, Operation and Service Manual



SHARING COMPETENCE

Protecting man, machine and the environment®

USER'S QUICK GUIDE

Units in the EB 250 -1600 range are equipped with an electronic controller that manages correct operation of the chiller on the basis of signals read on the analog and digital inputs.
This quick guide contains a list of the main functions of the electronic board. For more detailed information consult Chapter 7 "Electronic controller".

0.1 Unit start/stop

The unit can be switched on and off as follows:

- From the keypad (local or remote)
- From a digital input configured as remote ON/OF

NOTE

In case of a power loss, when power is restored the unit will be ON if it was ON at the time of power loss, and OFF if it was OFF.

0.1.1 Start from the keypad

From unit OFF (stand-by) press and release button ❄ to switch the unit on or off in chiller mode. Unit is on when LED ❄ is lit.
Stand-by mode is set each time the unit is switched off from chiller operating mode. Also in stand-by the controller makes it possible to:

- Display the measured values.
- Manage the alarm situation by displaying and signaling active alarms.

When the unit is in stand-by the controller shows the label 5(.W on the display.



0.1.2 Start-up from a digital input

The unit can be switched on/off from a digital input configured as remote On/OFF.
The power-off command (local or remote) always assumes priority with respect to the power-on command. If the unit is powered-off with a local command it must be powered back on with a local command.
When the unit is in OFF status from a digital input the controller shows the label DF.F on the display.



For details concerning the connection, refer to the electrical diagram.

The data in this manual are not binding and they can be modified by the manufacturer without notice. **Reproduction of this manual is strictly prohibited**

0.2 Setpoint

0.2.1 Display the setpoint

To display the setpoint press and release the SET key.
With the unit in stand-by the lower display will show **SetC** (chiller set).
The upper display will show the set value.

0.2.2 Change the setpoint

To change the unit working setpoint press the SET key for at least 3 seconds and the working setpoint **SetC** (chiller set) will appear in flashing mode.

The setpoint can be changed using the ▲ or ▼ buttons.

To save the new setpoint, press SET or wait for the time-out to exit programming mode.

0.3 Alarms display and reset

ATTENTION

With this procedure you can reset all the alarms except for the compressor thermal cut-out alarms for which the password will be required: 14.

To open the functions menu proceed as follows:

- Open the functions menu by pressing the button menu
- With the ▲ or ▼ buttons select the **ALrM** function
- Press SET.
  If no alarms are present, pressing button SET is not enabled.
- The lower display shows the label with the alarm code; the upper display, if the alarm displayed is resettable, shows the label **rSt** or **no** if the alarm condition is still present.
- Pressing SET in correspondence with label **rSt** resets the alarm and the system goes to the next one; if this too is resettable, press SET to reset it and go to the next one.
- If you want to scroll through all the alarms present press ▲ or ▼.

To exit the **ALrM** function and return to normal display mode press menu or wait for the time-out.

With the unit in **StbY** (stand-by) and the E LED flashing, press menu and scroll with buttons ▲ or ▼ to select the **ALrM** function and press button SET to display the active alarm.

NOTE
To reset the compressor thermal alarms refer to the specific heading.

The data in this manual are not binding and they can be modified by the manufacturer without notice. **Reproduction of this manual is strictly prohibited**

TABLE OF CONTENTS

USER'S QUICK GUIDE 1
0.1 Unit start/stop 1
0.1.1 Start from the keypad 1
0.1.2 Start-up from a digital input 1
0.2 Setpoint 2
0.2.1 Display the setpoint 2
0.2.2 Change the setpoint 2
0.3 Alarms display and reset 2
TABLE OF CONTENTS 3
GENERAL INFORMATION 6
1.1 How to interpret the model 7
SAFETY 8
2.1 General 8
2.2 User circuit liquids 8
2.3 Lifting and transport precautions 9
2.4 Precautions to be adopted during installation 10
2.5 Precautions to be adopted during operation 10
2.6 Maintenance precautions 11
2.7 Refrigerant gases 12
2.7.1 Refrigerants safety datasheet 12
TECHNICAL DATA 14
3.1 Data for standard units 15
3.1.1 Dimensions 15
3.1.2 Characteristics of pumps and fans 15
3.1.3 Sound level measurements 16
DESCRIPTION 17
4.1 Components 17
4.1.1 Refrigerant circuit 17
4.2 Compressors 17
4.3 Condenser 18
4.4 Evaporator 18
4.5 Tank 18
4.6 Pump 18
4.7 Fans 18
4.7.1 Axial 18
4.8 Cabinet 19
4.9 Materials in contact with the liquid to be cooled 19
4.10 Overall dimensions and minimum clearances with respect to walls 19
4.11 Electrical circuit 19
INSTALLATION 20
5.1 Inspection 20
5.2 Location 20
5.3 Freeze protection 21
5.3.1 Operating limits 21
5.4 Hydraulic connections 22
5.5 Expansion vessel 23
5.6 Electrical connections 24
5.7 Phase Monitor 25
STARTING 26
ELECTRONIC CONTROLLER 27
7.1 User interface 27
7.2 Function of buttons 27
7.2.1 Function of combined buttons 28
7.3 Remote terminal 28
7.4 Probes key 28
7.5 Unit start/stop 28
7.5.1 Start from the keypad 29
7.5.2 Start from a digital input 29

The data in this manual are not binding and they can be modified by the manufacturer without notice. **Reproduction of this manual is strictly prohibited**

7.6 Setpoint 29
7.6.1 Display the setpoint 29
7.6.2 Change the setpoint 29
7.7 Dynamic setpoint function 29
7.8 How to display the internal values of a circuit 30
7.9 Functions menu button “Menu” 31
7.9.1 CrEn - Enable or disable the single circuit 31
7.9.2 COEn - Enable or disable the single compressor 31
7.9.3 COSn - Display and reset the number of compressor starts 32
7.9.4 Hour - Display and reset the running hours of the loads 32
7.9.5 Cond - Display of percentage / number of condensing steps 33
7.10 uS - Tank heater probe display 33
7.11 Alarms 33
7.11.1 Alarms display and reset (ALrM function) 33
7.11.2 How to mute the buzzer 34
7.11.3 General alarms list 34
7.11.4 Indications table 35
7.11.5 Probe faulty 35
7.11.6 High pressure switch alarm (EB 250 - 900 models only) 35
7.11.7 High pressure switch alarm and/or compressor thermal alarm (EB 1200 – 1600 models only) 35
7.11.8 Low pressure switch alarm 36
7.11.9 High pressure 36
7.11.10 Low pressure 36
7.11.11 Anti-freeze alarm 36
7.11.12 Chiller mode anti-freeze alarm 36
7.11.13 Water differential pressure switch alarm 37
7.11.14 Compressors thermal alarm 37
7.11.15 Fan thermal alarm 37
7.11.16 High condensing pressure unloading indication in chiller mode 38
7.11.17 High condensing pressure recovery disabling indication in chiller mode 38
7.11.18 Evaporator inlet high water temperature unloading indication 38
7.11.19 Evaporator water pump group thermal alarm 38
7.11.20 Phase monitor alarm 38
7.11.21 Compressors maintenance alarm 39
7.11.22 Pumps maintenance alarm 39
7.11.23 EEprom alarm 39
7.11.24 Remote terminal alarm 39
7.11.25 Remote terminal alarm 39
7.11.26 Alarm relay / open - collector / buzzer notes 40
7.11.27 Display and delete the alarms log in the memory (ALOG function) 40
7.12 Programming from keypad 40
7.12.1 Access to parameters 41
7.12.2 How to change a parameter value 42
7.13 Use of the hot-key (function UPL) 42
7.13.1 Programming the board with the hot-key 42
7.13.2 Hot-key programming 42
7.14 Unit adjustment and control 42
7.14.1 Compressors control 42
7.14.2 Choice of compressors control type 42
7.14.3 Proportional control 42
7.14.4 Compressors proportional control diagram 43
7.14.5 Neutral zone control (factory setting) 43
7.14.6 Compressors rotation 43
7.14.7 Forced compressors rotation 43
7.14.8 Compressors starting time limitation 44
7.15 Unloading function 44
7.16 Fans control 44
7.16.1 Units configured with “STEP” fans (only models EB 1200 - 1600) 44
7.16.2 Fan control diagrams 44
7.17 Hydraulic unit 44
7.18 Anti-freeze pump management (if ambient probe is installed) 45
7.19 ModBus 45
7.20 Automatic restart 45

The data in this manual are not binding and they can be modified by the manufacturer without notice. **Reproduction of this manual is strictly prohibited**

7.21 Parameters description-settings 45
7.21.1 Description of parameters 45
7.21.2 Parameters setting 49
7.21.3 Parameters dependent on remote terminal kit 50
OTHER COMPONENTS 51
8.1 Compressor motor protection 51
8.2 Refrigerant high and low pressure switches 51
8.3 Fan pressure switches (Models EB 250 - 900) 51
8.4 Pressure transducers 52
8.5 Level sensor 52
OPERATION AND MAINTENANCE 53
9.1 Operation 53
9.2 Maintenance 53
9.3 Access to the unit 53
9.4 Draining the process water circuit 54
9.5 Maintenance Schedule 55
TROUBLESHOOTING 56

CHAPTER 1

GENERAL INFORMATION

The units described in this manual may be referred to below as “WATER CHILLERS”
This manual is addressed to personnel responsible for installing, using and servicing the unit.
The units were constructed using components made by premium quality manufacturers and the entire design, production and control process was carried out in compliance with standard ISO 9001.
In the majority of applications the liquid in the user circuit is water so henceforth the term “WATER” will be utilized, even if the liquid in the user service is different (for example mixtures of water and ethylene glycol).
Hereinafter the expression “PRESSURE” is used to indicate relative pressure.
The electrical panel has been designed following UL508A standard rule (Industrial Control Panels)

The compressors and fans carry the cURus marking.
The following symbols are to be found on the decals affixed to the unit and also in the dimensional drawings and refrigerant circuit diagrams.
The meaning of each symbol is indicated below:

	Process water inlet		Process water outlet
	Indication of the axis of reference for lifting operations		Drain point to empty the unit of water
	Electric shock hazard		Risk of burns from contact with high-temperature surfaces
	Direction of flow of refrigerant fluid and water circuit		Rotation direction of pump (if installed)
	Water filling point		Air bleed valve
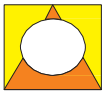	Opening to be used for the insertion of bars for the purpose of lifting the unit		

The following warning symbols are shown on the stickers on the unit. If requested, the same stickers are available also in French. Their meaning is the following:

WARNING SYMBOL	DESCRIPTION
	To maintain overcurrent, short-circuit, and ground-fault protection, the manufacturer’s instructions for selection of overload and short circuit protection must be followed to reduce the risk of fire or electric shock. In an overload or a fault current interruption occurs, circuits must be checked to determine the cause of the interruption. If a fault condition exists, the current-carrying components should be examined and replaced if damaged, and the integral current sensors must be replaced to reduce the risk of fire or electric shock.
	Hazardous voltage. All doors must be closed before energizing the panel.

The data in this manual are not binding and they can be modified by the manufacturer without notice. **Reproduction of this manual is strictly prohibited**

WARNING SYMBOL	DESCRIPTION
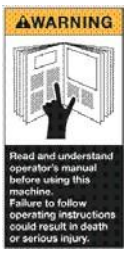	Read and understand operator's manual before using this machine. Failure to follow operating instructions could result in death or serious injury.
	Moving parts can crush and cut. Do not operate with guard removed. Follow lockout procedure before servicing.
	Hazardous voltage. Disconnect power before servicing or cleaning.

ATTENTION

This manual, which is addressed to users, installers, and service personnel, supplies all the technical information required to install and work with the unit and to perform the routine maintenance operations required to maximize its working life.
Use only genuine parts when carrying out routine maintenance or repairs.
Requests for SPARE PARTS and any INFORMATION concerning the unit must be made to your dealer or nearest service center, specifying the MODEL and SERIAL NUMBER shown on the unit's dataplate and on the last page of this manual.

CHAPTER 2

SAFETY

This unit is designed to ensure the best guarantees of safety and efficiency in its intended use, on the condition that it is installed, commissioned, and serviced in compliance with the instructions given in this manual.
The manual must therefore be studied by all those who want to install, use or maintain the unit.
The unit contains electrical components that operate at mains voltage and also moving parts.
All work on the unit must be carried out only after disconnecting the electrical supply. Maintenance operations involving work inside the unit must be performed by skilled and adequately qualified personnel equipped with suitable protection means (active and passive, e.g. work gloves) to ensure maximum safety.
Keep unauthorized persons (e.g. children) away from the place of installation of the unit.

2.1 General

When handling or maintaining the unit and all auxiliary equipment, personnel must operate with care observing all instructions concerning health and safety at the installation site.

ATTENTION

Numerous accidents that occur during operation and maintenance of the units are caused by failure to comply with basic safety rules and precautions.

An accident can often be avoided by recognizing a situation that is potentially hazardous.
The user must ensure that all personnel involved in operating and servicing the unit have read and understood all the warnings, precautions, prohibitions and notes given in this manual and affixed to the unit. Improper operation or maintenance of the unit and auxiliary equipment can be dangerous and can cause serious or fatal accidents.
We cannot anticipate every possible circumstance which might constitute a potential hazard.
The warnings in this manual are therefore not all-inclusive.
If the user adopts operational procedures or uses tools or working procedures that are not specifically recommended, he must take care to ensure that the unit and the auxiliary equipment are not damaged or made unsafe and that no risks emerge in relation to persons or property. Any improper use of the unit will relieve the manufacturer from any liability for possible personal injury or property damage.
Arbitrary modifications made to the unit will automatically invalidate all forms of guarantee provided by the manufacturer.

ATTENTION

The hot / chilled water produced by units cannot be used for hygiene/sanitary or food applications. If it is used for the above purposes, the installer must install an intermediate exchanger.
If the intermediate exchanger is not present, the installer must affix a warning notice to the effect "non potable water".



2.2 User circuit liquids

The user circuit liquids must be compatible with the materials used for the construction of the unit's hydraulic circuit.
The expression "liquids" means: water, water with additives and/or glycol. Additive and glycol suppliers must guarantee compatibility with the materials. For further information refer to "4.9 Materials in contact with the liquid to be cooled".

ATTENTION

If the liquids in the user circuit contain hazardous substances (such as ethylene glycol, for example), any liquid that is expelled from a leakage area must be collected because it is noxious for the environment. The disposal of hazardous liquids must be handled by specialized companies authorized for the treatment of hazardous wastes.

The data in this manual are not binding and they can be modified by the manufacturer without notice. **Reproduction of this manual is strictly prohibited**

2.3 Liftingand transport precautions

Avoid injury by using a hoist to lift heavy loads.
Check all chains, hooks, shackles and slings are in good condition and are of the correct capacity.
They must be tested and approved according to local safety regulations.
Cables, chains or ropes must never be attached directly to lifting eyes.
Always use an appropriate shackle or hook properly positioned. Arrange lifting cables so that there are no sharp bends.
Use a spreader bar to avoid lateral loading of hooks and eyebolts.
When a load is lifted from the ground keep well clear of the area beneath the load and the immediately surrounding area.
Keep lifting acceleration and speed well within safety limits and never leave a suspended load attached to a hoist any longer than strictly necessary. The weight values shown in the following table were obtained with the unit empty, pump P3 and axial fans.
The manufacturer does not supply load spreaders, lifting straps or hooks with the unit.

Model EB	**250**	**350**	**450**	**550**	**600**	**700**	**800**	**900**	**1200**	**1400**	**1600**
Weight (kg)	322	369	386	410	621	682	685	706	1197	1246	1273
Weight (lb)	710	814	851	904	1369	1504	1510	1556	2639	2747	2806

Model EB 250 - 500

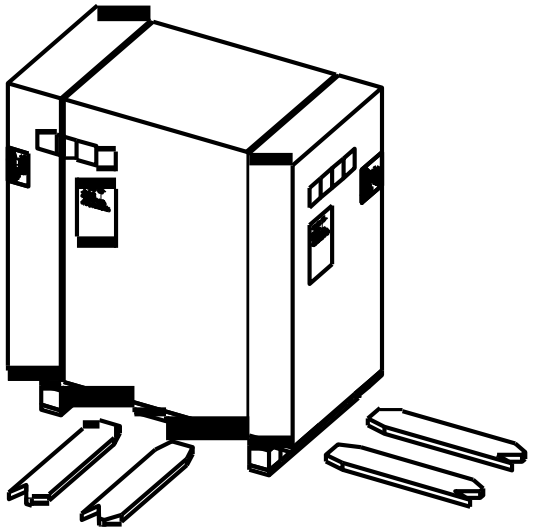

Model EB 600 - 900

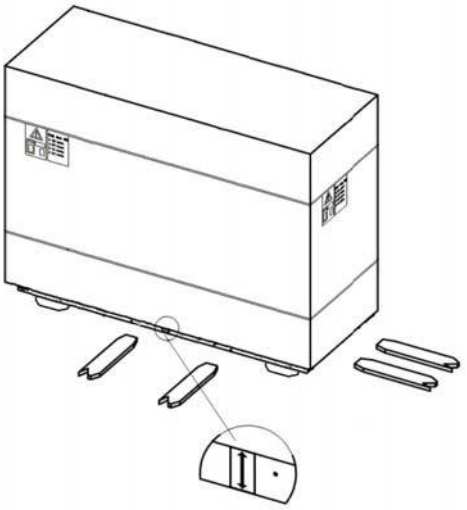

Model EB 1200 - 1600

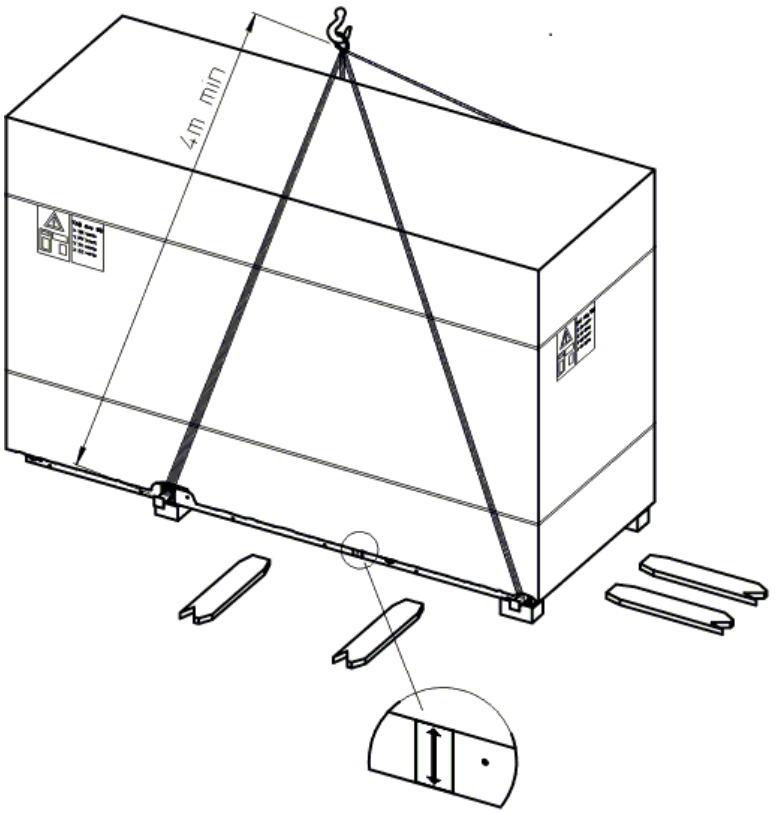

NOTE

Weight values are guideline, with the water circuit empty. The values may vary in relation to the configuration of the unit (pump type, supply type, and ventilation type).

2.4 Precautions to be adopted during installation

The connections to be prearranged concern the process water circuit. For connection to the mains electrical supply consult the technical documentation attached to the unit.

2.5 Precautions to be adopted during operation

The unit must be operated by competent personnel under the guidance of a qualified supervisor.
All water pipelines must be painted or clearly marked in compliance with local safety prescriptions in force in the place of installation.

ATTENTION

Do not remove or tamper with safety devices, protections, or the insulating materials installed in the unit and in the auxiliary equipment.

All electrical connections must comply with local codes.
The unit and its auxiliary equipment must be connected to earth and protected against short circuits and overloads.
When mains power is switched on, lethal voltages are present in the electrical circuits and extreme caution must be exercised if any work must be carried out on the electrical system.
Do not open the electrical equipment guard panels while the circuit is energized. Operations that require intervention with the electrical circuit energized must be performed only by qualified personnel using appropriate equipment and wearing apparel and devices designed to protect against electrical hazards.

The data in this manual are not binding and they can be modified by the manufacturer without notice. **Reproduction of this manual is strictly prohibited**

2.6 Maintenance precautions

ATTENTION

When it is necessary to discharge waste material do not pollute water pipelines, groundwater or watercourses. Avoid the combustion of materials that could produce fumes that are toxic and harmful when released into the atmosphere. Protect the environment by using only approved methods of disposal.

Keep a written record of all work carried out on the unit and the auxiliary equipment. The frequency and the nature of the work required over a period can reveal adverse operating conditions that should be corrected.

ATTENTION

Use only the refrigerant specified on the data plate of the unit.

Make sure that all instructions concerning operation and maintenance are strictly followed and that the complete unit, with all accessories and safety devices, is kept in good working order. The accuracy of pressure and temperature gauges must be regularly checked. If values are discovered that exceed the permissible tolerances, the gauges must be replaced.

ATTENTION

Do not perform welding procedures or other operations that can produce heat in the vicinity of elements containing oil or flammable liquids. Systems which may contain oil or flammable liquids must be completely purged and cleaned, e.g. with steam, before carrying out such operations.

Components in the vicinity must be protected with non-inflammable material and, if the operation is to be performed close to parts of the lubrication system or in the vicinity of components that may contain oil or inflammable liquids, the system must first be purged.
Never use an open flame as a light source to inspect parts of the unit.
For all units establish a suitable time interval for cleaning procedures.

ATTENTION

If replacement parts are needed use only original spares.

Take care not to damage pressure limiting devices.
All guards must be refitted after carrying out repair or maintenance work.

ATTENTION

Check the direction of rotation of the motors (the pump, if installed) when starting the unit for the first time and after work has been performed on the electrical connections or on the power supply sectioning device.

Do not use flammable liquids to clean the unit when it is running. If chlorinated hydrocarbon non-flammable fluids are used for cleaning, safety precautions must be taken against any toxic vapors that may be released.

ATTENTION

Before removing any panels or dismantling any part of the unit, carry out the following operations:

- Isolate the unit from the electrical power supply by disconnecting the supply upstream of the power feeding line.
- Lock out the disconnect switch in the "OFF" position by fitting a padlock.
- Affix a tag to the disconnect switch handle stating "WORK IN PROGRESS - DO NOT SWITCH ON".
- Do not set the electrical power switch to ON or attempt to start the unit if it has been tagged out with a warning sign.

Colored tracers can be used in service-maintenance operations.
Inspect all refrigerant circuit unions including connectors, flanges, and more generally all critical points (open unions) in order to prevent possible leakage of refrigerant gas.

The data in this manual are not binding and they can be modified by the manufacturer without notice. **Reproduction of this manual is strictly prohibited**

2.7 Refrigerant gases

The units are charged with R410A refrigerant

Do not replace or mix one gas with another because different gases are not mutually compatible.

To clean out a very heavily contaminated refrigerant system, e.g. after a refrigerant compressor burnout, a qualified refrigeration engineer must be consulted to carry out the task.

The manufacturer's instructions and local safety regulations should always be observed when handling and storing high pressure gas cylinders.

2.7.1 Refrigerants safety datasheet

Denomination:	R410A (50% Difluoromethane (R32); 50% Pentafluoroethane (R125)).

INDICATION OF HAZARDS

Major hazards:	Suffocation.
Specific hazards:	Rapid evaporation can cause frostbite.

FIRST AID MEASURES

General information:	Do not attempt to administer liquids or solids to persons who have lost consciousness.
Inhalation:	Move victims to the open air. Use oxygen or artificial respiration if necessary. Do not administer adrenaline or similar substances.
Contact with the eyes:	Wash thoroughly with plenty of clean water for at least 15 minutes and seek medical assistance.
Contact with the skin:	Wash immediately in plenty of clean water. Remove contaminated clothing immediately.

FIRE-FIGHTING MEASURES

Means of extinction:	Any.
Specific hazards:	Pressure rise.
Specific methods:	Cool containers with water spray.

MEASURES IN THE EVENT OF ACCIDENTAL LEAKAGE

Individual precautions:	Evacuate personnel to safe muster points. Provide adequate ventilation. Use personal protective equipment.
Environmental precautions:	Evaporates.
Cleaning methods:	Evaporates.

HANDLING AND STORAGE

Handling Technical measures/ precautions:	Ensure the presence of sufficient ventilation and/or air extraction means in the workplace.
Recommendations for safe use:	Do not breath fumes or aerosol.
Storage:	Close hermetically and store in a cool, dry and well-ventilated place. Store in its original containers. Incompatible products: explosives, flammable materials, organic peroxide

CONTROL OF EXPOSURE/INDIVIDUAL PROTECTION

Control parameters:	AEL (8-h and 12-h TWA) = 1000 ml/m3 for each of the two components.
Respiratory protection:	For rescue and maintenance work in tanks use autonomous breathing apparatus. The vapors are heavier than air and can cause suffocation, by reducing the oxygen available for breathing.
Protection of the eyes:	Safety spectacles.
Protection of the hands:	Rubber gloves.
Hygiene measures:	Do not smoke.

PHYSICAL AND CHEMICAL PROPERTIES

Color:	Colorless.
Odor:	Faint.
Boiling point:	-52.8°C at atmospheric pressure.
Flash point:	Non-flammable.
Relative density:	1.08 kg/l at 25°C.
Solubility in water:	Negligible.

The data in this manual are not binding and they can be modified by the manufacturer without notice. **Reproduction of this manual is strictly prohibited**

STABILITY AND REACTIVITY	
Stability:	No reactivity if used in compliance with instructions.
Materials to avoid:	Highly oxidizing materials. Incompatible with magnesium, zinc, sodium, potassium and aluminum. Incompatibility is more critical if the metal is present in the form of powder or if surfaces have been recently unprotected.
Hazardous decomposition products:	These products are halogen compounds, hydrofluoric acid, carbon monoxides (CO, CO2), carbonyl halides.

TOXICOLOGICAL INFORMATION	
Acute toxicity:	(R32) LC50/inhalation/4 hours/lab. rats 760 ml/l (R125) LC50/inhalation/4 hours/lab. rats 3480 mg/l
Local effects:	Concentrations significantly above the TLV can cause narcotic effects. Inhalation of products in decomposition can lead to respiratory difficulty (pulmonary edema).
Long-term toxicity:	No carcinogenic, teratogenic, or mutagenic effects observed in laboratory animals.

ECOLOGICAL INFORMATION	
Global warming potential GWP (R11=1):	1730
Ozone depletion potential ODP (R11=1):	0
Considerations on disposal:	Usable with reconditioning.

CHAPTER 3

TECHNICAL DATA

The data plate affixed to the unit bears the following technical data:

MODEL and CODE	The model number and the code identify the size of the unit and the type of construction.
MANUAL	Code number of the manual.
SERIAL NUMBER	Construction number of the unit.
MANUFACTURING YEAR	Year of unit's final testing.
VOLTAGE/PHASE/FREQUENCY	Electrical power supply characteristics.
MAX CURRENT DRAW (I max)	Unit current draw in limit operating conditions.
SHORT CIRCUIT CURRENT	Short circuit current.
HIGHER MOTOR FLA	Max. absorbed current.
INSTALLED POWER (P max)	Unit power input in limit operating conditions
PROTECTION RATING	According to European standard EN 60529 / NEMA 250 international standard.
ELECTRICAL DIAGRAM	Identifies the electrical diagram number.
REFRIGERANT	Refrigerant fluid in the unit.
REFRIGERANT QUANTITY	Quantity of refrigerant fluid contained in the unit.
USER CIRC. FLUID	Type of user fluid utilized by the unit (normally water)
MAX WORKING PRESSURE	Max. design pressure of the user circuit.
MAX. TEMPERATURE	Maximum design temperature of the user circuit; this should not be confused with the maximum working temperature which is established when the offer is made.
CONDENSER COOLING FLUID	Fluid used by the unit to cool the condenser.
MAX WORKING PRESSURE	Max. design pressure of the condenser cooling circuit (this data is not present if the unit is air cooled condensed).
MAX. TEMPERATURE(*)	Condenser cooling circuit maximum design temperature (this information is not given if the unit's condenser is air-cooled).
SOUND PRESSURE LEVEL	Free field sound pressure level in hemispherical radiation conditions (open field) at a distance of 1 m from the condenser side of the unit and a height of 1.6 m from the ground.
AMBIENT TEMPERATURE	Minimum and maximum values of ambient air temperature.
WEIGHT	Approximate weight of the unit before packing.

ATTENTION

The performance of the unit depends mainly on the flow rate and temperature of water in the user circuit, and the condenser thermal exchange fluid temperature. These values are defined at the time of the offer.

The data in this manual are not binding and they can be modified by the manufacturer without notice. **Reproduction of this manual is strictly prohibited**

3.1 Data for standard units

3.1.1 Dimensions

See attached drawings.

3.1.2 Characteristics of pumps and fans

Model EB			250	350	450	550
Tank capacity	water volume	(liters) (gal/min)	140 37	255 67	255 67	255 67
Pump P3	water flow rate	(m^3/h) (gpm)	1.9/9.6 8,4/42,3	2.4/9.6 10,7/42,3	3.0/19 13,4/84,5	3.6/19 15,9/84,5
	pump pressure head	(bar) (PSI)	3.1/1.3 44,8/18,9	2.9/1.6 42,0/22,5	2.8/1.5 41,0/21,8	2.8/1.6 40,8/22,8
	rated power	(kW)	0.9	0.9	1.85	1.85
Pump P5	water flow rate	(m^3/h) (gpm)	1.9/15 8,4/66,0	2.4/15 10,7/66,0	3.0/15 13,4/66,0	3.6/15 15,9/66,0
	pump pressure head	(bar) (PSI)	5.3/2.5 75.6/36.6	5.3/3.0 75.2/43.3	5.3/3.0 75.6/43.3	5.1/3.2 74.4/47.1
	rated power	(kW)	3.0	3.0	3.0	3.0
Axial flow fan	No. of fans		1	2	2	2
	total airflow	(m^3/h) (cfm)	9900 5825	16900 9945	16000 9415	16000 9415

Model EB			600	700	800	900	1200	1400	1600
Tank capacity	water volume	(liters) (gal/min)	350 92.5	350 92.5	350 92.5	350 92.5	500 132	500 132	500 132
Pump P3	water flow rate	(m^3/h) (gpm)	3.8/19 16,7/84,5	4.7/19 20,6/84,5	5.3/24 23,4/ 105,7	5.6/24 27,1/ 105,7	7.5/48 33,3/ 211,3	9.0/48 39,6/ 211,3	10.3/48 45,5/ 211,3
	pump pressure head	(bar) (PSI)	2.8/1.9 40,9/27,3	2.8/1.9 40,7/27,3	3.3/1.4 47,5/20,4	3.2/1.4 46,9/19,6	3.8/1.5 55,5/21,8	3.8/1.5 54,9/21,8	3.7/1.5 54,3/21,8
	rated power	(kW)	1.85	1.85	2.2	2.2	4	4	4
Pump P5	water flow rate	(m^3/h) (gal/min)	3.8/30 16,7/ 132,1	4.7/30 20,6/ 132,1	5.3/30 23,4/ 132,1	6.1/30 27,1/ 132,1	7.5/48 33,3/ 211,3	9.0/48 39,6/ 211,3	10.4/48 45,5/ 211,3
	pump pressure head	(bar) (PSI)	5.2/1.9 75.3/27.1	5.2/1.9 74.7/27.1	5.1/1.9 74.1/27.3	5.1/1.8 73.3/26.1	5.5/3.1 80.0/44.6	5.5/3.1 79.7/44.6	5.5/3.1 79.3/44.6
	rated power	(kW)	4	4	4	4	7.5	7.5	7.5
Axial flow fan	No. of fans		2	2	3	3	2	2	2
	total airflow	(m^3/h) (cfm)	19600 11535	19400 11415	26550 15625	26550 15625	44000 25895	42600 25070	41600 24285

NOTE

The values in the table may vary in relation to the unit model and configuration. In this case refer to the offer data.

NOTE

The pressure head is the pressure head available in the user's premises. The installed pump my differ with respect to the standard pump. For the flow rate and pressure head values two numbers are specified: the first refers to nominal conditions and the second refers to maximum conditions.

3.1.3 Sound level measurements

	Fan	Lp dB(A) *	Lw dB(A) **
EB 250	axial	70,9	83,9
EB 350	axial	72,0	85,0
EB 450	axial	71,2	84,2
EB 550	axial	72,1	85,1
EB 600	axial	74,2	87,2
EB 700	axial	74,1	87,1
EB 800	axial	75,6	88,6
EB 900	axial	75,3	88,3
EB 1200	axial	79,5	92,5
EB 1400	axial	79,6	92,6
EB 1600	axial	79,3	92,3

* at distance of 1 m (3.2 FT)
** global

Test conditions

Noise levels refer to operation of the unit at full load in nominal conditions.
Sound pressure level in hemispherical irradiation conditions at a distance of 1 m (3.2 FT) from the condensers side of the unit and height of 1.6 m (5.2 FT) from the ground. Values with tolerance of ± 2 dB.
Sound pressure level: according to ISO 3744.

The data in this manual are not binding and they can be modified by the manufacturer without notice. **Reproduction of this manual is strictly prohibited**

CHAPTER 4

DESCRIPTION

4.1 Components

Data for materials are referred to standard units. Non-standard materials may be utilized in order to meet specific requirements. In this case refer to the offer data.
The units are basically composed of the following parts:

- Refrigerant compressor
- Condenser
- Evaporator
- Tank
- Pump
- Frame/cabinet
- Electronic controller

4.1.1 Refrigerant circuit

EB 250 - 900 models feature a single refrigerant circuit with one or two compressors connected in parallel (tandem).
EB 1200 - 1600 models feature two refrigerant circuits with two compressors connected in parallel (tandem). Each refrigerant circuit is equipped with the following components:

- refrigerant fluid utilized R410A;
- hermetic scroll compressor;
- pressure switch for fans with On/Off control (only EB 250 - 900);
- high and low refrigerant pressure switches;
- high pressure transducer for fan speed control and for unloading (modes EB 1200 - 1600);
- thermostatic lamination valve complete with external pressure equalizer;
- filter dryer;
- liquid sight-glass;
- refrigerant pressure gauges;
- check valve (EB 1200 - 1600);
- Schrader service valves;

For more information consult the attached diagrams.

4.2 Compressors

The compressors are of the SCROLL type and are characterized by high energy efficiency, low vibration and consequent very low noise during normal operation.
The compressors are cooled by the refrigerant on the suction line, protected against possible overheating of the windings by an internal module that monitors windings temperature, and protected upline by thermal magnetic cutouts. These components are housed in an enclosed compartment, but they are readily accessible.

NOTE

During the short periods of starting and stopping the compressor you may hear a metallic noise due respectively to the initial contact between the coils and to the momentary reversal of their rotation. This noise is absolutely normal and does not affect the reliability of the compressor.

ATTENTION

At the time of the first start following a prolonged stoppage lasting several days, ensure the crankcase heater of each compressor is switched on at least 12 hours before pressing the start button.

NOTE

EB 1200 - 1600 units can be optionally fitted with compressor stating with a Soft Starter.
The Soft Starter is linked to each compressor and it serves to limit peak current at the time of compressor starting.
- Units equipped with soft starters can operate up to a maximum ambient temperature of 40°C, beyond which the unit simply stops, without tripping any alarms.
- The soft starters are not compatible with capacitive devices (e.g. power factor correction capacitors) installed between the soft starter and the compressor motor. Any static or dynamic power factor correction systems installed upline from the main power circuit breaker must not operate simultaneously with staring of the soft starter.

4.3 Condenser

Condensation occurs in finned core coils composed of copper tubes and headers, corrugated aluminum fins, and galvanized sheet metal shoulders.

4.4 Evaporator

The evaporator is of the finned core type; water flows in contact with the finned surface at velocities such as to ensure low pressure drops, while the refrigerant flows through the tubes.
In these models the exchanger is protected from the risk of ice formation caused by low evaporation temperatures, with anti-freeze strategies handled by the electronic controller. The evaporator water outlet temperature is controlled by a probe. If negative room/water temperatures are required, a mixture of water and glycol must be used.
To drain the circuit refer to “9.4 Draining the process water circuit”.

4.5 Tank

The storage tank is cylindrical.
The tank can be protected against freezing by means of an electric heater managed by the electronic controller. A level sensor in the tank serves to signal low water level conditions. The standard supply includes anti-condensation cladding, a drain valve and an air bleed valve.
An internal bypass between the water delivery and return connections makes it possible to read the anti-freeze probe if the unit’s process water inlet and outlet connections are inadvertently closed. In this case the unit stops due to tripping of the anti-freeze alarm and the shut-off valves must be reopened.
The bypass serves exclusively to allow an anti-freeze alarm to trip (if present) and to allow the pump to run with a reduced water flow rate without damage. It is advisable to avoid repeated anti-freeze alarm trip cycles in the foregoing conditions.



For models EB 250 - 1600 it is possible to fit a semi-transparent container kit, secured to the rear of the unit. In steady state conditions the water level in the container must be approximately at the half-way point. In this case water filling is performed via the container kit.

4.6 Pump

The unit is equipped with centrifugal pumps that can be of two different types, characterized by their ability to provide different pressure heads depending on requirements (3 and 5 barg / 43.5 and 72.5 PSI pump). The unit can also be supplied without an installed pump.
The pump seals are in silicon carbide/silicon carbide/EPDM.

ATTENTION

Bleed the circuit by unscrewing the bleed cap on the pump whenever the hydraulic circuit is filled. See 5.4 “Hydraulic connections”.

NOTE

The pump must never run dry.

4.7 Fans

4.7.1 Axial

The fans are of the axial flow type, comprising a diecast aluminum fan wheel with sickle shaped blades.
The protection rating of the fans is IP54.
All fans feature insulation class F to ensure they are compatible with outdoor operation in all climates. Fan assembly is completed by an upper safety grille (supporting the fan).

The data in this manual are not binding and they can be modified by the manufacturer without notice. **Reproduction of this manual is strictly prohibited**

4.8 Cabinet

The entire plinth, the uprights, and the outer panels are made of galvanized carbon steel sheet and are assembled by means of screws and/or rivets. All panels undergo phosphor degreasing treatment followed by epoxy polyester power coating.
The frame is designed to allow easy access to all components of the unit.

Model		Width	Depth	Height
EB 250 - 550	(mm) (in)	760 29.9	1865 73.4	1447 57
EB 600 - 900	(mm) (in)	865 34	2255 88.8	2065 81.3
EB 1200 - 1600	(mm) (in)	1255 49.4	3295 129.7	2140 84.2

4.9 Materials in contact with the liquid to be cooled

Standard chillers: carbon steel, copper, aluminum, zinc, brass, stainless steel and plastic materials specifically:

- evaporator with copper tubes, aluminum fins and galvanized sheet metal shoulders;
- carbon steel tank.

Chillers with non-ferrous hydraulic circuit (EB 250 - 600): stainless steel (AISI 304), copper, brass and plastic materials. Specifically:

- with copper tubes and fins and brass shoulders;
- tank in AISI 304 stainless steel.

The pump mechanical seals are in silicon carbide/silicon carbide/EPDM.

4.10 Overall dimensions and minimum clearances with respect towalls

See the enclosed electrical diagrams.

4.11 Electricalcircuit

Refer to Chapter 5 “Installation” for information on electrical hook-ups and consult the attached diagrams.

CHAPTER 5

INSTALLATION

ATTENTION

Before installing or operating these units, ensure that all personnel involved have read and understood Chapter 2 "Safety".

5.1 Inspection

As soon as the unit has been unpacked check it carefully for damage.

5.2 Location

1. The unit can be installed either outdoors or in an enclosed environment, depending on the degree of IP protection of the electrical panel and the unit itself.
2. If the unit is installed indoors the place of installation must be well ventilated. In certain cases it may be necessary to install ventilation fans or extractor fans in order to reduce room temperature.
3. The ambient air must be clean, avoid sea ambients (brackish air), and not contain flammable gas or corrosive solvents.
4. The minimum and maximum working ambient temperature are specified on the unit data plate. Ensure that the unit is not installed in flows of hot air emitted by other equipment.
   In extreme temperature conditions, the protection devices may trip.
5. Do not obstruct or interfere with the air flow produced by the unit; comply strictly with the minimum spaces/ distances specified in the installation drawings.
6. The machine must be installed on a perfectly horizontal flat surface, built and calculated to withstand the machine's operating weight, especially in the contact points highlighted in the installation drawing. **In the event of installations which fail to comply with the above requirements, the manufacturer's warranty cover will immediately become null and void and the unit could malfunction or even lock out.**
7. Leave free space around the unit for access during service interventions (see Attachments).
8. Do not install the plant in sites exposed to strong winds; if unavoidable, install suitable windscreens.

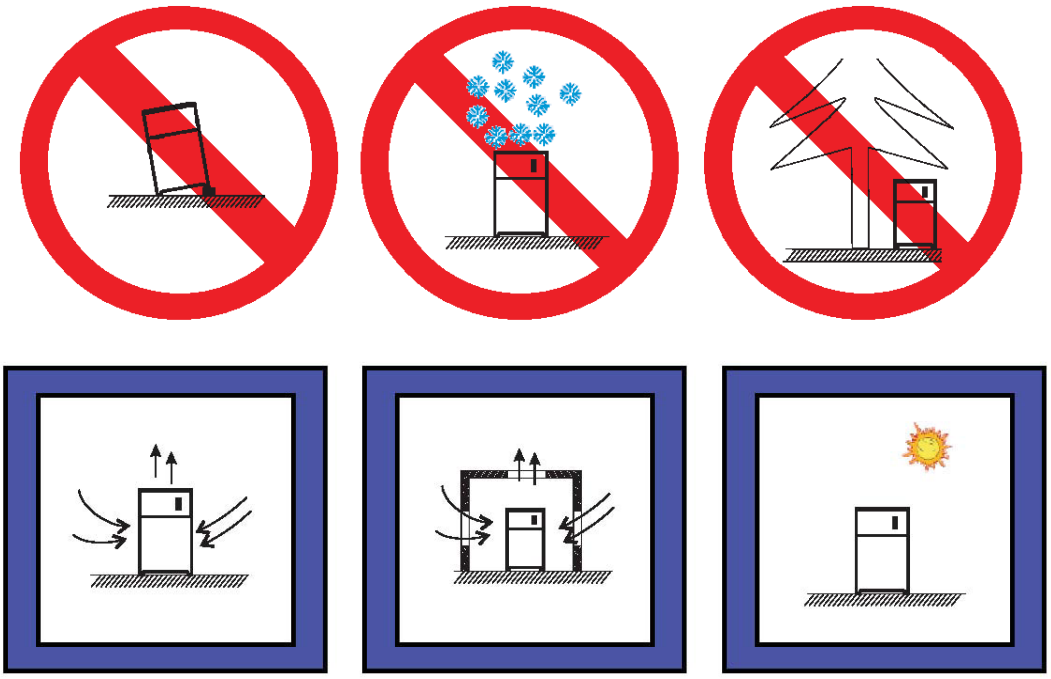

The data in this manual are not binding and they can be modified by the manufacturer without notice. **Reproduction of this manual is strictly prohibited**

5.3 Freeze protection

Even if the minimum operating temperature is higher than 0°C/32°F, during shutdown periods in the cold season the unit may be subject to temperatures that are lower than 0°C/32°F.
In such cases if the water is not drained out of the unit ethylene glycol antifreeze should be added to the water in the following percentages:

Ambient T up to [°C] (°F)	Ethylene Glycol [% by weight]
0 (32)	0
-5 (23)	15
-10 (14)	25
-15 (5)	30
-20 (-4)	40

In accordance with the chilled water outlet temperature, to avoid the formation of ice ethylene glycol antifreeze should be added to the water in the following percentages:

Water outlet T up to [°C] (°F)	Ethylene Glycol [% by weight]
5 (41)	0
0 (32)	19
-5 (23)	27
-10 (14)	34
-15 (5)	39
-20 (-4)	44

ATTENTION

The anti-freeze setting is 4°C/39°F. To reduce the anti-freeze setting edit parameter **AL26**.

5.3.1 Operating limits

The operating limits are decided at the time of sale. Refer to the data specified in the contract.

Ambient air temperature		Evaporator water inlet temperature		Evaporator water outlet temperature		Water temperature gradient		
Min	Max	Min	Max	Min	Max	Min	Max	
°C/°F		°C/°F		°C/°F		°C/°F		
-5/23	43/109 (1)	0/32	35/95	-5/23	30/86	4/7	10/18	
5/23	43/109 (1)	-5/23	35/95	-10/14	30/86			

NOTE

For water outlet temperatures <= +5°C /41°F we recommend the use of anti-freeze solutions (compatible with the contact materials);
(1) *reference value for the range with outlet water temperature of 15°C/59°F.*

5.4 Hydraulic connections

NOTE

All the unit's hydraulic connections must be made by the customer.

1. Connect the unit to the water pipes observing the water flow direction as shown in the attached dimensional drawings.
2. Provide two valves (one at the inlet, one at the outlet) to isolate the unit in the case of maintenance work without having to empty the user water circuit.
3. Fill the tank with water using:
   - a remote filling system, bleeding the air from the tank manually if necessary by means of the manual bleed valve.
   - if the water circuit is subject to frequent infiltrations of air it is good practice to install an automatic bleed valve.
4. If the unit is supplied without pump make sure the pump installed by the user has its suction port connected directly to the tank outlet connection in the event of a closed user circuit.
5. If the unit is supplied without pump make sure the pump installed by the user has its outlet port connected directly to the unit inlet connection in the event of a user circuit that is open to the atmosphere.

NOTE

The pump must never run dry.

ATTENTION

If the unit is not equipped with the hydraulic unit a pump must be installed for the evaporation water circuit.

For any maintenance requirements it is advisable to install a water drain cock at the lowest point of the circuit.

Evaporator water connections sizes:

Unit model EB	250 - 550	600 - 900
Evaporator IN/OUT water connections	Rp 1" 1/2	Rp 2"

Unit model EB	1200 - 1600	Unit with tank maximum pressure [bar/PSI]
Evaporator IN/OUT water connections	Rp 2" 1/2	6/87

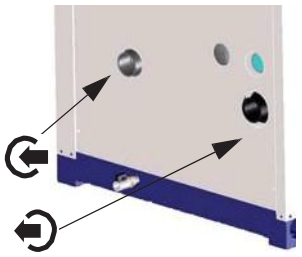

	Process water inlet		Process water outlet

The data in this manual are not binding and they can be modified by the manufacturer without notice. **Reproduction of this manual is strictly prohibited**

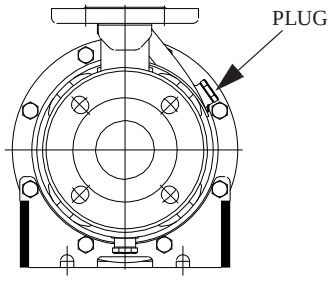

When filling the circuit with liquid check to ensure the absence of air bubbles and contaminants. If the pump runs noisily or emits anomalous noise it may be necessary to bleed the liquid circuit in order to prime the pump.
The procedure is as follows:

- unscrew the filler/breather plug at the top of the pump
- fill the hydraulic circuit until water starts to overflow from the filler hole
- refit the plug and tighten it

Repeat the operation if the pump continuous to run noisily, in such a way as to eliminate any air that had previously remained trapped in the impeller vanes.

5.5 Expansion vessel

In the presence of a closed hydraulic circuit an expansion vessel must be installed.
The expansion vessel must always be installed on the pump suction side.
To calculate the minimum volume of the expansion vessel use the formula shown below, which is valid if the circuit pressure is less than or equal to 0.5 bar / 7.2 PSI when the pump is idle and the maximum working pressure of the expansion vessel is greater than or equal to 4 bar / 58 PSI.
The volume of expansion vessel V in liters is provided by the formula:
$V = 2 \cdot Vt \cdot (Ptmin - Ptmax)$
where:

Vt=	Total circuit volume in liters
Ptmin=	Specific density at minimum temperature that can be reached by the water throughout a twelve month period expressed in °C (also during system shutdown)
Ptmax=	specific density at minimum temperature that can be reached by the water throughout a twelve month period expressed in °C (also during system shutdown)

Calculation example:
Vt=200 liters
percent ethylene glycol by volume=30%
tmin=5°C from table **Ptmin**=(1.045+1.041)/2 = 1.043
tmax=40°C from table **Ptmax**=1.0282
$V=2 \cdot 200 \cdot (1.043 - 1.0282)=5.92$ liters

Specific densities table P

	% Glycol	0%	10%	20%	30%	40%
Temperature [°C](°F)	-20(-4)	1.0036	1.0195	1.0353	1.0511	1.0669
	-10(14)	1.0024	1.0177	1.033	1.0483	1.0635
	0(32)	1.0008	1.0155	1.0303	1.045	1.0598
	10(50)	0.9988	1.013	1.0272	1.0414	1.0556
	20(68)	0.9964	1.0101	1.0237	1.0374	1.051
	30(86)	0.9936	1.0067	1.0199	1.033	1.0461
	40(104)	0.9905	1.003	1.0156	1.0282	1.0408

5.6 Electrical connections

The machine must be connected to the main power supply in accordance with the laws and regulations in force in the country of installation, after verifying the wiring diagram annexed to the unit.
Voltage, frequency and the number of phases must comply with the values indicated on the machine data plate.
Main distribution systems in United States:

System	Nominal Voltage	Utilization Voltage	
	120	115	110
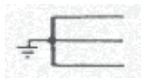	240/120	230/115	220/110
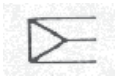	600 480 240	575 460 230	550 440 220
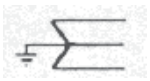	480	460	440
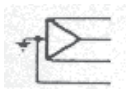	480/277 208/120	460/266 200/115	440/254 190/110
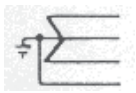	240/120	230/115	220/110
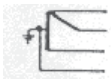	240/120	230/115	220/110

Main distribution systems in Canada:

System	Nominal Voltage	Utilization Voltage	
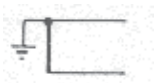	240 480 600	230 460 575	220 440 550
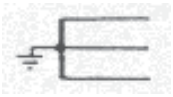	240/120	230/115	220/110
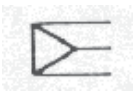	600 480 240	575 460 230	550 440 220
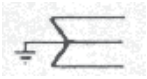	600 480 240	575 460 230	550 440 220
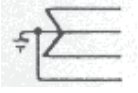	600/347 480/277 416*/240 208/120	575/332 460/266 400*/230 200/115	550/318 440/254 380*/220 190/110

The data in this manual are not binding and they can be modified by the manufacturer without notice. **Reproduction of this manual is strictly prohibited**

For mains power input:

1. Connect the machine (terminal  in the electrical panel) to the earth system of the building;
2. Provide protection against direct contact of at least NEMA Type 1 upline from the power cable;
3. Fit a device protecting the power cable from overcurrent (short-circuit) (see indication in the electrical diagram) upline from the power cable. For this purpose, all protection devices must be homologated ("listed").
4. Use conductors which can carry the maximum current required at the maximum ambient operating temperature, according to the type of installation chosen (see indication in the electrical diagram). Use only UL marked copper cables, in conformity with NEC (NATIONAL ELECTRICAL CODE) and CEC (CANADIAN ELECTRICAL CODE).
5. After the connection to the circuit breaker/switch (as indicated in the wiring diagram), the unit's power cable must exit the unit by the appropriate hole positioned on the back panel and identified by a label with the indication of the power supply.

5.7 Phase Monitor

By means of a Phase Monitor device (see unit electrical schematic) the electronic controller is able to monitor the unit's power supply, stopping the unit in the case of missing phases or an incorrect phase sequence.
Tripping of the Phase Monitor shuts down the unit and displays alarm ALc1.
A certain level of power supply instability is perfectly normal. If the frequency with which the unit is shut down due to tripping of the Phase Monitor tends to increase unacceptably, contact your local electricity company to find a solution.

ATTENTION

Never tamper with the Phase Monitor under any circumstances.

CHAPTER 6

STARTING

ATTENTION

Before starting this type of unit, ensure that all personnel involved have read and understood Chapter 2 "Safety".

ATTENTION

On starting the unit:

1) If the high pressure alarm trips (b1HP/b2HP/b1hP/b2hP) without the compressor having started, stop the unit immediately by setting it to off on the controller.
Now check the refrigerant circuit high pressure value.
2) If the Phase Monitor alarm ALc1 trips check the correct phase sequence upline from the unit. The ALc1 alarm may be generated by tripping of the protections upline from the phase monitor.

1. Check that the unit shut-off valves are open.
2. Check that the tank has been completely filled with water and that the air has been bled out correctly.
3. Check that the ambient temperature is within the range indicated on the unit's data plate.
4. Use the pressure gauge on the rear panel of the unit to check that the pressure is approximately 0.5 bar / 7.2 PSI (only for closed hydraulic circuits).



5. Check that the main switch is in the OFF position ("O").
6. Check that the unit power supply voltage is correct.
7. Power the unit by means of the line protection device.
8. Close the unit's main switch by setting it to the ON position ("I").
9. Check that water is flowing through the evaporator.
10. To start the unit perform the following procedure (For more information consult Chapter 7 "Electronic controller")



From unit OFF (stand-by) press and release button ❄ to switch the unit on or off in chiller mode. With the unit on LED ❄ is lit.

11. On three-phase power supply models make sure the compressor operates correctly (no anomalous noise and no overheating) and check that the fans and the pump (if present) rotate in the correct direction.
    If necessary, invert two phase wires of the power supply line.
12. Check that the pressure difference between the pressure gauge reading with the pump running and the reading with the pump idle is higher than the available pressure head with the maximum pump flow rate. If the difference is lower this means that the water flow rate is higher than the maximum permissible value. To avoid damaging the pump increase the pressure drop in the hydraulic circuit, for example by partially closing a shut-off cock on the pump outlet.
13. If at the time of first startup the ambient temperature is high and the water temperature in the hydraulic circuit is significantly higher than the operating value (e.g. 25-30°C / 77-86°F) this means that the chiller is starting in overloaded conditions resulting in possible tripping of the protections. To reduce the overload you can progressively close (without closing it completely!) a valve at the chiller outlet to reduce the flow rate of water passing through it. As the water temperature in the hydraulic circuit approaches the working value, the valve can be re-opened.
14. The unit is now **ready to start operating**.
    If the thermal load is lower than that produced by the unit, the water temperature decreases until it reaches the setpoint value set following the instructions. Electronic controller
    Once the SETPOINT value has been reached the controller monitoring the water inlet temperature will stop the compressor. In these conditions the water pump runs constantly.

The data in this manual are not binding and they can be modified by the manufacturer without notice. **Reproduction of this manual is strictly prohibited**

CHAPTER 7

ELECTRONIC CONTROLLER

7.1 User interface



The icon is flashing during the countdown of the interval between defrost cycles.
The icon is steady on during the defrost cycle (not used).
Chiller operating mode icon.
Not used.
Lit if at least one condensing fan is running.
Compressors operating status icon, lit if the associated compressor is running.
Flashing if the compressor is in timer controlled starting mode.
Upper display
Shows a temperature value when lit.
If lit in programming mode show temperature setpoints or differentials.
Clock icon (pumps, compressors operating hours).
When lit in programming mode shows the work load hours.
Flashing in the functions menu indicates the time remaining before defrost start.
Shows a pressure value when lit. If lit in programming mode shows pressure setpoints or differentials.
Lower display
Flashing if the pressure switch digital input is active with the pump running.
Flashing if at least one alarm is present
Lit if at least one of the water pumps is running.
FC (not used). AUX lit with tank auxiliary heater on.
Lit if heaters (anti-freeze) heaters are on.
Heat pump operating mode icon (not used).

7.2 Function of buttons



Press once from the main mask to display the chiller setpoint.
Press twice from the main mask to display the real working setpoint (if present).
Press for 3 seconds from the main mask to edit the chiller setpoint.
Press once in programming mode to edit or confirm a parameter value.
Press once in the ALrM menu to reset the alarm.
Press once in the power display probes menu to alternate the display of the circuits.
Press once to switch the unit ON or OFF in heat pump mode (not used in chiller-only units).
Press once to switch the unit ON or OFF in chiller mode.
Press once to gain access to the functions menu.
Press once in programming mode to quit the parameters or parameter editing mode.
Press once from the main mask to display temperature/pressure values on the upper/lower display.
Press once in programming mode to scroll the parameters or decrease a parameter value.
Press once to display temperature/pressure values on the upper/lower display.
Press once in programming mode to scroll the parameters or increase a parameter value.
Press for 1 second in programming mode to change the parameters access level. See “7.12.1 Access to parameters”.

7.2.1 Function of combined buttons

BUTTONS	FUNCTION
SET + ▼	To enter programming mode (pressed for 3 seconds).
SET + ▲	To exit programming phase.
SET + menu	In programming mode: Press once from the main mask to display the "user" parameters; Press twice from the main mask to display the "service" parameters.

7.3 Remote terminal



Up to two remote terminals can be connected to the instrument.
The terminal generally shows the same parameters as the local display. The display can be customized with the dedicated parameters (see "7.21 Parameters description-settings")
In the absence of communication between the control unit and the remote terminal the upper display shows the message "OP-" (no link).

7.4 Probes key

This chapter refers to the BEWIT, BEWOT,BWOT, BHP1, BAT1 and BTWOT probes; for the positioning of these probes consult the refrigerant circuit diagram and the electrical diagram.
Descriptions of the probes utilized are given below
Models EB 250 -900:

Probe code	Board label	Board terminals	Description
BTWOT	**EOut**	**PB1**	Tank water outlet temperature probe (temperature control)
BEWOT	**Out1**	**PB2**	Evaporator water outlet temperature probe (anti-freeze)
BAT1	**Et**	**PB6**	Ambient temperature probe

Models EB 1200 - 1600:

Probe code	Board label	Board terminals	Description
BTWOT	**EOut**	**PB1**	Tank water outlet temperature probe
BEWOT1	**Out1**	**PB2**	Evaporator 1 water outlet temperature probe
BHP1	**CdP1**	**PB3**	Circuit 1 high pressure transducer
BHP2	**CdP2**	**PB4**	Circuit 2 high pressure transducer
BEWOT2	**Out2**	**PB5**	Evaporator 2 water outlet temperature probe
BAT1	**Et**	**PB6**	Ambient temperature probe

7.5 Unit start/stop

The unit can be switched on and off as follows:

- From the keypad (local or remote)
- From a digital input configured as remote ON/OFF
- Makes it possible to gain access to parameters programming mode.

NOTE

In case of a power loss, when power is restored the unit will be ON if it was ON at the time of power loss, and OFF if it was OFF.

The data in this manual are not binding and they can be modified by the manufacturer without notice. **Reproduction of this manual is strictly prohibited**

7.5.1 Start from the keypad

From unit OFF (stand-by) press and release button to switch the unit on or off in chiller mode. With the unit on LED is lit.
Stand-by mode is set each time the unit is turned off from chiller operating mode.. Also in stand-by the controller makes it possible to:

- Display the measured values
- Manage the alarm situation by displaying and signaling.
- Programmable

When the unit is in stand-by the controller shows the label Stby.



7.5.2 Start from a digital input

The unit can be switched on/off from a digital input configured as remote On/OFF.
The power-off command (local or remote) always assumes priority with respect to the power-on command. If the unit is powered-off with a local command it must be powered back on with a local command.
When the unit is in OFF status from a digital input the controller shows the label OFF on the display.



7.6 Setpoint

7.6.1 Display the setpoint

To display the setpoint press and release the SET key.
With the unit in stand-by the lower display will show **SetC** (chiller set)
The upper display will show the set value.

7.6.2 Change the setpoint

To change the unit working setpoint press the SET key for at least 3 seconds and the working setpoint **SetC** (chiller set) will appear in flashing mode.

The setpoint can be changed using the or buttons.

To save the new setpoint, press SET or wait for the time-out to exit programming mode.

7.7 Dynamic setpoint function

The regulator allows the operating setpoint to be modified by adding or subtracting a coefficient proportional to the external air temperature.
For industrial applications, the purpose of this function is to prevent condensate from forming on the surface of the component cooled by the unit.
The operating setpoint increases proportionally as the ambient temperature rises; the difference between the ambient temperature and the operating setpoint is a value which can be set by means of parameter **Sd03**, with values from 23 to 41°F.
To activate the function, set the following parameters:
Chiller setpoint **ST01**= 32°F
Max. increase in dynamic setpoint **Sd01**= 86°F
Temperature differential between external air and dynamic setpoint **Sd05**= 86°F
External air temperature - dynamic setpoint delta **Sd03**= 23 to 41°F
The graphs below illustrate operation of the dynamic setpoint (**SEtr**) with **Sd03** set at 39°F and 25°F.
For example, with ambient T of 75°F the operating setpoint **SEtr**= 68°F in case 1 and **SEtr**= 82°F in case 2.

Case 1 - Sd03= 39

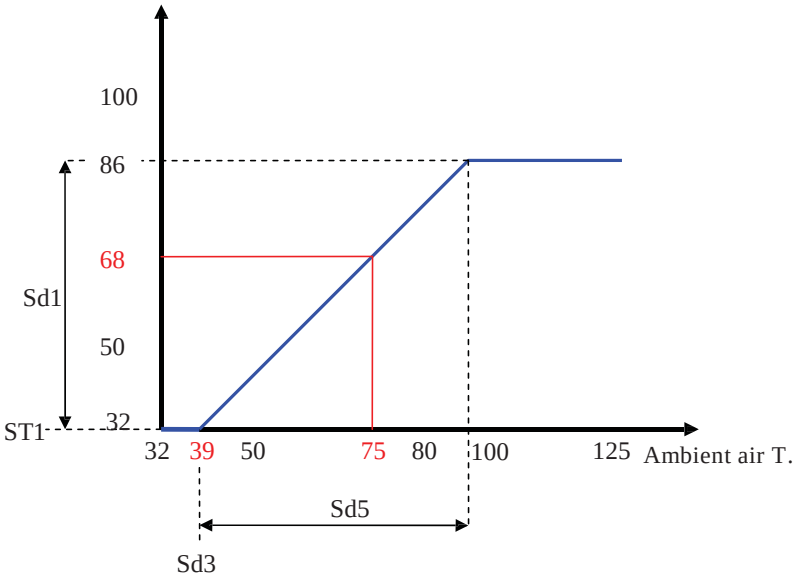

Case 2 - Sd03= 25

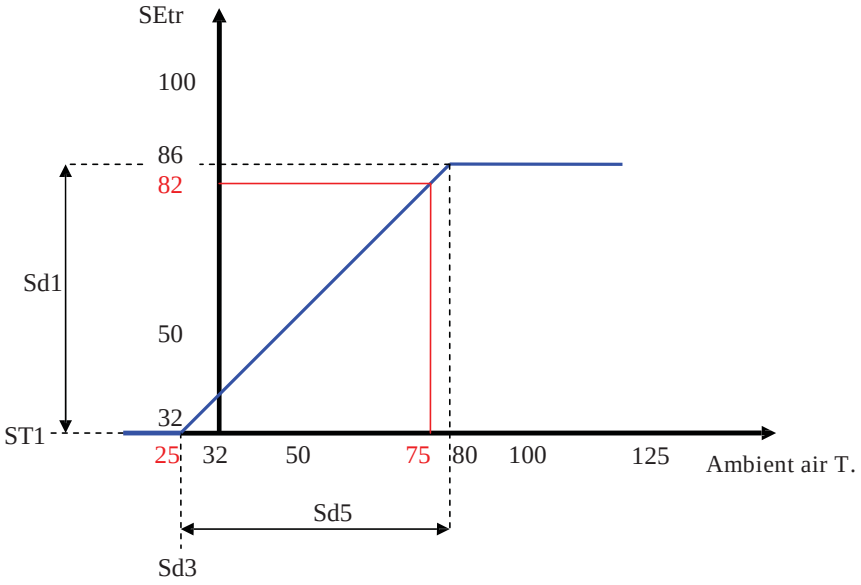

7.8 How to display the internal values of acircuit

NOTE

This chapter is not applicable to single circuit units.

In normal operating mode circuit no. 1 is always displayed by default.

To switch from one circuit to another use the ⌃ or ⌄ buttons to select an identification label within a circuit and press the SET button.

The data in this manual are not binding and they can be modified by the manufacturer without notice. **Reproduction of this manual is strictly prohibited**

7.9 Functions menu button "Menu"

Access to Functions Menu enables the user to:



ALrM function	Display and reset active alarms (see 7.11.1).
ALOG function	Display and clear the alarms log (see 7.11.27).
UPL function	Upload instrument parameters to the smart key (see 7.13).
CrEn function	Enable / disable operation of a single circuit
COEn function	Enable / disable operation of a single compressor
COSn function	Display and reset the number of starts of each compressor
Hour function	Display and reset the running hours of the controlled loads
Cond function	Display the percentage of operation of the proportional outputs for control of the condensing fans speed
uS function	Display the percentage of operation of the proportional outputs (if present)
dF function	Display the time remaining before the start of the defrost cycle (heat pumps only).

7.9.1 CrEn - Enable or disable the single circuit

With the **CrEn** submenu the operation of a single circuit can be disabled for maintenance purposes or to isolate it in the event of malfunctions.
Proceed as follows:

- Open the functions menu by pressing menu
- With the ▲ or ▼ buttons select the function **CrEn** on the lower display;
- Press SET. The lower display shows **Cr1E** while the upper display shows **En**;
- Use the ▲ or ▼ buttons to display the label **Cr1E** or **Cr2E**;
- Press the SET button for 3 seconds in correspondence with label **Cr1E** or **Cr2E**. The upper display shows **En** in flashing mode;
- Use the ▲ or ▼ buttons to select label **diS** (circuit operation disabled) or **En** (circuit operation enabled);
- Press SET to confirm the set function and proceed to the next circuit (only the loads associated with the circuit are disabled);

To exit the **CrEn** function and return to normal display mode press menu or wait for the time-out.
In normal operation if one of the circuits is set to **diS** the lower display shows a flashing label alternated with the parameter shown at that time.
If circuit 1 is in **diS** mode the label shown on the lower display is **b1dS** = circuit 1 disabled.
If circuit 2 is in **diS** mode the label shown on the lower display is **b2dS** = circuit 2 disabled.

NOTE

*Label **b2dS** is present only on units with two refrigerant circuits.*

ATTENTION

*The **CrEn** function is enabled also on single circuit units. If you proceed to disable the only circuit present on these units, the unit will suspend its entire cooling capacity.*

7.9.2 COEn - Enable or disable the single compressor

With the **COEn** submenu the operation of a single compressor within a circuit can be disabled for compressor maintenance purposes or to isolate it in the event of malfunctions.
The compressor status labels in the **COEn** function are:

- **CO1E** = operating status of compressor no. 1;
- **CO2E** = operating status of compressor no. 2;
- **CO3E** = operating status of compressor no. 3 (only two circuit units);
- **CO4E** = operating status of compressor no. 4 (only two circuit units);

To enable or disable the compressors proceed as follows:

- Open the functions menu by pressing menu
- With the ▲ or ▼ buttons select function **CrEn**
- Press SET; the lower display shows **CO1E** while the upper display shows **En**
- Use the ▲ or ▼ buttons to select the required label on the lower display. The upper display shows **En**
- Press SET for 3 seconds in correspondence with the label identifying the compressor to be disabled
- The upper display shows flashing **En**; use ▲ or ▼ to select the **diS**(compressor operation disabled) or **En** (compressor operation enabled) function
- Press SET to confirm the selected function and proceed to the next compressor

To exit the **COEn** function and return to normal display mode press menu or wait for the time-out.

7.9.3 COSn – Display and reset the number of compressor starts

The number of compressor starts can be viewed in the **COSn** submenu. The labels displayed are:

- **C1S** compressor 1 starts
- **C2S** compressor 2 starts
- **C3S** compressor 3 starts
- **C4S** compressor 4 starts

The number of starts is displayed in the lower display with a resolution of 10 starts. For example, if the number 2 is displayed, the compressor starts are 20 in number.
To display the number of starts proceed as follows:

- Open the functions menu by pressing menu
- With the ▲ or ▼ buttons select the function **COSn**
- Press SET. The label of the single load **C1S** is shown on the upper display; the lower display shows the number of starts multiplied by 10.
- With buttons ▲ or ▼ display all the configured compressors.

To return to normal display mode press menu or wait for the time-out.
To reset the number of compressor starts proceed as follows:

- Open the functions menu by pressing menu
- In function **COSn** use ▲ or ▼ to select the label **C1S** or **C2S** or **C3S** or **C4S**.
- Press SET for 3 seconds in correspondence with load **C1S** or **C2S** or **C3S** or **C4S**. The lower display now shows the number of starts in flashing mode (reset in progress) and then the value “0” indicating that the number has been reset.
- At this point the starts of the next compressor are displayed.

To exit the reset function and return to normal display mode press menu or wait for the time-out.

7.9.4 Hour - Display and reset the running hours of the loads

In the Hour submenu you can display the running hours of each compressor and also of the water pump. The labels displayed are:

- **CO1H** compressor 1 running hours
- **CO2H** compressor 2 running hours
- **CO3H** compressor 3 running hours
- **CO4H** compressor 4 running hours
- **EP1H** evaporator water pump running hours
- **EP2H** evaporator second water pump running hours

As for the number of starts, the running hours are shown on the upper display with a resolution of 10 hours.
To view the running hours proceed as follows:

- Open the functions menu by pressing menu
- With the ▲ or ▼ buttons select the **Hour function**
- Press SET. The label of the single compressor is shown on the lower display; the upper display shows the number of running hours multiplied by 10. The 🕒 icon will be illuminated.
- With buttons ▲ or ▼ display all the configured compressors.

To return to normal display mode press menu or wait for the time-out.
To reset the running hours proceed as follows:

- Open the functions menu by pressing menu
- In the **Hour** function use ▲ or ▼ to select the label **CO1H** or **CO2H** or **CO3H** or **CO4H** or **EP1H** or **EP2H**

The data in this manual are not binding and they can be modified by the manufacturer without notice. **Reproduction of this manual is strictly prohibited**

- Press SET for 3 seconds in correspondence with the compressor label **CO1H** or **CO2H** or **CO3H** or **CO4H** or **EP1H** or **EP2H**; the upper display will show the running hours in flashing mode (reset in progress) followed by 0 to confirm that the value has been reset, and then progresses to the next load.

To exit the reset function and return to normal display mode press menu or wait for the time-out.

7.9.5 Cond - Display of percentage / number of condensing steps

In the functions menu you can view the working percentages of the fans proportional output.
Cnd1 Condensing fans control proportional output.
Proceed as follows to display:

- Open the functions menu by pressing menu
- With the ▲ or ▼ buttons select the **Cond function**
- Hold down button SET. The lower display shows **Cnd1**, the upper display shows the work percentage.

To return to normal display mode press menu or wait for the time-out.

In dual circuit units, to display the number of fan steps activated open the functions menu by pressing menu:

- With the ▲ or ▼ buttons select the **Cond function**
- Press SET. The lower display shows **Cnd1**, the upper display shows the number of steps activated.

Use ▲ or ▼ to select the label **Cnd1** or **Cnd2** on the lower display; the upper display shows:

To return to normal display mode press menu or wait for the time-out.

7.10 uS - Tank heater probe display

The temperature / pressure value of the probes that control the auxiliary outputs can be displayed in the functions menu.
FUNCTION **uS** display of temperature / pressure value; identification label in function **uS**:

- **uSt1** value measured by circuit 1 auxiliary probe
- **uSt2** value measured by circuit 2 auxiliary probe
- To display the probe values:
- With the ▲ or ▼ buttons select the **uS** function and press SET.
- The lower display will show the label **uSt1** (if the auxiliary probe is configured for temperature) or **uSP1** (if the auxiliary probe is configured for pressure); the upper display will show the measured temperature / pressure value.
- Use ▲ or ▼ to display the measured pressure value of auxiliary output 2, if present.
- To return to normal display mode press menu or wait for the time-out.

7.11 Alarms

The electronic controller manages the display, reset and logging of a large number of alarms.

7.11.1 Alarms display and reset (ALrM function)

ATTENTION

With this procedure you can reset all the alarms except for the compressor thermal cut-out alarms for which the password will be required: 14.

To open the functions menu proceed as follows:

- Open the functions menu by pressing menu
- With the ▲ or ▼ buttons select the **ALrM** function
- Press SET.
  If no alarms are present, pressing SET is not enabled.
- The lower display shows the label with the alarm; the upper display, if the alarm displayed is resettable, shows the label **rSt** or **no** if the alarm condition is still present.
- Pressing SET in correspondence with label **rSt** resets the alarm and the system goes to the next one; if this too is resettable, press SET to reset it and go to the next one.
- If you want to scroll through all the alarms present press ▲ or ▼.

To exit the **ALrM** function and return to normal display mode press menu or wait for the time-out.

With the unit in **StbY** (stand-by) and the E LED flashing, press menu and scroll with ▲ or ▼ to select the **ALrM** function and press button SET to display the active alarm.

7.11.2 How to mute the buzzer

The controller emits an audible signal to alert the operator to the presence of alarms (buzzer).
The buzzer is muted in the following ways:

- **Automatic muting:** the buzzer is muted when the situation that caused the alarm ceases.
- **Manual muting:** press and release one of the buttons; the buzzer will be muted even if the alarm condition persists.

7.11.3 General alarms list

Alarm codes and indications are composed of letters and numbers that identify different alarm types.
The first letter of the alarm label identifies the type as follows:

- Letter **A** = unit alarm
- Letter **b** = circuit alarm
- Letter **C** = compressor alarm

The following tables contain a description of the alarms managed by the electronic circuit board. Some of the alarms mentioned may not be referable to all unit models.

COD. alarm	Alarm Description	Alarm reset	Alarm Trip	Outputs block			
				Compressor	Pump	Fan	Heaters
AP1	Probe **PB1** fault alarm	A	I	X		X	X(1)
AP2	Probe **PB2** fault alarm	A	I	X		X	X(1)
AP3	Probe **PB3** fault alarm	A	I	X		X	X(1)
AP4	Probe **PB4** fault alarm	A	I	X		X	X(1)
AP5	Probe **PB5** fault alarm	A	I	X		X	X(1)
AP6	Probe **PB6** fault alarm	A	I	X		X	X(1)
APE1	Probe **PB1**.. Probe **Pb8** of I/O expansion	A	I	X	X	X	
APE2	Probe **PB1**.. Probe **Pb8** of I/O expansion	A	I	X	X	X	
APE3	Probe **PB1**.. Probe **Pb8** of I/O expansion	A	I	X	X	X	
APE4	Probe **PB1**.. Probe **Pb8** of I/O expansion	A	I	X	X	X	
APE5	Probe **PB1**.. Probe **Pb8** of I/O expansion	A	I	X	X	X	
APE6	Probe **PB1**.. Probe **Pb8** of I/O expansion	A	I	X	X	X	
APE7	Probe **PB1**.. Probe **Pb8** of I/O expansion	A	I	X	X	X	
APE8	Probe **PB1**.. Probe **Pb8** of I/O expansion	A	I	X	X	X	
AEFL	Evaporator water pump pressure switch or level sensor alarm	A/M	R	X	X(2)	X	X
AtE1	Evaporator water pump thermal cutout	M	I	X(3)	X	X	X(4)
AtE2	Evaporator second water pump thermal cutout	M	I	X(3)	X	X	X(4)
AEE	EEprom alarm	M	I	X	X	X	
ALSF	Phase sequence alarm (NOT USED)	A	I	X	X	X	X
ASLA	LAN communication with I/O expansion alarm	A	I	X	X	X	
ALc1	Phase monitor alarm	A/M	I	X	X	X	
AEUn	Evaporator inlet high temperature unloading indication	A	R				
ACF1	Configuration alarm	A	I	X	X	X	
b(n)HP	Circuit (n) high pressure switch (EB 250 - 900 models only)	A/M	R	X		X	
b(n)HP	Circuit (n) high pressure switch and/or compressor thermal alarm (EB 1200 - 1600 models only)	A/M	R	X		X	
b(n)LP	Circuit (n) low pressure switch	A/M	R	X		X	
b(n)AC	Anti-freeze in chiller circuit (n)	A/M	R	X		X	
b(n)Ac	Signaling of anti-freeze in chiller circuit (n)	A/M	R				
b(n)hP	High condensing pressure transducer circuit (n)	M	I			X	
b(n)HP	Low condensing pressure - (evaporation with low pressure transducer) transducer circuit (n)	A/M	R	X			
AEht	Evaporator water inlet high temperature alarm	M	I	X		X	
b1tF	Circuit 1 fans thermal alarm	M	I	X			
b(n)rC	Circuit (n) recovery disabled signaling	A	I				
C(n)tr	Compressor (n) thermal alarm with **AL47** = 0 – 1	M	I	X			

1= If probe configured for anti-freeze - water heater control and **Ar10** = 0.
2= With manual reset alarm.

The data in this manual are not binding and they can be modified by the manufacturer without notice. **Reproduction of this manual is strictly prohibited**

3= Compressors stopped with only 1 water pump configured or with 2 water pumps configured and both in thermal alarm state.
4= water heater elements off with only 1 water pump configured or with 2 water pumps configured and both in thermal alarm status (in this case the water heater elements are switched on only by the evaporator anti-freeze protection setpoint).
(n)= identifies circuit 1 or circuit 2
Key:
A= automatic
M= manual
R= delayed
I= instantaneous

7.11.4 Indications table

CODE Alarm	Description Alarm	Comp.	Heaters Anti-freeze water heater	Elements support	Pump Evap. Deliv. Fan	Cond. pump	Cond. fan Cir1 Cir2	Auxiliary relay
AEUn	Evaporator unloading indication							
b(n)Cu	Unloading indication from condensing press. temp. circuit (n)							
b(n)Eu	Unloading indication from evaporator low temp. circuit (n)							
C(n)Mn	Compressor (n) maintenance							
AEP1	Evaporator water pump maintenance							
AEP2	Second evaporator pump maintenance							
noL	Indication of communication loss between keypad or controller 2 remote terminals configured with same address							
Atr(n)	Remote terminal alarm							

7.11.5 Probe faulty

Display labels meaning	**AP1** probe **PB1÷AP6** alarm probe **PB6 alarm**
Cause of trip	Probe configured and converted value off range
Reset	Probe not configured or converted value within range
Reset	Automatic
Icon	Flashing
Action	Alarm relay + buzzer activated

7.11.6 High pressure switch alarm (EB 250 – 900 models only)

Display labels meaning	**b1HP** (circuit 1 high pressure digital input) **b2HP** (circuit 2 high pressure digital input)
Cause of trip	With unit in ON status and circuit high pressure switch input active
Reset	Input inactive
Reset	Reset is always manual
Icon	Flashing E
Action	Alarm relay + buzzer activated

7.11.7 High pressure switch alarm and/or compressor thermal alarm (EB 1200 – 1600 models only)

Display labels meaning	**b1HP** (circuit 1 high pressure digital input) and/or compressor thermal alarm **b2HP** (circuit 2 high pressure digital input) and/or compressor thermal alarm
Cause of trip	With unit in ON status and circuit high pressure switch input active and/or compressor thermal alarm
Reset	Input inactive
Reset	Reset is always manual
Icon	Flashing E
Action	Alarm relay + buzzer activated

7.11.8 Low pressure switch alarm

Display labels meaning	**b1LP** (circuit 1 low pressure digital input) **b2LP** (circuit 2 low pressure digital input)
Cause of trip	With low pressure switch input of active circuit The alarm is not signaled: 1. On compressor starting for time **AL01** 2. If time **AL64** from activation of the digital input has not elapsed
Reset	Input deactivation
Reset	Automatic - becomes manual after **AL05** trips / hour (reset procedure in functions menu)
Icon	Flashing **E**
Action	Alarm relay + buzzer activated

7.11.9 High pressure

Display labels meaning	**b1hP** (circuit 1 high pressure analogue input) **b2hP** (circuit 2 high pressure analogue input)
Cause of trip	Condensing control probe detects value > set **AL09**
Reset	Condensing control probe detects value < set **AL09** - differential **AL10**
Reset	Reset is always manual
Icon	Flashing **E**
Action	Alarm relay + buzzer activated

7.11.10 Low pressure

Display labels meaning	**b1lP** (circuit 1 low pressure analogue input) **b2lP** (circuit 2 low pressure analogue input)
Cause of trip	The alarm is generated when the evaporation pressure alarm reads a pressure value < set **AL03** When the compressor is started the alarm is not generated for time **AL01**.
Reset	If the evaporation control probe measures pressure > set **AL03** + differential **AL04**
Reset	Automatic - becomes manual after **AL05** trips / hour (reset procedure in functions menu)
Icon	Flashing **E**
Action	Relay + buzzer activated

7.11.11 Anti-freeze alarm

The anti-freeze alarm is reset automatically. It switches to manual reset after 3 trips/hour.
With the unit in Stand-by or OFF the anti-freeze alarm message is tripped in reference to the chiller and heat pump setpoints.

7.11.12 Chiller mode anti-freeze alarm

Chiller Operation	
Display labels meaning	**b1AC** (chiller mode circuit 1 anti-freeze alarm) **b1Ac** (chiller mode circuit 1 anti-freeze alarm indication) With the alarm active and a dual circuit unit both the labels are displayed (**b1AC-b2AC/b1Ac-b2Ac**).
Cause of trip	In operation and in stand-by remote OFF, if the anti-freeze control probe detects a temperature < set **AL26** for at least **AL28** seconds.
Reset	Anti-freeze control probe detects a temperature > set **A26** + differential **AL27**.
Reset	Automatic - becomes manual after **AL29** trips / hour (reset procedure in functions menu).
Icon	Flashing **E**
Action	The compressors are stopped and the alarm label is displayed (**b1AC b2AC**) and the Alarm relay + buzzer are activated

The data in this manual are not binding and they can be modified by the manufacturer without notice. **Reproduction of this manual is strictly prohibited**

7.11.13 Water differential pressure switch alarm

Each time the water pump is started the water differential pressure switch alarm is disregarded for time **AL15** to allow the hydraulic circuit to reach steady state conditions. In normal operating conditions, if the pressure switch is in alarm for time **AL17** the compressor is stopped and label **AEFL** is displayed: the water pump continues to run for additional time **AL16** after which, if the pressure switch is still in alarm, the pump is stopped.
At this point the alarm persists with manual reset so it must be reset manually.
Parameter **AL18** is the time for which the pressure switch must not be in alarm in order to allow a reset.

Display labels meaning	**AEFL** (water differential pressure switch or level sensor alarm)
Cause of trip	The alarm is not acknowledged for time **AL15** after starting of the water pump. Alarm signaled if ID active for time **AL17**.
Reset	ID not active for time **AL18**
Reset	Automatic - becomes manual if ID active for time **AL16** counted at expiry of **AL17** (reset procedure in functions menu)
Icon	Flashing Flow!
Action	Alarm relay + buzzer activated only if the water differential pressure switch alarm is active during a normal operating stage.

ATTENTION

Activation of alarm relay + buzzer occurs only if the water differential pressure switch *alarm is active during a normal operating stage. Otherwise exclusively an illuminated signal is generated (flashing icon).*

NOTE

The alarm is always automatic reset with the unit in stand-by or remote OFF (pump stopped).

Water differential pressure switch alarm manual reset:
If the alarm features manual reset, to reset it the operator must open the functions menu (reset procedure in functions menu).

7.11.14 Compressors thermal alarm

Display labels meaning	**C1tr** (compressor 1 thermal alarm) -…**C4tr** (compressor 4 thermal alarm)
Cause of trip	With digital input active. The alarm is not acknowledged for **AL19** after compressor start.
Reset	If ID inactive
Reset	Manual from menu **ALrM** with password request
Icon	Flashing **E**
Action	Alarm relay + buzzer activated

7.11.15 Fan thermal alarm

Display labels meaning	**b1tF** (circuit 1 condensing fan thermal alarm)
Cause of trip	With configured circuit digital input active
Reset	With digital input inactive.
Reset	Manual. (reset procedure in functions menu)
Icon	Flashing **E**
Action	Alarm relay + buzzer activated

7.11.16 High condensing pressure unloading indication in chiller mode

Display labels meaning	**b1Cu** (unloading indication from circuit 1 condenser coil) **b2Cu** (unloading indication from circuit 2 condenser coil)
Cause of trip	In operation if the probe configured as condensing pressure or temperature control detects a value > **CO44**
Reset	• if condensing pressure or temperature measures value < **CO44** - differential **CO45** • with unloading active, after time setting Par. **CO48**
Reset	Automatic
Icon	Flashing E
Action	Alarm relay + buzzer NOT activated

7.11.17 High condensing pressure recovery disabling indication in chiller mode

Display labels meaning	**b1rC** (circuit 1 recovery disabling signal) **b2rC** (circuit 2 recovery disabling signal)
Cause of trip	In operation if the probe configured as condensing pressure control detects a value > set **rC06**
Reset	• If condensing pressure or temperature measures value < set **rc06** - differential **rC07** • From recovery disabling function activated after time set in Par. **rC08**
Reset	Automatic
Icon	Flashing E
Action	Alarm relay + buzzer NOT activated

7.11.18 Evaporator inlet high water temperature unloading indication

Display labels meaning	**AEun** (unloading from evaporator indication)
Cause of trip	operation if evaporator water inlet temperature measured is > set **CO40** for time set in Par.**CO42**
Reset	• If the measured water temperature is < set **CO40** - differential **CO41** • From unloading function active after time set in Par. **CO43**
Reset	Automatic
Action	Alarm relay + buzzer NOT activated

7.11.19 Evaporator water pump group thermal alarm

Display labels meaning	**AtE1** (evaporator water pump thermal cutout) **AtE2** (evaporator second pump thermal cutout)
Cause of trip	ID configured as evaporator water pump thermal cutout active ID configured as evaporator second pump thermal cutout active
Reset	With ID inactive
Reset	Manual. (reset procedure in functions menu)
Icon	Flashing E
Action	Alarm relay + buzzer activated

7.11.20 Phase monitor alarm

Display labels meaning	**ALc1**
Cause of trip	Phase monitor alarm
Reset	Phase monitor not active alarm
Reset	automatic - becomes manual after **AL42** trips / hour (reset procedure in functions menu). Recorded in alarms log exclusively with manual reset.
Icon	Flashing E
Action	Alarm relay + buzzer activated

The data in this manual are not binding and they can be modified by the manufacturer without notice. **Reproduction of this manual is strictly prohibited**

7.11.21 Compressors maintenance alarm

Display labels meaning	**C1Mn** (compressor 1 maintenance request) **C2Mn** (compressor 2 maintenance request) **C3Mn** (compressor 3 maintenance request) **C4Mn** (compressor 4 maintenance request)
Cause of trip	Compressor running hours > programmed hour meter setting
Reset	Running hours reset (in functions menu, “Hour” function, hold down “set” button for several seconds)
Reset	Manual
Icon	Flashing **E**
Action	Alarm relay + buzzer activated

7.11.22 Pumps maintenance alarm

Display labels meaning	**AEP1** (evaporator water pump maintenance request) **AEP2** (evaporator second pump maintenance request)
Cause of trip	Compressor running hours > programmed hour meter setting
Reset	Running hours reset (in functions menu, “Hour” function, hold down “set” button for several seconds)
Reset	Manual
Icon	Flashing **E**
Action	Alarm relay + buzzer activated

7.11.23 EEprom alarm

Display labels meaning	**AEE**
Cause of trip	Failed write to Eeprom
Reset	------
Reset	Manual
Icon	Flashing **E**
Action	Alarm relay + buzzer activated

NOTE

*For unit configuration alarms “***ACF1**÷**ACF9***” and “***AC10**÷**AC14***”, contact technical assistance.*

7.11.24 Remote terminal alarm

Display labels meaning	**noL** (no link signaling)
Cause of trip	Incorrect connection between remote terminal and controller or two remote terminals configured as present and both with same HW address (see position of keypads address assignment switch)
Reset	Correct connection - two different HW addresses
Reset	Automatic
Icon	Flashing **E**
Action	Alarm relay + buzzer activated

7.11.25 Remote terminal alarm

Display labels meaning	**Atr1** / **Atr2**
Cause of trip	Remote terminal configured from parameter but not electrically connected
Reset	Correct connection - remote terminal declared absent from parameter
Reset	Automatic
Icon	Flashing **E**
Action	Alarm relay + buzzer activated

7.11.26 Alarm relay / open - collector / buzzer notes

The unit features a general alarm relay that combines all alarms on a single output contact.
The relay is active with the following logic:

ON	With alarms not terminated; With alarms not reset;
OFF	With no alarms; Unit power disconnected

7.11.27 Display and delete the alarms log in the memory (ALOG function)

The function to display the alarm codes is active only if alarms are actually present.

- Enter the functions menu by pressing menu.
- Select the **ALOG** function.
- Press SET.

  If no alarms are present, pressing SET is not enabled.
- The lower display shows the label with the alarm code, while the upper display shows the label "**n**" with a sequential number from 00 to 99.
- Scroll through all the alarms present press ▲ or ▼.

To exit the **ALOG** function and return to normal display mode press menu or wait for the time-out.
The memory has space for 99 alarms. Each alarm stored beyond this number will automatically overwrite the oldest alarm (the alarms are displayed in ascending order from the oldest to the most recent).

- To clear the alarms log enter the functions menu.
- With the ▲ or ▼ buttons select the function **ALOG** on the lower display and press SET.
- Scroll the alarm labels until finding **ArSt** in the lower display. The upper display shows **PASS**.
- Press SET. Enter the deletion password (the password value to reset the alarms log is **14**) and press SET to confirm.
- If the password is correct, the label **ArSt** flashes for 5 seconds to confirm the deletion. After deleting the alarms log the system exits the functions menu automatically and returns to normal display mode.
- If the password is incorrect the message **PASS** appears again. If the correct password is not entered it is any way possible to scroll through the alarms in the memory with ▲ or ▼.

To return to normal display mode press menu or wait for the time-out.

7.12 Programming from keypad

The parameters of the electronic controller are divided into groups subdivided into three levels, namely:

1. USER (**Pr1**);
2. SERVICE (**Pr2**).
3. MANUFACTURER (**Pr3**).

The USER level (**Pr1**) provides access exclusively to the user parameters, the SERVICE (**Pr2**) / MANUFACTURER level (**Pr3**) provides access to parameters concerning unit configuration.
The association of a given parameter with a given level is established in the design stage.

ATTENTION

All levels are password protected.

The USER password is 23.

The data in this manual are not binding and they can be modified by the manufacturer without notice. **Reproduction of this manual is strictly prohibited**

The parameter families, identified by “Labels”, are divided as follows:

LABEL	ACTION
ALL	Displays all parameters
ST	Displays Thermoregulation parameters only
dP	Displays Display Presentation parameters only
CF	Displays Configuration parameters only
SD	Displays dynamic setpoint parameters only
ES	Displays energy saving and starting parameters only (FUNCTION NOT ACTIVE) Displays second setpoint parameters only
CO	Displays Compressor parameters only
US	Displays auxiliary output parameters only
FA	Displays Fan parameters only
Ar	Displays anti-freeze heater parameters only
DF	Displays defrost parameters only
rC	Displays Recovery parameters only
AL	Displays Alarm parameters only
Pr	Password

ATTENTION

*Configuration parameters “**CF**” are editable only with the unit in Stand-by.*

7.12.1 Access to parameters

To enter the parameters menu “**Pr1**” (user level):

1. Press SET + ▽ for 3 seconds. The upper display shows the label “**PASS**”, the lower display shows the label “**Pr1**”.
2. Press SET, the upper display shows flashing “0”.
3. To enter the password use △ or ▽.
4. If the password entered is incorrect, you will be prompted to enter it again. If the password is correct press SET to display the parameters. The upper part of the display shows the first label “**ALL**”.
5. To select the labels press △ or ▽ and then press SET. The lower display shows the label and the code of the first parameter it contains; the upper display shows the associated value.

ATTENTION

Certain parameters may be read-only. If a parameter is read-only LEDs 1 and 2 will flash.

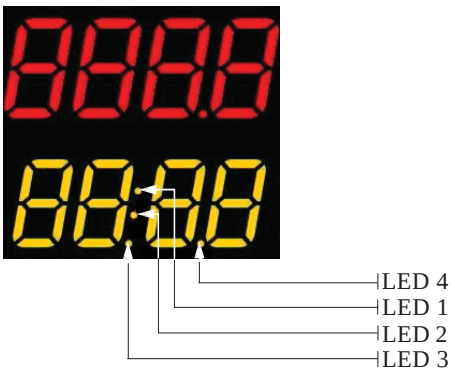

To exit programming mode and return to normal display mode press SET + ▽ simultaneously.

7.12.2 How to change a parameter value

- Enter programming mode;
- Press SET + ▽ simultaneously for 3 seconds
- Select the desired parameter.
- To change the value press SET.
- Change the value with △ or ▽.
- Press SET to store the new value and to go to the code of the next parameter.

To exit, press SET + ▽ when a parameter is displayed, or wait 240 seconds without pressing any buttons.

NOTE

The new value you have entered is saved also when you exit the parameter setting function by waiting for it to time out automatically without pressing SET.

7.13 Use of the hot-key (function UPL)

7.13.1 Programming the board with the hot-key

With instrument off:

- Insert the key.
- Switch on the instrument.
- Data download now starts from the key to the instrument.

During this stage adjustments are blocked and the lower display shows flashing message "**doL**".
At the end of the procedure one of two messages will be shown on the upper display:

- "**End**" if programming was successful (control starts after 30 seconds).
- "**Err**" if programming failed.

In the event of an error the instrument must be switched off and switched on again to repeat the operation or start with normal control (in this case the key must be unplugged when the instrument is off).

7.13.2 Hot-key programming

ATTENTION

Important: the hot-key saves the instrument parameters but it does not program them.

With unit switched on:

- Insert the key.
- Enter the functions menu
- Select the function **UPL** on the lower display

Press SET to start data download from instrument to key.
During this stage the lower display shows flashing message "**UPL**".
At the end of the procedure one of two messages will be shown on the upper display:

- "**End**" If programming was successful
- "**Err**" if programming failed.

To exit the **UPL** function press menu or wait for the time-out (15 sec) to elapse

7.14 Unit adjustment and control

7.14.1 Compressors control

The electronic controller manages compressor start and stops, observing the minimum run times.
The following section describes the two methods of control and rotation.

7.14.2 Choice of compressors control type

The controller features the facility to choose between two temperature control types:

- Proportional
- Neutral Zone (factory setting)

7.14.3 Proportional control

For chillers, proportional control uses the setpoint temperature value as a reference and a deviation value called the differential. When the measured temperature increases the system progressively starts the compressors. When the temperature falls below the differential the compressors are progressively stopped.

The data in this manual are not binding and they can be modified by the manufacturer without notice. **Reproduction of this manual is strictly prohibited**

7.14.4 Compressors proportional control diagram

Compressors regulation operation diagram in chiller mode.

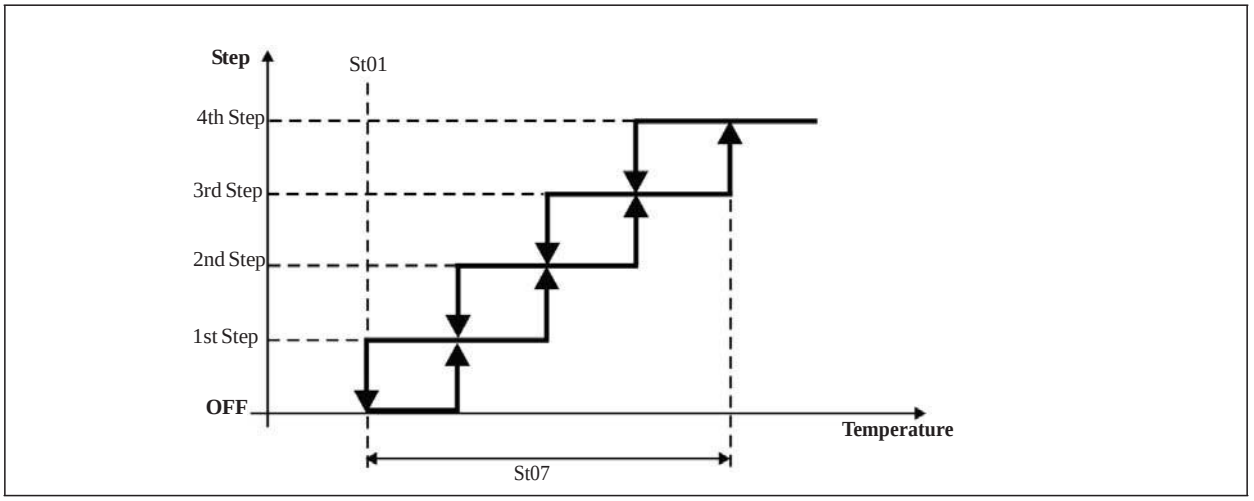

7.14.5 Neutral zone control (factory setting)

In chiller mode, if the reference temperature is ≥ Setpoint+Differential, the unit's compressors are started in sequence in accordance with the starting time lag outside the neutral zone.
In contrast, if the reference temperature is ≤ Setpoint, the unit's compressors are stopped in sequence in accordance with the stopping time lag outside the neutral zone.
Moreover, to guarantee arrival at the temperature setpoint and rotation of the compressors, if the reference temperature is within the neutral zone, the unit's compressors are started in sequence, respecting the starting time lag in neutral zone. Still within the neutral zone, after a programmable time interval the controller stops one compressor and, observing the programmed rotation, starts another. Actions in the neutral zone are performed only if at least one of the unit's compressors is already running.
Compressors regulator operation diagram in chiller mode:

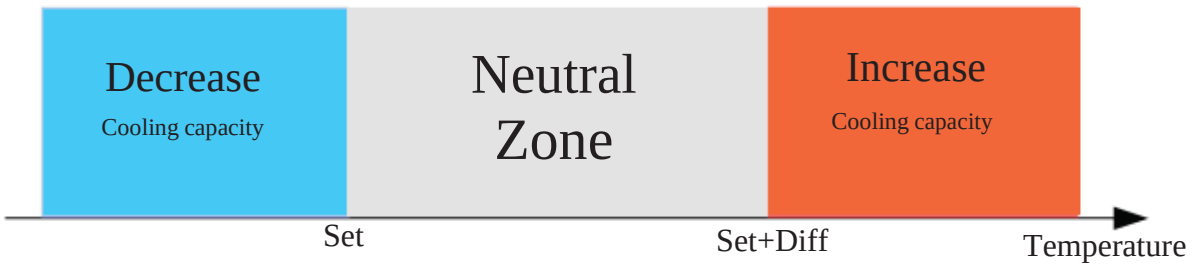

7.14.6 Compressors rotation

For correct operation in the compressors time the electronic controller manages rotation of compressor starts with different logic, selectable by means of a parameter.
The possible choices are:

- **Fixed sequence**: the first compressor to start is always the last one to stop.
- **Rotation by hours**: the compressor that will be started is the one with the lowest number of running hours, while the first to be stopped will be the one, among the running compressors, with the highest number of running hours.
- **Rotation by starts (factory setting)**: the compressor that will be started is the one, among those available, with the lowest number of starts, while the first to be stopped will be the one, among the running compressors, with the highest number of starts.

In two-circuit units it is also possible to choose whether to favor saturation or balancing of the compressors in each circuit.

7.14.7 Forced compressors rotation

For units that frequently operate at partial loads, the controller provides the facility to perform forced compressor rotations. For circuits with more than one compressor although only one of which running, after programmable time the compressor is stopped and starting of the available compressor is forced.

7.14.8 Compressors starting time limitation

If there are several compressors in a circuit but only one is running, after programmable running time the compressor is stopped and another compressor is started (the first free compressor in accordance with the running hours or number of starts).

7.15 Unloading function

This function makes it possible to reduce cooling capacity of the unit when required; it may affect the entire unit or a single circuit and it is achieved by stopping one or more compressors. The unloading types are as follows:

- **Unloading due to high temperature**: having defined an unloading set and differential, if the temperature measured by the probe remains above the set for an activation time, in each circuit one compressor is stopped. If the temperature of the probe becomes lower than or equal to an unloading set less the differential, or if the associated maximum duration has elapsed, the unloading function is deactivated and the compressors are restarted.
- **Unloading due to high pressure (if high pressure transducer is present)**: having defined a set, a differential and an unloading time, if the condensing pressure measured in a circuit is greater than or equal to the set the unloading function is activated in the circuit and then a compressor is stopped in only the circuit involved. The unloading function is deactivated only if the condensing pressure decreases and remains below the unloading set for a preset time or if it falls below set - diff.

7.16 Fans control

On EB units the fans can be controlled in the following ways:

- ON/OFF
- by steps

The selection is made on the basis of the unit configuration.

7.16.1 Units configured with “STEP” fans (only models EB 1200 - 1600)

These units are equipped with a pressure transducer located on the refrigerant compressor discharge pipeline.
On the basis of the pressure read by the transducer, the electronic controller manages operation of the fans according to ON-OFF logic, i.e. supplying or disconnecting power to the fans.

7.16.2 Fan control diagrams

The following diagram illustrates the fans STEP control logic in accordance changes in condensing pressure.
STEP diagram **(models EB 1200 - 1600):**

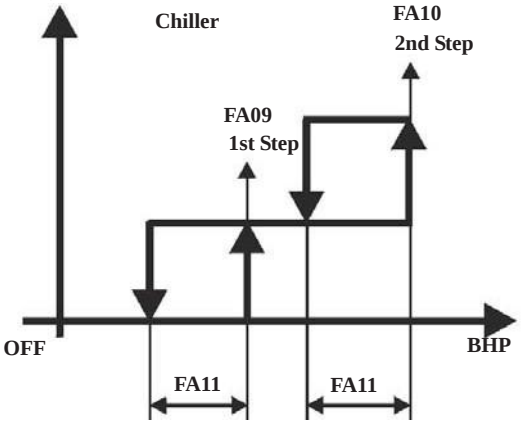

7.17 Hydraulic unit

The circulator pump is only installed on request; in general terms the following configurations are possible:

- Without pump
- Single pump

When the unit is powered on the pump (if installed) starts and continues to run until the unit is set to OFF.

NOTE

With configuration “without pump” there is a provision for an external pump.

The data in this manual are not binding and they can be modified by the manufacturer without notice. **Reproduction of this manual is strictly prohibited**

7.18 Anti-freeze pump management (if ambient probe is installed)

The pumps installed in the unit can be started in anti-freeze mode to prevent the formation of ice in the unit's hydraulic circuit. If the unit is powered off and the selected reference temperature is below the programmed setpoint, one of the pumps is started. The pump is stopped if the temperature increases above the setpoint + differential, in accordance with the following diagram:

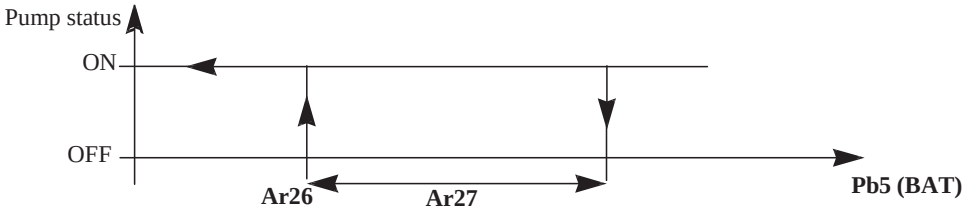

7.19 ModBus

The supervision system provides the facility to monitor and act on certain of the unit's parameters by means of a remote device using the RS485 port. The MODBUS communication mode for the controller features the following characteristics:
Baud Rate = 9600 bps
Data Bit = 8 bit
Parity = None
Stop Bit = 1
Start/stop= 4milliseconds of silence (approximately 3 characters)
Minimum time-out = 500 ms
For further information refer to the specific manual.

7.20 Automatic restart

In case of a power loss, when power is restored the unit will be ON if it was ON at the time of power loss, and OFF if it was OFF.

7.21 Parameters description-settings

The following is a list of all the programmable parameters complete with their associated access levels.
U= User level

ATTENTION

Ensure these instructions are observed in full to avoid incorrect operation of the unit.

7.21.1 Description of parameters

Parameter	Level	Description	Min.	Max.	UM	Resolution
		Thermoregulator				
ST01	U	Chiller setpoint. Enables setting of the working setpoint in chiller mode.	**ST02**	**ST03**	°C °F	Dec Int
ST02	U	Chiller minimum set. Establishes the minimum limit that can be utilized to set the chiller working setpoint.	-50.0 -58	**ST01**	°C °F	Dec Int
ST07	U	Control steps activation band in chiller mode.	0.1 0	25.0 45	°C °F	Dec Int
Pr1	U	User password	0	999		
		Display message				
		Forced display message				
		Remote terminals display forced presentation				
		Display presentation in STD-BY				
Pr1	U	User password	0	999		
		Unit				
		Compressors				

Parameter	Level	Description	Min.	Max.	UM	Resolution
Analogue inputs						
Probes offset						
Digital inputs						
Relay outputs						
Condensing proportional outputs						
Modulating outputs						
Remote terminal						
CF54	U	Configuration of remote terminal no. 1: 0= Absent 1= On board NTC probe 2= Without on board NTC probe	0	2		
Operating logic						
Chiller / heat pump mode selection						
Automatic change-over						
Unit of measurement selection						
Mains frequency selection						
CF63	U/S	Mains frequency selection: 0= 50 Hz 1= 60 Hz 2= Continuous power input (to use if the PWM outputs for control of the condensing fans are not used) **ATTENTION** *Parameter visible and editable only in dual frequency models.*	0	2		
Serial address						
CF64	U	Serial address.	1	247		
Temperature control of compressors with different cooling capacity						
Compressors operation enabling						
Enabling of units with hybrid exchangers						
Buzzer enabling						
Chiller mode						
I/O expansion enabling						
Electronic expansion valve driver enabling						
I/O expansion configuration						
I/O expansion probes offset						
I/O expansion digital inputs						
I/O expansion relay inputs						
I/O expansion proportional outputs						
Modulating outputs						
Pr1	U	User password	0	999		
Dynamic setpoint						
Sd01	U	Dynamic setpoint max increase in chiller mode Establishes the maximum variation of the working setpoint in chiller mode.	-30.0 -54	30.0 54	°C °F	Dec Int
Sd03	U	Dynamic setpoint ambient air temperature setting in chiller mode.	-50.0 -58	110.0 230	°C °F	Dec Int
Sd05	U	Dynamic setpoint ambient air temperature differential in chiller mode.	-30.0 -54	30.0 54	°C °F	Dec Int
Pr1	U	User password	0	999		
Energy saving						
Pr1	U	User password	0	999		

The data in this manual are not binding and they can be modified by the manufacturer without notice. **Reproduction of this manual is strictly prohibited**

Parameter	Level	Description	Min.	Max.	UM	Resolution
Compressors plant						
Compressor						
Capacity controls (INACTIVE FUNCTION)						
Compressor starting						
Compressors rotation - balancing - temperature control						
Evaporator water pump						
CO19	U	No. of hours for forced rotation of evaporator pumps.	0	999	10 Hours	10 Hours
Condenser water pump						
Maintenance of loads						
Pump down						
Evaporator unloading						
Condenser unloading						
Compressors liquid injection function						
Management of resources in neutral zone operation						
Evaporator water low temperature unloading						
Time controlled pump down						
Compressor with modulating control						
Compressor forced rotation function						
Maintenance of loads						
Unit capacity control						
Pr1	U	User password	0	999		
Circuit 1 auxiliary relay						
Circuit 2 auxiliary relay						
Auxiliary 0...10V proportional output 1						
Auxiliary 0...10V proportional output 2						
Modulating output minimum value						
Modulating evaporator pump						
Auxiliary outputs enabling						
Pr1	U	User password	0	999		
Condensing fans						
Operation in chiller mode						
Operation in heat pump mode						
Hot start						
3-4 Fans step (chiller mode operation)						
3-4 Fans step (heat pump mode operation)						
Pre-ventilation in heat pump mode						
Pr1	U	User password	0	999		
Anti-freeze - support - water heater elements						
Water heater function						
Water heater operation in chiller mode						
Water heater operation in heat pump mode						
Anti-freeze alarm						
Evaporator water pump operation with anti-freeze alarm						
Pr1	U	User password	0	999		
Defrosting						
Forced defrost						
Defrost mode						
Defrost start end from analogue input						
Delivery fan operation in defrost						
Defrost with condensing fans						

Parameter	Level	Description	Min.	Max.	UM	Resolution
		Hybrid exchangers				
		Dynamic setpoint in defrosting				
Pr1	U	User password	0	999		
		Heat recovery				
Pr1	U	User password	0	999		
		Domestic hot water				
Pr1	U	User password	0	999		
		Alarms				
		High alarm				
		Compressor oil alarm				
		Water differential pressure switch alarm				
		Compressors thermal alarm				
		Pump-down alarm				
		Anti-freeze alarm in chiller mode				
AL26	U	Chiller anti-freeze alarm set, provides facility to set a temperature value below which the anti-freeze, low ambient air temperature (air/air unit), low air outlet temperature (air/air unit) alarm is tripped (from **AL24** to **AL25**).	**AL24**	**AL25**	°C °F	Dec Int
		Anti-freeze alarm in heat pump mode				
		Compressors discharge high temperature				
		Generic unit shut-down alarm				
		Alarm relay				
		Alarms log - compressors thermal alarm reset password				
		Compressor oil alarm management				
		Unit generic block / signaling alarm no. 2				
		High pressure alarm reset				
		Condenser side water pump flow switch alarm				
		Evaporator water inlet high temperature alarm				
		Domestic hot water pump flow switch alarm				
		Solar panels water pump flow switch alarm				
		Domestic hot water heater thermal alarm				
		Selection of the anti-freeze alarm reset type				
		Domestic hot water pump thermal alarm				
		Compressor oil alarm				
		Compressor thermal alarm				
		Pressure switch alarm reset type				
Pr1	U	User password	0	999		

The data in this manual are not binding and they can be modified by the manufacturer without notice. **Reproduction of this manual is strictly prohibited**

7.21.2 Parameters setting

The following table shows the setting of controller parameters on the basis of the various configurations established for the entire range of units.
Certain functions may not be active or available on all models (hence the associated parameters may not be visible on the controller).
If the parameter is not present in the “Value” column, refer to the options listed on the right hand side of the table.

EB 250 - 550									
				Freeze protection		Fans control			
Parameter	Value	UM	Level	No	Yes	ON/OFF	Step (EB 250 - 550)	Phase chopping control	Electronic control
ST01	45	°F	U						
ST02	41	°F	U						
ST07	4	°F	U						
CF54	See Ch. 7.21.3	--	U						
CF63(*)	1	--	U						
CF64	1	--	U						
Sd01	0	°F	U						
Sd03	39	°F	U						
Sd05	86	°F	U						
CO19	4	10 Hours	U						
AL26	39	°F	U						

(*) Parameter visible only on dual frequency version.

EB 600 - 900														
				Freeze protection		Fans control			Hydraulic unit					
Parameter	Value	UM	Level	No	Yes	ON/OFF	Phase chopping control	Electronic control	Sp	P3	P5	P3 + P3	P5+ P5
ST01	45	°F	U										
ST02	41	°F	U										
ST07	4	°F	U										
CF54	See Ch. 7.21.3	--	U										
CF64	1	--	U										
Sd01	0	°F	U										
Sd03	39	°F	U										
Sd05	86	°F	U										
CO19	4	10 Hours	U										
AL26	39	°F	U										

EB 1200 - 1600														
				Freeze protection		Fans control			Hydraulic unit					
Parameter	Value	UM	Level	No	Yes	Step	Phase chopping control	Electronic control	Sp	P3	P5	P3 + P3	P5+ P5
ST01	45	°F	U										
ST02	41	°F	U										
ST07	4	°F	U										
CF54	See Ch. 7.21.3	--	U										
CF64	1	--	U										
Sd01	0	°F	U										
Sd03	39	°F	U										
Sd05	86	°F	U										
CO19	4	10 Hours	U										
AL26	39	°F	U										

7.21.3 Parameters dependent on remote terminal kit

Parameter	UM	Level	Remote terminal kit	
			No	Yes
CF54	--	U	0	2

The data in this manual are not binding and they can be modified by the manufacturer without notice. **Reproduction of this manual is strictly prohibited**

CHAPTER 8

OTHER COMPONENTS

8.1 Compressor motor protection

The unit is equipped with an internal motor protection system by means of a power circuit breaker.

8.2 Refrigerant high and low pressure switches

The units are equipped with the following pressure switches:

1. **low pressure switch (LP)**
   This monitors refrigerant compressor suction pressure and will trip to protect the compressor if the pressure falls to potentially hazardous values that could harm the compressor. The pressure switch is of the "automatic reset" type. Alarm **b1LP** or **b2LP** (see chapter "7.11.8 Low pressure switch alarm"), generated by tripping of this pressure switch, can be delayed with respect to start-up of the compressor, to prevent temporary fluctuations in suction pressure or false alarms from interfering with correct operation of the unit. Once the preset time interval has elapsed tripping of this pressure switch will be detected by the electronic control unit, which will display alarm signal **b1LP** or **b2LP** (see chapter "7.11.8 Low pressure switch alarm") and shut down the compressor(s), while the pump (if installed) will continue to run. After the alarm has tripped if the compressor suction pressure increases and exceeds the reset value the pressure switch will reset. The unit can be restarted by following the alarms reset procedure described in Chapter 7 "Electronic controller". If the cause of the pressure switch trip has not been remedied this cycle will be repeated continuously.
2. **high pressure switch (HP)**
   This monitors the refrigerant compressor discharge pressure and prevents it increasing to potentially hazardous values that could harm the compressor and people within the vicinity. The pressure switch is of the "automatic reset" type. Tripping of this pressure switch is read by the electronic controller, which opens the compressor power feeding circuit and displays alarm signal **b1HP** or **b2HP** (see section "7.11.8 Low pressure switch alarm").
   When the compressor discharge pressure decreases and falls below the reset point, the pressure switch resets automatically.
   The unit can then be restarted according to the alarm reset procedure described in Chapter 7 "Electronic controller".
   If the cause of pressure switch activation is not eliminated, this cycle may be repeated continuously.

The LP and HP pressure switches are connected to the refrigerant circuit pipes by means of SCHRAEDER valves (with needle) that prevent the refrigerant from escaping if the pressure switches are to be replaced.
The TRIP and RESET values of the pressure switches depend on the type of refrigerant and are shown in the following table:

Pressure switch	Refrigerant gases	TRIP				RESET			
		bar	PSI	°C	°F	bar	PSI	°C	°F
HP	R410A	41	594.6	64.7	148.5	33	478.6	55.0	131
LP		2.5	36.2	-23.8	-10.8	4	58	-14	6.8

8.3 Fan pressure switches (Models EB 250 - 900)

With fan speed control in ON/OFF mode these units are equipped with a Pressure switch (**FP**) that monitors the refrigerant compressor discharge pressure and is responsible for controlling operation of the fans in ON-OFF mode, i.e. connecting or disconnecting the fans electrical power supply.
The FP pressure switch is connected to the refrigerant circuit pipes by means of SCHRAEDER valves (with needle) that prevent refrigerant from escaping if the pressure switch is to be replaced.
The TRIP and RESET values of the pressure switch depend on the type of refrigerant and are shown in the following table:

Pressure switch	Refrigerant gases	TRIP				RESET			
		bar	PSI	°C	°F	bar	PSI	°C	°F
Axial Fans **FP**	R410A	27	391.6	46.1	115	21	304.5	36.1	97

8.4 Pressure transducers

The models EB 1200 - 1600 are equipped with a high pressure transducer on the refrigerant circuit.
Pressure transducers read the compressors discharge pressure values and control operation of the unit on the basis of the pressure setpoint values set on the electronic controller.
By means of the values read by these transducers the following functions of each circuit can be provided separately:

- high pressure alarm;
- unloading for high pressure;
- measurement of high pressure values.

Therefore, if pressure in one circuit increases with respect to the preset limit value, an alarm signal can be tripped to stop the unit or stop one or more compressors after a programmable time interval.

8.5 Level sensor

All units are equipped with a level sensor. The level sensor is mounted in the tank where it is responsible for signaling low water level conditions. If this problem is detected the sensor sends an alarm signal to the control unit resulting in an immediate shutdown of the chiller.

Adopt all the possible precautions in order to prevent accidental contact with electrically live parts.
The voltage present in the electrical cabinet can reach values that are potentially fatal for humans.

The Amber LED switches on in the presence of water (in normal operating mode) and switches off in the absence of water.

Power on the system; the green LED will switch steady on.

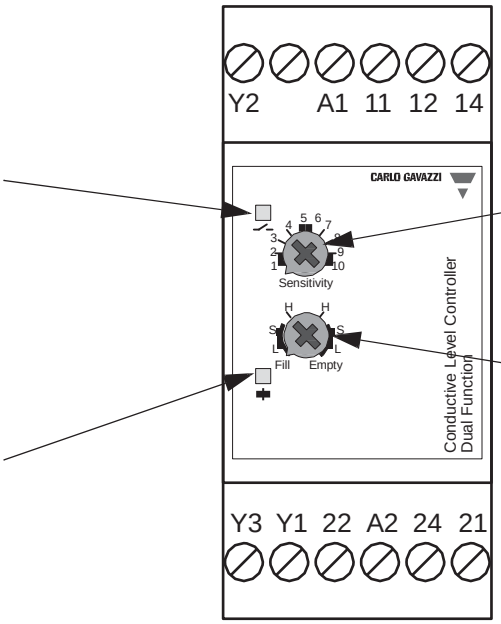

A Sensitivity adjustment

B Sensitivity adjustment range

Adjusting potentiometer **B** changes the sensitivity range of potentiometer **A**

B	**A**
L	250 Ω ÷ 5 KΩ
S	5 KΩ ÷ 100 KΩ
H	50 KΩ ÷ 500 KΩ

ATTENTION

The level sensor has been calibrated to function with 250kOhm sensitivity (position **A***=5,* **B***=H on the "Empty" side).*

Calibration of the level sensor is performed by the manufacturer so it must not be altered.

ATTENTION

There is an anti-tamper sticker over the adjustment potentiometers (A and B).

Damaging this sticker, even partially, will automatically invalidate the warranty.

The data in this manual are not binding and they can be modified by the manufacturer without notice. **Reproduction of this manual is strictly prohibited**

CHAPTER 9

OPERATION AND MAINTENANCE

9.1 Operation

Operation of the unit is fully automatic.
It is not necessary to power the unit off in the absence of a thermal load because it powers off automatically once it reaches the preset water outlet temperature.

9.2 Maintenance

ATTENTION

Before installing or operating these units, ensure that all personnel involved have read and understood Chapter 2 "Safety"

9.3 Access to the unit

ATTENTION

Any task that requires the paneling to be opened must be performed only with the unit powered off and disconnected from the electrical supply.

To access the refrigerant circuit components use the wrench supplied with the unit and open the latches securing front panel (A).
To access the evaporator and hydraulic circuit components use a screwdriver to undo the screws fixing panel (B).
To access the electrical circuit components remove front panel (C).
For models EB 250 - 1600:
To access the components of the refrigerant circuit open the latches securing panel (A). You can also access the refrigerant circuit components by removing the side panels (B). Access to the evaporator and the hydraulic circuit components is possible by removing rear panel (F) or side panels (D), (E).

EB 250 - 550

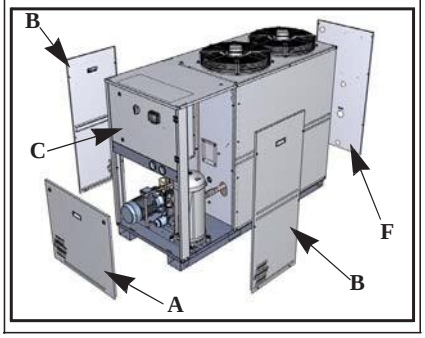

EB 600 - 900	EB 1200 - 1600
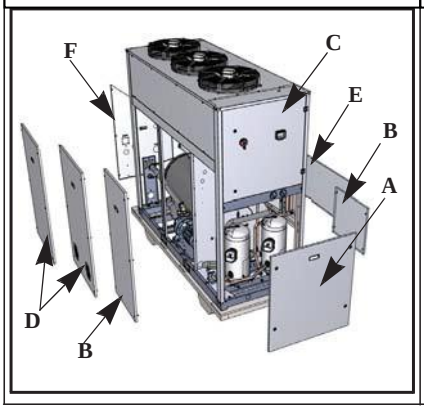	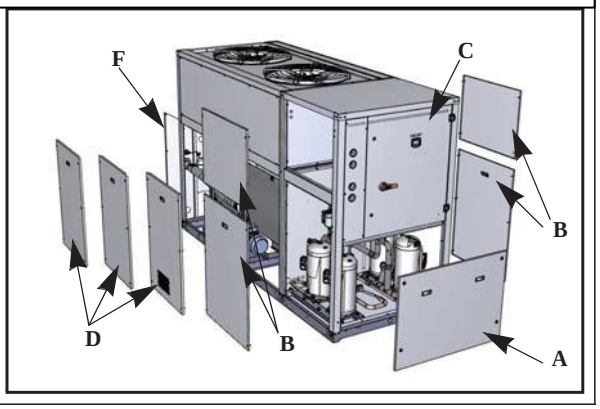

9.4 Draining the process water circuit

This operation is essential when, with the unit stopped and without the anti-freeze heater, the temperature in the place of installation may fall to the point at which the water in the unit could freeze.
To drain the exchangers proceed as follows:

For units with tank and finned core exchanger:

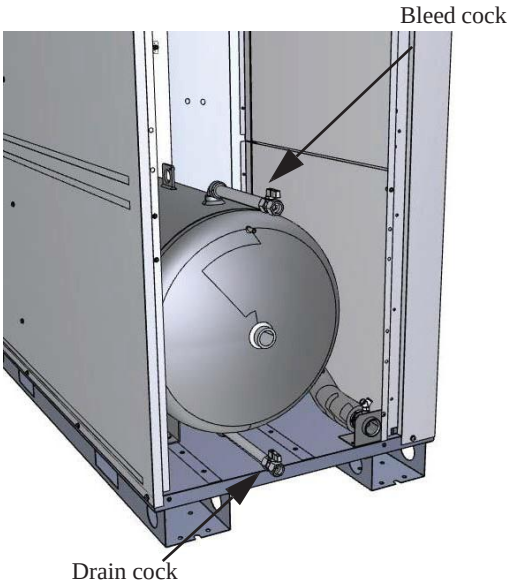

After having emptied the hydraulic system open the bleed and drain cocks and wait until all the water in the storage tank is drained off.

After having emptied the hydraulic system open the drain cocks and the bleed cock and wait until all the water in the storage tank is drained off.

When a pump is installed use special caution to ensure it is emptied, draining off any water that has collected in the impeller.

The data in this manual are not binding and they can be modified by the manufacturer without notice. **Reproduction of this manual is strictly prohibited**

9.5 Maintenance Schedule

OPERATION	1 day	1 month	6 months	1 year
Check control panel display for any alarm signals.	¡			
Check that the water outlet temperature is within the prescribed interval.	¡			
Check that water inlet temperature is in compliance with the value utilized for selection of the unit. **(*)**		¡		
In units complete with a hydraulic unit, check that the pressure in the tank (with pump stopped) is approximately 0.5 bar / 7.2 PSI.		¡		
In units equipped with a hydraulic unit check that the difference between the pump outlet pressure and suction pressure (measured on the pressure gauge with pump stopped) is within the prescribed range and not lower than the pump maximum flow rate value.		¡		
Clean the water filter. The water filter should be cleaned one week after the first start-up of the unit.		¡		
Check that the liquid sight glass is always full or shows a minimum passage of bubbles when the compressor is running.			¡	
Check that the unit's current absorption is within the data plate values. **(*)**			¡	
Carry out visual inspection of refrigerant circuit, looking out for any deterioration of the piping or any traces of oil which might indicate a refrigerant leak.			¡	
Check the condition and safety of piping connections.			¡	
Check the condition and safety of wiring and electrical connections.			¡	
Check that ambient air temperature is commensurate with the value utilized when selecting the dryer. Check that the area in which the unit is installed is well-ventilated.		¡		
Make sure that the fan starts automatically. Thoroughly clean the fins of the condenser with soft brush and/or jet of clean compressed air. Check that the grilles of the dryer are free from dirt and any other obstructions.			¡	
Clean condenser fins with a mild detergent.				¡

(*) For this purpose use specific test meters.

ATTENTION

The above maintenance schedule is based on average operating conditions.

In some installations it may be necessary to increase the frequency of maintenance.

CHAPTER 10

TROUBLESHOOTING

PROBLEM	CAUSE	SYMPTOM	REMEDY
A Tank water outlet temperature **BTWOT** higher than prescribed value.	**A1** Thermal load too high.	**A1.1** **BTWOT** temperature higher than prescribed value.	Restore thermal load to within prescribed limits.
	A2 Ambient temperature too high.	**A2.1** See A1.1.	If the unit is installed in an enclosed place, reduce ambient temperature to within the prescribed limits, for example by increasing room ventilation.
	A3 Condenser fins fouled.	**A3.1** See A1.1.	Clean the condenser fins.
	A4 Front surface of condenser blocked.	**A4.1** See A1.1.	Remove the obstruction from the front surface of the compressor.
	A5 No refrigerant fluid in the circuit.	**A5.1** • See A1.1; • Low evaporation pressure; • Check for the presence of a large number of air bubbles on the liquid sight glass.	Call in a qualified refrigeration engineer to check for leaks and eliminate them. Have the circuit charged by a qualified refrigeration engineer.
	A6 Compressor protection trips.	**A6.1** • The head and the body of the compressor are very hot; • The compressor stops and attempts to restart after a short time (even few seconds).	Call in a qualified refrigeration engineer to check for leaks and eliminate them. Have the circuit charged by a qualified refrigeration engineer.
B Insufficient pressure head (water pressure) at the pump outlet.	**B1** Excessively high water flow rate. The pump is running outside its operating limits (high flow rate, low pressure head, high power consumption).	**B1.1** • Possible increase in outlet temperature **BTOWT** (See A1.1); • With pump installed on unit: pump running - pump stopped pressure difference read on unit pressure gauge is too low; • Possible pump thermal trip.	Restore flow rate to within prescribed limits, for example by partially closing a pump outlet cock. Reset pump thermal cutout and check electrical power consumption.
	B2 See point C.	**B2.1** See point C.	See point C.
	B3 Evaporator clogged by impurities conveyed by the user circuit water.	**B3.1** High temperature difference between water inlet and outlet.	In relation to the type of fouling: • Clean the evaporator by flushing it with a mild detergent suitable for steel, aluminum and copper; • Supply a high flow rate of water in countercurrent conditions. Install a filter upline from the unit.

The data in this manual are not binding and they can be modified by the manufacturer without notice. **Reproduction of this manual is strictly prohibited**

PROBLEM	CAUSE	SYMPTOM	REMEDY
C The water differential pressure switch FLOW or level sensor alarm trips. Alarm displayed: **AEFL**	**C1** Unit upline filter, if present, is clogged.	**C1.1** • Water flow is irregular. Pressure difference between inlet and outlet below 25mbar / 0.36 PSI; • Display shows code **AEFL**; • General alarm relay trip.	Clean the filter upline from the unit, if installed. Perform the alarm reset procedure to restart the unit (see Chapter 7 “Electronic controller”).
	C2 The pump does not work or rotates in the opposite direction (three-phase power supply).	**C2.1** • See C1.1; • General alarm relay trip.	Check the pump electrical supply and, if necessary, invert two of the phases. Perform the alarm reset procedure to restart the unit (see Chapter 7 “Electronic controller”).
	C3 Water inlet-outlet inverted (units without hydraulic kit).	**C3.1** • See C1.1; • General alarm relay trip.	Invert water inlet and outlet. Perform the alarm reset procedure to restart the unit (see Chapter 7 “Electronic controller”).
D High pressure switch (HP) trip (EB 250 - 900 models only) Alarm displayed: **b(n)HP**	**D1** The fan doesn’t work.	**D1.1** • Refrigerant compressor stops; • Display shows code **b(n)HP** alternating with value of **BTOWT**; • General alarm relay trip;	Repair or replace the fan. Where fitted, check the circuit breaker of the fan. Perform the alarm reset procedure to restart the unit (see Chapter 7 “Electronic controller”).
	D2 Ambient air temperature too high.	**D2.1** • Ambient air temperature higher than maximum permitted value; • See D1.1.	If the unit is installed in an enclosed place, reduce ambient temperature to within the prescribed limits, for example by increasing room ventilation. Perform the alarm reset procedure to restart the unit (see Chapter 7 “Electronic controller”).
	D3 Recirculation of warm air due to incorrect installation.	**D3.1** • Condenser cooling air temperature higher than maximum permitted value; • See D1.1.	Change the position of the unit or the position of any nearby obstructions in order to prevent recirculation. Perform the alarm reset procedure to restart the unit (see Chapter 7 “Electronic controller”).
	D4 See A3.	**D4.1** See D1.1.	Clean the condenser fins. Perform the alarm reset procedure to restart the unit (see Chapter 7 “Electronic controller”).
	D5 See A4.	**D5.1** See D1.1.	Remove the obstruction from the front surface of the compressor. Perform the alarm reset procedure to restart the unit (see Chapter 7 “Electronic controller”).
	D6 Thermal load too high.	**D6.1** • Water outlet temperature too high; • Refrigerant compressor stops; • General alarm relay trip.	Restore thermal load to within prescribed limits if possible. Perform the alarm reset procedure to restart the unit (see Chapter 7 “Electronic controller”).

The data in this manual are not binding and they can be modified by the manufacturer without notice. **Reproduction of this manual is strictly prohibited**

PROBLEM	CAUSE	SYMPTOM	REMEDY
E High pressure switch (HP) trip and/or compressor protection trips (EB 1200 - 1600 models only) Alarm displayed: **b(n)HP**	**E1** The fan doesn't work.	**E1.1** • Refrigerant compressor stops; • Display shows code **b(n)HP** alternating with value of **BTOWT**; • General alarm relay trip;	Repair or replace the fan. Where fitted, check the circuit breaker of the fan. Perform the alarm reset procedure to restart the unit (see Chapter 7 "Electronic controller").
	E2 Ambient air temperature too high.	**E2.1** • Ambient air temperature higher than maximum permitted value; • See D1.1.	If the unit is installed in an enclosed place, reduce ambient temperature to within the prescribed limits, for example by increasing room ventilation. Perform the alarm reset procedure to restart the unit (see Chapter 7 "Electronic controller").
	E3 Recirculation of warm air due to incorrect installation.	**E3.1** • Condenser cooling air temperature higher than maximum permitted value; • See D1.1.	Change the position of the unit or the position of any nearby obstructions in order to prevent recirculation. Perform the alarm reset procedure to restart the unit (see Chapter 7 "Electronic controller").
	E4 See A3.	**E4.1** See D1.1.	Clean the condenser fins. Perform the alarm reset procedure to restart the unit (see Chapter 7 "Electronic controller").
	E5 See A4.	**E5.1** See D1.1.	Remove the obstruction from the front surface of the compressor. Perform the alarm reset procedure to restart the unit (see Chapter 7 "Electronic controller").
	E6 Thermal load too high.	**E6.1** • Water outlet temperature too high; • Refrigerant compressor stops; • General alarm relay trip.	Restore thermal load to within prescribed limits if possible. Perform the alarm reset procedure to restart the unit (see Chapter 7 "Electronic controller").
	E7 Thermal load too high with insufficient refrigerant charge in circuit (see also A5).	**E7.1** • The head and the body of the compressor are very hot; • The compressor stops and attempts to restart after a short time (even few seconds). • Compressor thermal protection trips • Display shows message **C(n)tr** • LED of general alarm icon & illuminates.	Call in a qualified refrigeration engineer to check for leaks and eliminate them. Have the circuit charged by a qualified refrigeration engineer.
	E8 Incorrect rotation direction of scroll compressor (three-phase units only).	**E8.1** Refrigerant is not compressed and the unit is unable to provide cooling action.	Invert the position of two phase wires of the power supply.

The data in this manual are not binding and they can be modified by the manufacturer without notice. **Reproduction of this manual is strictly prohibited**

PROBLEM	CAUSE	SYMPTOM	REMEDY
F Low pressure switch (LP) trips Alarm displayed: **b(n)HP**	**F1** No refrigerant fluid in the circuit (see also A5).	**F1.1** • Refrigerant compressor stops; • Display shows code **b(n)LP** alternating with value of **BTOWT** probe; • General alarm relay trip.	Call in a qualified refrigeration engineer to check for leaks and eliminate them. Have the circuit charged by a qualified refrigeration engineer.
	F2 Unit upline filter, if present, is fouled	**F2.1** See F1.1.	Clean or renew the water inlet filter, if installed.
G Compressor protection trips (EB 250 - 900 models only). Alarm displayed: **C(n)tr**	**G1** Thermal load too high with insufficient refrigerant charge in circuit (see also A5).	**G1.1** • The head and the body of the compressor are very hot; • The compressor stops and attempts to restart after a short time (even few seconds); • Compressor thermal protection trips; • Display shows message **C(n)tr**; • LED of general alarm icon & illuminates.	Call in a qualified refrigeration engineer to check for leaks and eliminate them. Have the circuit charged by a qualified refrigeration engineer.
	G2 Incorrect rotation direction of scroll compressor (three-phase units only).	**G2.1** Refrigerant is not compressed and the unit is unable to provide cooling action.	Invert the position of two phase wires of the power supply.
H Display blank and all LEDs switched off with main switch P1 set to ON (I).	**H1** Control circuit fuse has blown.	**H1.1** Using a tester, no voltage reading is obtained on the transformer secondary winding terminals.	Check the possible causes for blowing of the fuse. Change the fuse.
	H2 Abnormal power consumption by one or more of the control board components.	**H2.1** Despite the presence of power on the board terminals the display remains blank and the LEDs remain off.	Try powering off the unit and then powering it on again. If this fails to solve the problem contact an authorized service center.
I Alarm displayed: **AP1÷AP6**	**I1** Probes damaged.	**I1.1** • See problem; • General alarm relay trip.	Check that the temperature probe is correctly connected to the control board terminals and that the cable is undamaged. If necessary replace the temperature probe.
J Alarm displayed: **b(n)Ac**	**J1** Low water outlet temperature. The value set in the relative parameter is lower than the value measured by the probe.	**J1.1** • See problem; • Compressor stops and then restarts; • General alarm relay trip; • LED of general alarm icon & illuminates.	Identify and remedy the problem that caused **BEWOT** temperature to fall to a value below **AL26**.
	J2 Water flow rate too low.	**J2.1** • See problem; • Compressor stops and then restarts; • General alarm relay trip.	Increase the water flow rate.

PROBLEM	CAUSE	SYMPTOM	REMEDY
K Alarm displayed: **AtE1/AtE2** pump thermal cutout.	**K1** The pump thermal cutout has tripped because the water flow rate was too high.	**K1.1** • See problem; • General alarm relay trip; • Refrigerant compressor and pump stop; • The display shows the message **AtE1/AtE2** alternating with the value of the **BTWOT** probe; • Pressure difference read on the pressure gauge with pump running and pump stopped is lower than the available pressure head with pump maximum flow rate.	Reset thermal cutout. Increase hydraulic circuit pressure drop by partially closing, for example, a pump outlet cock.
	K2 The grille through which the pump cooling air flows is obstructed.	**K2.1** • See problem; • General alarm relay trip; • Refrigerant compressor and pump stop.	Reset thermal cutout. Remove obstruction from grille.
	K3 Pump malfunctioning.	**K3.1** • See problem; • General alarm relay trip; • Refrigerant compressor and pump stop; • Pump current input higher than nominal value; • Pump noise levels may be anomalous.	Reset thermal cutout. Renew pump.
L Alarm **ACFx**	**L1** Configuration error.	**L1.1** Code **ACFx** flashing on display and unit shuts down.	Power off the unit and then power it on again. If this doesn't solve the problem, contact the nearest service center.
M Alarm **AEE**	**M1** Processor is not saving data correctly.	**M1.1** • Unit not working; • Code **AEE** flashing on display; • LED of general alarm icon & illuminates.	Power off the unit and then power it on again. If this doesn't solve the problem, contact the nearest service center.

The data in this manual are not binding and they can be modified by the manufacturer without notice. **Reproduction of this manual is strictly prohibited**

Pfannenberg
ELECTRO-TECHNOLOGY FOR INDUSTRY

Pfannenberg Incorporated
68 Ward Road, Lancaster, New York 14086
Phone: 716-685-6866
Fax: 716-681-1521
email: sales@pfannenbergusa.com
www.pfannenbergusa.com

8 8 5 5 0 1 0 3 8

Org 12/15
© 2015 Pfannenberg Incorporated