# FLASHING LIGHT 10 J
# Quadro F12-SIL




Integrated safety in sturdy Quadro-Design.

- To signal dangerous situations in safety-relevant application such as process and plant safety, e.g.
  - leaks/gas warning, high-pressure/overfi lling
  and machine safety, e.g. as
  - start-up warning, muting indication, machine stop delay warning
- By means of integrated self-monitoring of the devices the normative required, regular inspection of warning devices is ensured.
- The warning devices can be implemented in Safety Instrumented Systems (SIS) up to **SIL 2/PLd.**

We would be more than happy to provide all safety-technical key data.

IP 66 / IP 67 — Schutzarten

IK08 — impact-proof housing

+55 °C / –30 °C — operating temperature

10 Years — warranty

EAC

| PRODUCT | | Quadro F12-SIL | | |
|---|---|---|---|---|
| **DATA** | | | | |
| **Rated voltage** | | 230 V | 115 V | 24 V |
| | | AC 50 I 60 Hz | AC 50 I 60 Hz | DC |
| **Operating range** | | 195–253 V | 95–127 V | 18–30 V |
| **Nominal current consumption** | flashing light | 250 mA | 350 mA | 700 mA |
| | diagnostics channel | 100 mA | 100 mA | 65 mA |
| **Alarm contact** | contact version | positively driven contact (1 x NC, 1 x NO) | | |
| | switching current | max. 6 A | | |
| | switching voltage | max. 250 V AC | | |
| | max. switching power (AC) | 1,500 VA | | |
| | recommended min. load | >50 mW | | |
| **Flash rate** | | 1 Hz = 60 flashes/min | | |
| **Flash energy** | | 10 J | | |
| **Light intensity (DIN 5037)** [1] | | 225 cd | | |
| **Max. viewing distance** | | 348 m | | |
| **Operating temperature** | | –30 °C ... +55 °C | | |
| **Storage temperature** | | –40 °C ... +70 °C | | |
| **Relative humidity** | | 100 % | | |
| **Protection system (EN 60529)** | | IP 66 I IP 67, mounting arbitrary | | |
| **Impact resistance (EN 50102)** | | IK08 | | |
| **Protection class** | | II | | |
| **Service life of the light source** | | light emission still 70 % after 8,000,000 flashes | | |
| **Material** | lens | polycarbonate (PC) | | |
| | housing | polycarbonate (PC), RAL 7035 | | |
| **Cable entry** | | 2x M20 bottom side / 2x M20/M32 sideways | | |
| **Connecting terminal** | | cage clamp 0.08–2.5 mm² | | |
| **Mounting** | external lugs | 113 x 153 mm – M5 or 127.1 x 127.1 mm – M5 | | |
| | internal holes | 113 x 113 mm | | |
| **Weight** | | 600 g | | |

[1] with a clear lens

## DIMENSIONS

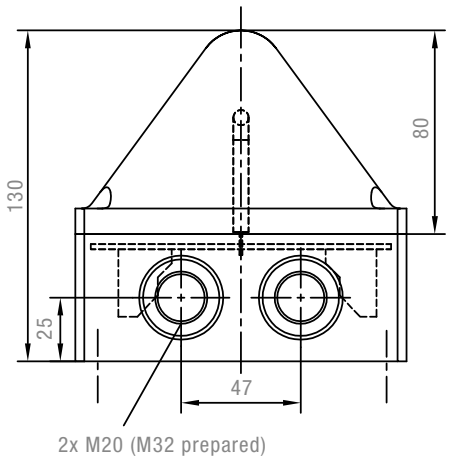


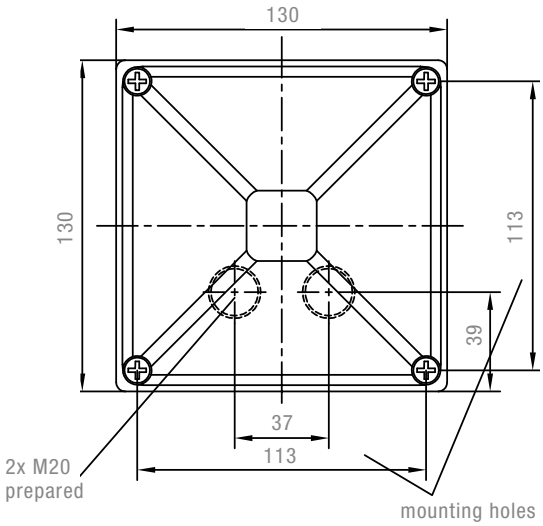


Additional mounting possible via external lugs (included).

## CONNECTION DIAGRAMS

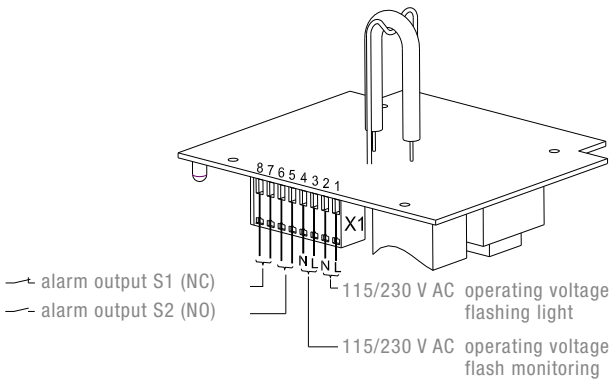


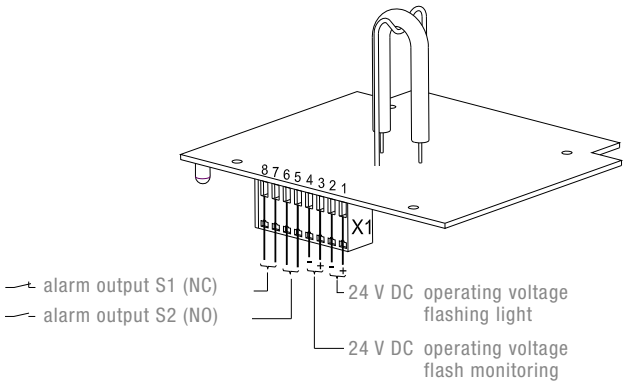


| ARTICLE NO. | Quadro F12-SIL | |
|---|---|---|
| LENS COLOUR | 230 V AC | 24 V DC |
| | 21041103601 | 21041803601 |
| | 21041104601 | 21041804601 |
| | 21041105601 | 21041805601 |

Article numbers for other colours and voltages on request.

## CONFORMITY TO STANDARDS

The visual characteristics of flashing lights conform to the European standard DIN EN 842; **“Machine safety – visual alarm signals”.**
Requirements contained in the DIN EN 981 standard; **“Machine safety – system of acoustic and visual alarm and information signals”,**
can be fulfilled.

The colours “red” for the emergency signal and “yellow” for the warning signal conform to the requirements of IEC 73 / DIN EN 60073 / VDE 0199; **“Coding of display devices and control elements using colours and supplementary means”.**

The visual alarms fulfill the requirements to the functional safety according to:
EN 61508 Functional safety of electrical/electronic/programmable electronic safety-related systems
EN 61511 Functional safety - Safety instrumented systems for the process industry sector
The devices can be used in safety related control systems in accordance with the following standards:
EN ISO 13849-1 Safety of machinery – Safety related parts of control systems – part 1
EN 62061 Safety of machinery – Functional safety of electrical/electronic/programmable electronic safety-related systems