# PYRA FLASHING LIGHT 5 J
# PY X-M-05




- Safe – an incorrect installation is virtually impossible.
- Easy – significantly shorter assembly and installation times.
- Economical – largest possible signaling range due to effective Xenon technology.
- Installation options with external lugs or internal holes.
- Choice of 4 different flash rates via DIP switch.
- Suitable for panel mounting.
- Electronic constant current regulation at 24 V AC/DC devices to avoid load fluctuations.
- Integrated inrush current limitation and undervoltage detection (option).
- Providing full synchronisation on multi-flashing light systems.

| IP 66 | IK08 | +55 °C / –40 °C | EN 54-23 | VdS | 10 Years | EAC | UL |
|---|---|---|---|---|---|---|---|
| protection system | impact-proof housing | operating temperature | SSM version | SSM version | warranty | | |

| PRODUCT | PY X-M-05 | | |
|---|---|---|---|
| **DATA** | | | |
| Rated voltage | 230 V | 115 V | 12 / 24 / 48 V DC / 24 V AC |
| | AC 50 I 60 Hz | AC 50 I 60 Hz | AC 50 I 60 Hz / DC |
| Operating range | 187–255 V | 90–135 V | AC: 18–30 V<br>DC: 10–57 V |
| Nominal current consumption @ 1 Hz | 60 mA | 110 mA | AC: 600 mA<br>DC: 280 mA @ 24 V |
| Flash rate | 0.1 / 0.5 / 0.75 / 1 Hz (DIP switch) | | |
| Flash energy | 5 J | | |
| Light intensity (DIN 5037) [1] | 56 cd | | |
| Max. viewing distance | 173 m | | |
| Operating temperature | –40 °C ... +55 °C | | |
| Storage temperature | –40 °C ... +70 °C | | |
| Relative humidity | max. 90 % | | |
| Protection system (EN 60529) | IP 66 | | |
| Protection class | II | | |
| Duty cycle | 100 % | | |
| Service life of the light source | light emission still 70 % after 8,000,000 flashes | | |
| Material – lens | polycarbonate (PC) | | |
| Material – housing | PC / ABS | | |
| Housing colour | RAL3000 (flame red) / RAL 7035 (light grey) / RAL 9003 (signal white) | | |
| Cable entry | 2x M20 sideways, 2x M20 bottom side | | |
| Integrated seal with cable entry | 6–13 mm | | |
| Connecting terminal | 2.5 mm² fine wire, AWG 16 | | |
| Weight | 400 g | 400 g | 420 g |

[1] with a clear lens

## OPTIONS/ACCESSORIES

| Surface gasket | Tamper-proof sealing | Panel mounting kit | I lim t |
|---|---|---|---|

## DIMENSIONS

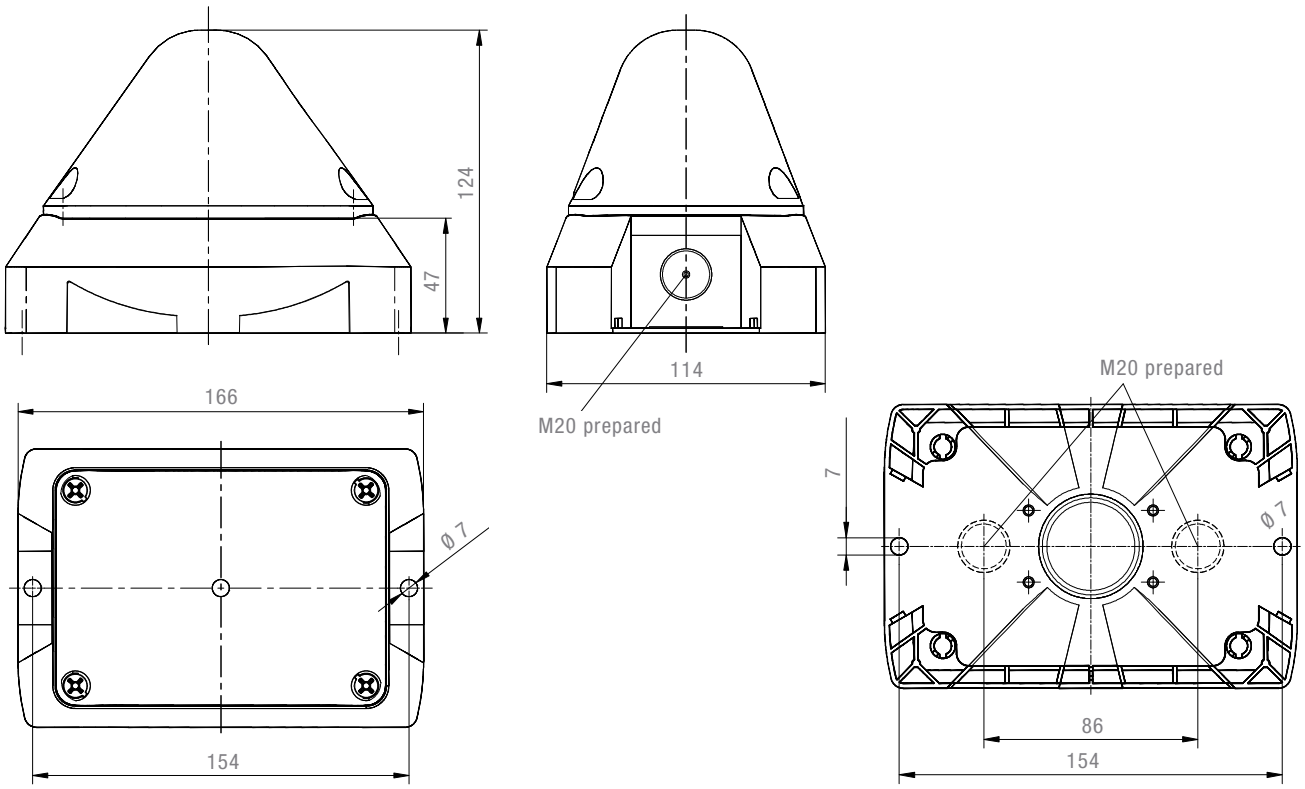


## CONNECTION DIAGRAM

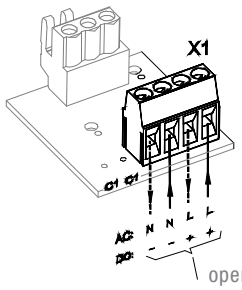


EN 54-23

| ARTICLE NO. | | PY X-M-05 | | | PY X-M-05 SSM |
|---|---|---|---|---|---|
| HOUSING COLOUR | LENS COLOUR | 230 V AC | 115 V AC | 12/24/48 V DC/ 24 V AC | 24 V DC |
| red | clear | 21550101000 | 21550151000 | 21550811000 | 21550801005 |
| red | yellow | 21550103000 | 21550153000 | 21550813000 | – |
| red | red | 21550105000 | 21550155000 | 21550815000 | 21550805005 |
| grey | clear | 21550101055 | 21550151055 | 21550811055 | 21550801061 |
| grey | yellow | 21550103055 | 21550153055 | 21550813055 | – |
| grey | red | 21550105055 | 21550155055 | 21550815055 | 21550805061 |

Article numbers for other colours and voltages on request.

## CONFORMITY TO STANDARDS

The visual characteristics of flashing lights conform to the European standard DIN EN 842; **“Machine safety – visual alarm signals”.**
Requirements contained in the DIN EN 981 standard; **“Machine safety – system of acoustic and visual alarm and information signals”,** can be fulfilled.

The colours “red” for the emergency signal and “yellow” for the warning signal conform to the requirements of IEC 73 / DIN EN 60073 / VDE 0199; **“Coding of display devices and control elements using colours and supplementary means”.**

References to visual alarm devices can be found in the following standards:

| | |
|---|---|
| EN 60825-1 | Radiation safety of laser devices, identical to IEC 825 and DIN-VDE 0837 |
| DIN EN 54 | Fire alarm systems |
| DIN 54113-2 | Radiation protection regulations for the technical operation of X-ray equipment up to 500 kV |