PYRA® MULTIFUNCTIONAL LED LIGHT
PY L-M / PY L-M RGB



RGB multi colour or single colour LED light with wide signaling area and maximum visibility.

- Selectable signaling modes – Continuous steady on, blinking light or flashing light.
- Selectable colour (RGB version only) – Choose the colour you require. Stay flexible and keep your stock to a minimum!
- External colour & mode control (RGB version only) – With PYRA® LED RGB you can state several situations with only one light. Change colour and mode easily by remote control!
- Selectable blink & flash frequencies – Adaptable to all your applications - select the frequency your gadget requires and boost the perceptibility.
- Multi-voltage-power supply – Plug and play. PYRA® LED adapts to most machines and applications no matter the voltage!
- Panel mount installation – Fully integrable into the design of your machine and equipment!
- Function-monitored (option) – The function-monitored PY L-M-M ensures more safety in sensitive applications (separate product sheet available).

RGB multi colour LED (option) · IP 66 protection system · NEMA 4/4X protection system · IK08 impact-proof housing · +55 °C / –40 °C operating temperature · brightness adjustable · 10 Years warranty · EAC EurAsian Conformity · UL UL aprproval (pending) · M12 connector (option)

3D-COVERAGE PERFORMANCE DATA	PY L-M	PY L-M RGB
Indicate	38.7 x 43.2 x 44.1 m	22.5 x 10.8 x 18.9 m
Warn	17.2 x 19.2 x 19.6 m	10.0 x 4.8 x 8.4 m
Alarm	8.6 x 9.6 x 9.8 m	5 x 2.4 x 4.2 m

To determine the exact signaling area for your needs, please use the online available Pfannenberg Sizing Software PSS.

PRODUCT		PY L-M / PY L-M RGB			
DATA					
Rated voltage		115 / 230 V AC	120 V DC	24 V AC	12–48 V DC
		50 I 60 Hz	–	50 / 60 Hz	–
Operating range		95–265 V	108–132 V	21.6–26.4 V	10–60 V
Current consumption (max)		36 mA @ 230 V AC	25 mA @ 120 V DC	167 mA @ 24 V AC	120 mA @ 24 V DC
Operating mode internally and externally selectable (RGB only)		continuous light / blinking light / flashing light			
Light alternation frequency		blinking light 1 Hz / 2 Hz I flashing light 0.1 Hz / 0.5 Hz / 0.75 Hz / 1 Hz / 2 Hz			
Light source		single colour: two high output LED / RGB: one high output LED			
Light intensity (DIN 5037) [1]		23 cd (reducible)			
Colour of RGB LED		; additionaly though external control			
Max. viewing distance		111 m			
Operating temperature		–40 °C ... +55 °C			
Storage temperature		–40 °C ... +70 °C			
Installation position		any			
Degree of protection		IP 66 (EN 60529), NEMA TYPE 4/4X, IK 08 (EN 50102)			
Service life of the light source		≥50,000 hrs			
Material	lens	- RGB) polycarbonate (PC)			
	housing	PC / ABS blend			
Cable entry		4 x M20 pre-embossed			
Connecting terminal		0.14 - 2.5 mm² fine stranded			
Weight		400 g			

[1] with a clear lens

DIMENSIONS

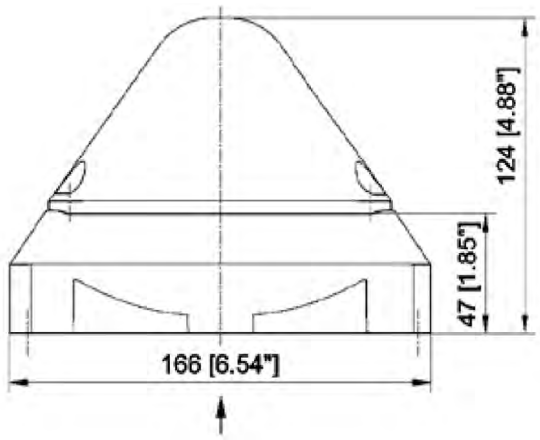

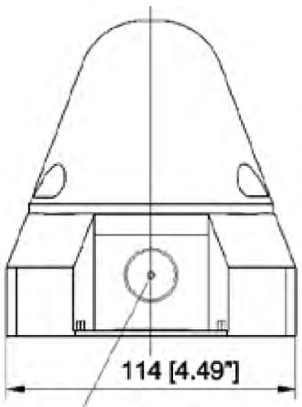

M20
cutout prepared (both sides)

M20 cutout
prepared

For screw 4.2
max. 13mm deep

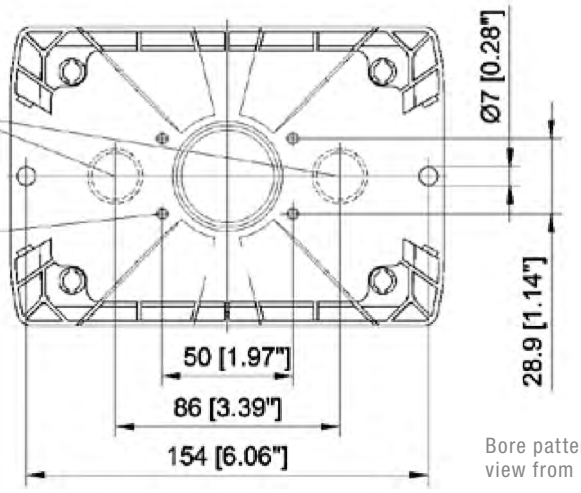

Bore pattern;
view from below

ARTICLE NO.		PY L-M / PY L-M RGB	
HOUSING COLOUR	LIGHT / LENS COLOUR	115 / 230 V AC; 120 V DC	12-48 V DC
	/	21553648055	21553818055
		21553643055	21553813055
		21553644055	21553814055
		21553645055	21553815055
		21553646055	21553816055

Article numbers for other colours and voltages on request.

OPTIONS / ACCESORIES	
Sealing plug, 4-pack	28300000002
Spare locking bolt, 4-pack	28912000000
Surface seal	28111500000
Control panel installation kit	28112000019

Version with M12 connection on request

CONFORMITY TO STANDARDS

The visual characteristics of LED lights conform to the European standard DIN EN 842; **"Machine safety – visual alarm signals".**
Requirements contained in the DIN EN 981 standard; **"Machine safety – system of acoustic and visual alarm and information signals",** can be fulfilled.

The colours "red" for the emergency signal and "yellow" for the warning signal conform to the requirements of IEC 73 / DIN EN 60073 / VDE 0199; **"Coding of display devices and control elements using colours and supplementary means".**

References to visual alarm devices can be found in the following standards:

EN 60825-1	Radiation safety of laser devices, identical to IEC 825 and DIN-VDE 0837
DIN EN 54	Fire alarm systems
DIN 54113-2	Radiation protection regulations for the technical operation of X-ray equipment up to 500 kV