PYRA FLASHING LIGHT 10 J
PY X-M-10



- Safe – an incorrect installation is virtually impossible.
- Easy – significantly shorter assembly and installation times.
- Economical – largest possible signaling range due to effective Xenon technology.
- Installation options with external lugs or internal holes.
- Choice of 4 different flash rates via DIP switch.
- Suitable for panel mounting.
- Electronic constant current regulation at 24 V DC devices to avoid load fluctuations.
- Integrated inrush current limitation and undervoltage detection (option).
- Providing full synchronisation on multi-flashing light systems.

IP 66	IK08	+55 °C / –40 °C	EN 54-23	VdS	10 Years	EAC	UL
protection system	impact-proof housing	operating temperature	SSM version	SSM version	warranty		

PRODUCT		PY X-M-10		
DATA				
Rated voltage		230 V AC 50 I 60 Hz	115 V AC 50 I 60 Hz	12 / 24 / 48 V DC
Operating range		187–255 V	90–135 V	10–57 V
Nominal current consumption @ 1 Hz		150 mA	240 mA	540 mA @ 24 V
Flash rate		0.1 / 0.5 / 0.75 / 1 Hz (DIP switch)		
Flash energy		10 J		
Light intensity (DIN 5037) [1]		149 cd		
Max. viewing distance		283 m		
Operating temperature		–40 °C ... +55 °C		
Storage temperature		–40 °C ... +70 °C		
Relative humidity		max. 90 %		
Protection system (EN 60529)		IP 66		
Protection class		II		
Duty cycle		100 %		
Service life of the light source		light emission still 70 % after 8,000,000 flashes		
Material	lens	polycarbonate (PC)		
	housing	PC / ABS		
Housing colour		RAL 3000 (flame red) / RAL 7035 (light grey) / RAL 9003 (signal white)		
Cable entry		2x M20 sideways, 2x M20 bottom side		
Integrated seal with cable entry		6–13 mm		
Connecting terminal		2.5 mm² fine wire, AWG 16		
Weight		440 g		

[1] with a clear lens

OPTIONS/ACCESSORIES

Surface gasket	Tamper-proof sealing	Panel mounting kit	I lim t

DIMENSIONS

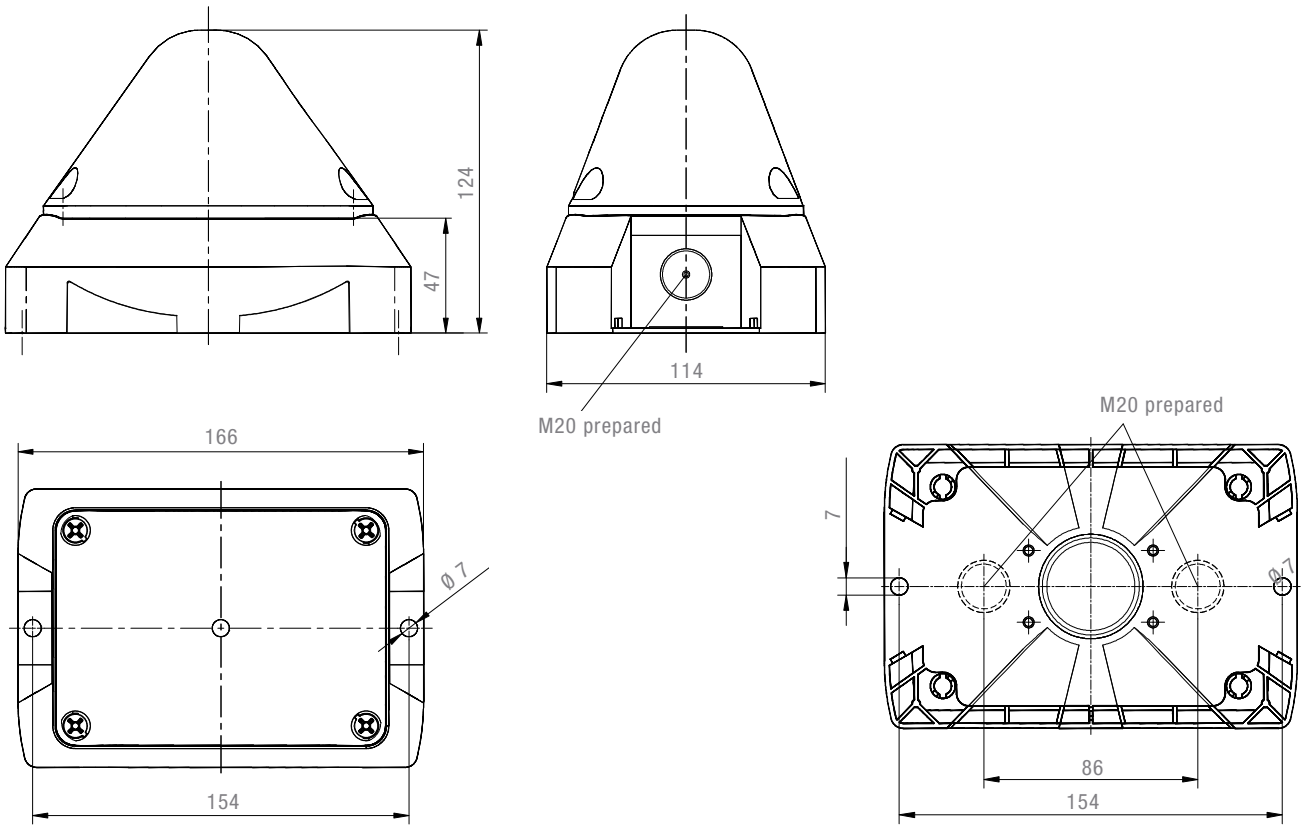

EN 54-23

ARTICLE NO.		PY X-M-10			PY X-M-10 SSM
HOUSING COLOUR	LENS COLOUR	230 V AC	115 V AC	12/24/48 V DC	24 V DC
red	clear	21551101000	21551151000	21551811000	21551811005
red	yellow	21551103000	21551153000	21551813000	–
red	red	21551105000	21551155000	21551815000	21551815005
grey	clear	21551101055	21551151055	21551811055	21551811061
grey	yellow	21551103055	21551153055	21551813055	–
grey	red	21551105055	21551155055	21551815055	21551815061

Article numbers for other colours and voltages on request.

CONFORMITY TO STANDARDS

The visual characteristics of flashing lights conform to the European standard DIN EN 842; **“Machine safety – visual alarm signals”.**
Requirements contained in the DIN EN 981 standard; **“Machine safety – system of acoustic and visual alarm and information signals”,** can be fulfilled.

The colours “red” for the emergency signal and “yellow” for the warning signal conform to the requirements of IEC 73 / DIN EN 60073 / VDE 0199; **“Coding of display devices and control elements using colours and supplementary means”.**

References to visual alarm devices can be found in the following standards:

EN 60825-1	Radiation safety of laser devices, identical to IEC 825 and DIN-VDE 0837
DIN EN 54	Fire alarm systems
DIN 54113-2	Radiation protection regulations for the technical operation of X-ray equipment up to 500 kV