SOUNDERS 105/110 dB(A)
DS 5-SIL / DS 10-SIL



Integrated safety tough demands under industrial conditions.

- To signal dangerous situations in safety-relevant application such as process and plant safety, e. g.
  - leaks/gas warning, high-pressure/overfilling

  and machine safety, e. g. as
  - start-up warning, excess rotation speed warning, machine stop delay warning
- By means of integrated self-monitoring of the devices the normative required, regular inspection of warning devices is ensured.
- The warning devices can be implemented in Safety Instrumented Systems (SIS) up to **SIL 2/PLd.**

We would be more than happy to provide all safety-technical key data.

IP 66 / IP 67 — protection system

+55 °C / –25 °C — operating temperature

acoustic penetration

10 Years — warranty

EAC

PRODUCT	DS 5-SIL		DS 10-SIL	
DATA				
Operating range	95–253 V	19–29 V	95–253 V V	19–29 V
	AC 50 I 60 Hz	DC	AC 50 I 60 Hz	DC
Nominal current consumption	40 mA @ 230 V	280 mA	60 mA @ 230 V	420 mA
Diagnostics channel — current consumption	30 mA @ 230 V	20 mA	30 mA @ 230 V	20 mA
Diagnostics channel — switching power	230 V / 80 mA			
Sound pressure level	105 dB(A)		110 dB(A)	
Alarm tones	32 / 4 tones are externally selectable			
Operating temperature	–25 °C ... +55 °C			
Storage temperature	–40 °C ... +70 °C			
Relative humidity	90 %			
Protection system according to EN 6052	IP 66 I IP 67			
Duty cycle	100 %			
Material	die-cast aluminium GD-Al Si12 Cu			
Surface coating	epoxy resin paint RAL 3000, flame red			
Cable bushing	2x M20 (1x chrome-plated brass cable fitting, 1x chrome-plated brass blanking plug)			
Clamping range of the cable fitting	8–12 mm			
Connecting terminals	max. 2.5 mm²			
Weight	2.15 kg	1.95 kg	2.15 kg	1.95 kg

OPTIONS/ACCESSORIES

TAS: External tone selection for controlling several tones over great distances.

DIMENSIONS

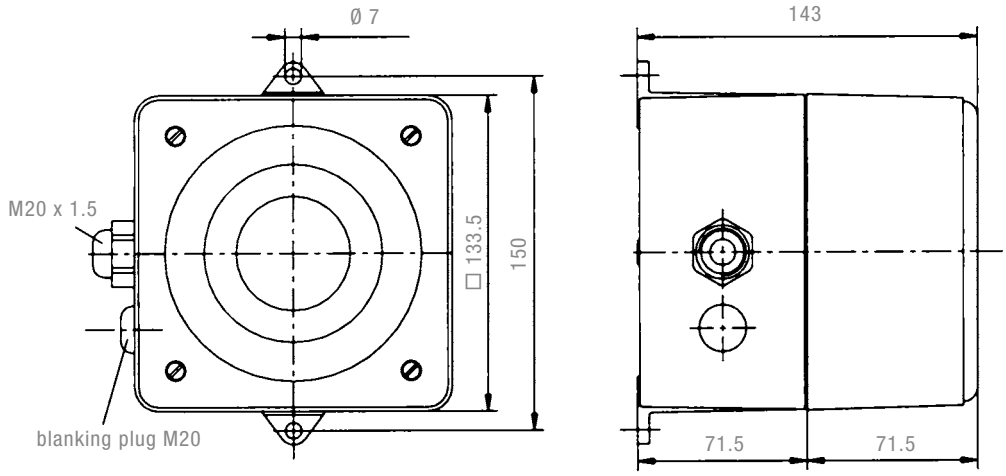

CONNECTION DIAGRAM

X1
Sounder channel

1	PE
2	PE
3	L/+ Operating voltage
4	L/+ Operating voltage
5	N/– Operating voltage
6	N/– Operating voltage

X2
optional external tone selection (option -TAS or -TAV)

1	L/+ Stage S2
2	L/+ Stage S2
3	L/+ Stage S3
4	L/+ Stage S3

X1
Monitoring channel

1	L/+ Operating voltage
2	L/+ Operating voltage
3	N/– Operating voltage
4	N/– Operating voltage
5	Alarm relay (MOS relay 230 V~,
6	Alarm relay 80 mA, 35 Ω, conductive,
7	Alarm relay if function channel
8	Alarm relay is acoustically active)

ARTICLE NO.		DS 5-SIL		DS 10-SIL	
VERSION	RATED VOLTAGE	95–253 V AC	24 V DC	95–253 V AC	24 V DC
Standard		23106100601	23106800601	23111100601	23111800601
TAS		23106100603	23106800603	23111100603	23111800603

Article numbers for other voltages and versions on request.

CONFORMITY TO STANDARDS

The sounders fulfil the requirements to the functional safety according to:
EN 61508 Functional safety of electrical/electronic/programmable electronic safety-related systems
EN 61511 Functional safety – Safety instrumented systems for the process industry sector

The devices can be used in safety related control systems in accordance with the following standards:
EN ISO 13849-1 Safety of machinery – Safety related parts of control systems – part 1
EN 62061 Safety of machinery – Functional safety of electrical/electronic/programmable electronic safety-related systems

The devices conform to the following standards:
EN 61310-1 Safety of machinery – Indication, marking and actuation – part 1: Requirements for visual, acoustic and tactile signals
EN ISO 7731 Ergonomic - alarms for public areas and workplaces – acoustic alarms
EN 981 Safety of machinery – System of acoustic and visual alarm signals and information signals
DIN 33404-1 Alarms for workplaces; acoustic alarms; unified emergency signal
ISO 8201 Acoustics; Audible emergency evacuation signal