SOUNDER 110 dB(A)
BExS 110 d/e | BExDS 110 d/e



- 32 different tones can be set; UKOOA/PFEER conform.
- 110/117 dB(A) ±3 dB(A) sound pressure.
- 3 externally selectable tones – positive and negative control possible in the case of DC devices.
- Quartz-stabilised tone synchronisation.
- Adjustable volume (except 12 V DC).
- ATEX and optionally IECEx approval.
- Housing made of die-cast aluminium LM6, horn made of ABS.
- Stainless steel mounting bracket for 360° positioning.
- Categories 2G and 3G (Zones 1 and 2).
- Also available as categories 2D & 3D (Zones 21 & 22) for dust zones.
- Amendment 2; extended approval/temperature range +70 °C.

IP 66 / IP 67 — protection system

+70 °C / –50 °C — operating temperature

EN 54-3 — Exd 24 V DC

VdS G209081 — Exd 24 V DC

EAC

PRODUCT	BExS 110 d/e | BExDS 110 d/e				
Rated voltage	230 V	115 V	48 V	24 V	12 V
	AC 50 | 60 Hz		DC		
Operating range	±10 %		±25 %		
Nominal current consumption	56 mA	110 mA	130 mA	250 mA	195 mA

PRODUCT		BExS 110 d/e	BExDS 110 d/e
Protection system		"d" = IP 67; or "e" = IP 66	
Explosion protection		II 2G Ex d IIC T4 / II 2G Ex de IIC T4 II 2G Ex d IIB T4 / II 2G Ex de IIB T4	II 2G/D Ex d IIC T4 100°C / II 2G/D Ex de IIC T4 100°C II 2G/D Ex d IIB T4 115°C / II 2G/D Ex de IIB T4 115°C
Category (area of use)		2G (Zone 1) 3G (Zone 2)	2G (Zone 1) / 2D (Zone 21) 3G (Zone 2) / 3D (Zone 22)
Certificate of conformity		KEMA 99 ATEX 7906	KEMA 99 ATEX 6312
Testing body		KEMA	KEMA
Sound pressure level		110 dB(A) ±3 dB(A)	110 dB(A) ±3 dB(A)
Alarm tones		32	
Temperature class T		IIC: T4 @ –50 °C ... +55 °C Ta IIB: T4 @ –50 °C ... +70 °C Ta	T4 @ –50 °C ... +55 °C Ta
Storage temperature		–50 °C ... +70 °C	
Relative humidity		90 %	
Duty cycle		100 %	
Material	housing	die-cast aluminium LM6, similar to RAL 3000 (flame red)	
	horn	ABS self-extinguishing, similar to UL 94 V0 & 5VA FR ABS, Ex II 2D anti-static ABS, black	
Connecting terminals	Exd	1x 4 mm² or 2x 2.5 mm²	
	Exde	2x 2.5 mm²	
Cable entry		2 / 1x closed, 1x open (M20), optionally PG13.5 or 1/2" NPT	
Weight	Exd	AC: 3.42 kg | DC: 3.16 kg	
	Exde	AC: 3.68 kg | DC: 3.42 kg	

OPTIONS/ACCESSORIES

IECEx No. SIM 04.0001 — Exd BExDS

TONE TABLE

NO.	DESCRIPTION – BASIC TONE	STAGE 2	STAGE 3
1	Continuous tone	31	11
2 [1]	Alternating tone, UK BS5839-1 (fire alarm, railway crossing)	17	5
3	Slow whoop	2	5
4	Sweeping (fast)	6	5
5	Continuous tone	3	27
6	Sweeping	7	5
7	Sweeping (fast)	10	5
8	Sweeping	2	5
9	Sawtooth, DIN tone 33404-3 Germany (emergency signal), PFEER PTAP	15	2
10	Alternating tone	7	5
11	Interrupted tone	31	1
12	Alternating tone	4	5
13	Interrupted tone	15	5
14	Interrupted tone	4	5
15	Continuous tone	2	5
16	Interrupted tone	18	5
17	Alternating tone, France NFS 32-001 (fire alarm)	2	27
18	Interrupted tone, Sweden SS031711 (air raid warning)	2	5
19	Sweeping, France NFC48-265	2	5
20	Continuous tone, Sweden SS031711 (all-clear signal)	2	5
21	Alternating tone, Sweden SS031711	2	5
22	Interrupted tone	2	5
23	Interrupted tone	6	5
24	Sweeping (medium), UK BS5839-1	29	5
25	Sweeping	29	5
26	Interrupted tone, (fast variable), bell	2	1
27	Continuous tone	26	5
28	Continuous tone	2	5
29	Sweeping (fast), UK BS5839-1	7	5
30	Interrupted tone, Australia AS2220, AS1610, AS1670	32	5
31	Sawtooth, DIN tone 33404-3 Germany (emergency signal)	11	1
32	Slow whoop, Australian evacuation alarm AS2220	26	1

[1] factory setting

The sounder can be set externally to the respective tones of stage 2 & 3. Tone 2 is preset.

ARTICLE NO.	BExS 110D		BExS 110E		BExDS 110D	BExDS 110E
Rated voltage	230 V AC	24 V DC	230 V AC	24 V DC	230 V AC	230 V AC
	32080100000	32080800000	32082100000	32082800000	32075100000	32085100000

Article numbers for other voltages on request.

DIMENSIONS

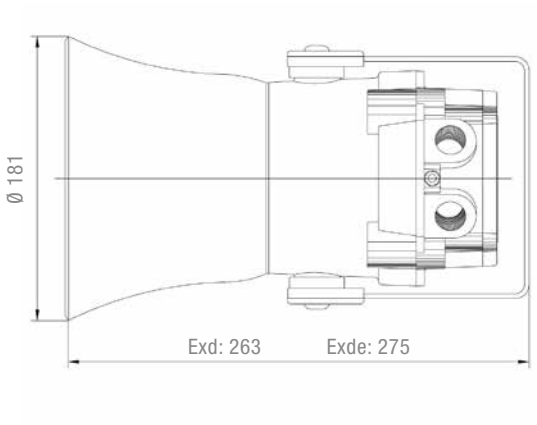

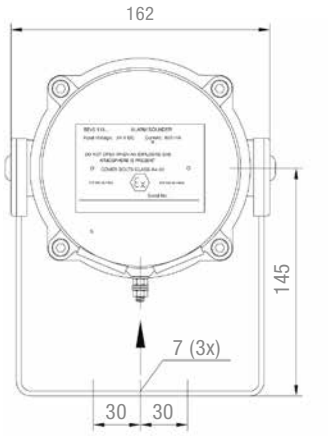

CONNECTION DIAGRAMS

AC

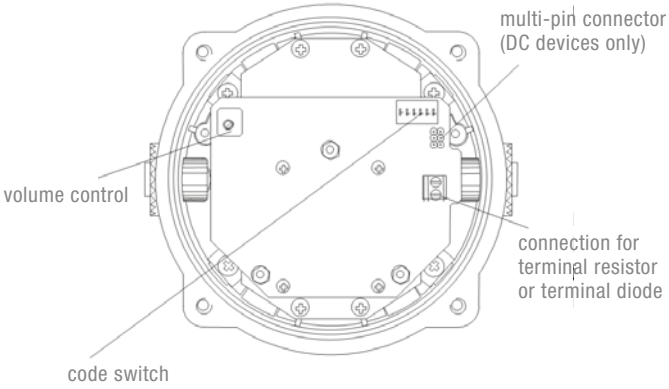

DC

