LOAD RATINGS	
RATING	Lbs
RADIAL BASIC DYNAMIC	2,700
DYNAMIC THRUST LOAD	1,880
MAXIMUM STATIC CAPACITY	1,100

NOTES:
1. BALL BEARINGS COME PRE-PACKED WITH GREASE

NSN NO.

DRAWING NO. **PHRE-150-A**

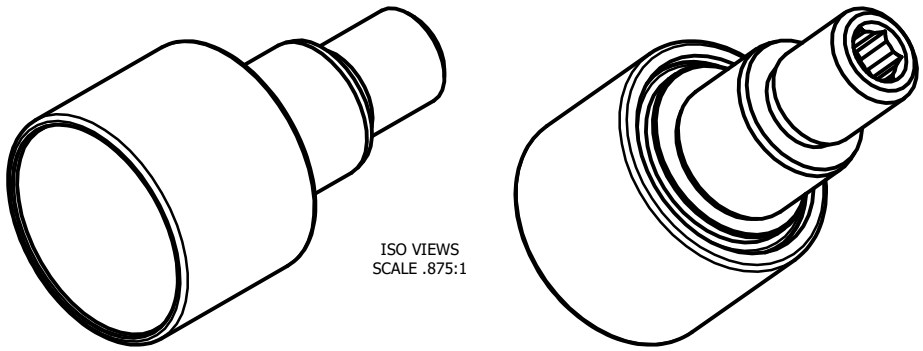

ISO VIEWS
SCALE .875:1

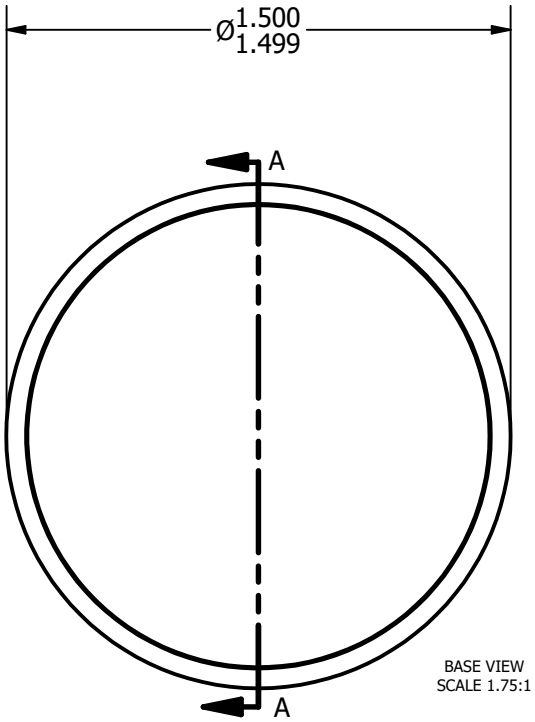

BASE VIEW
SCALE 1.75:1

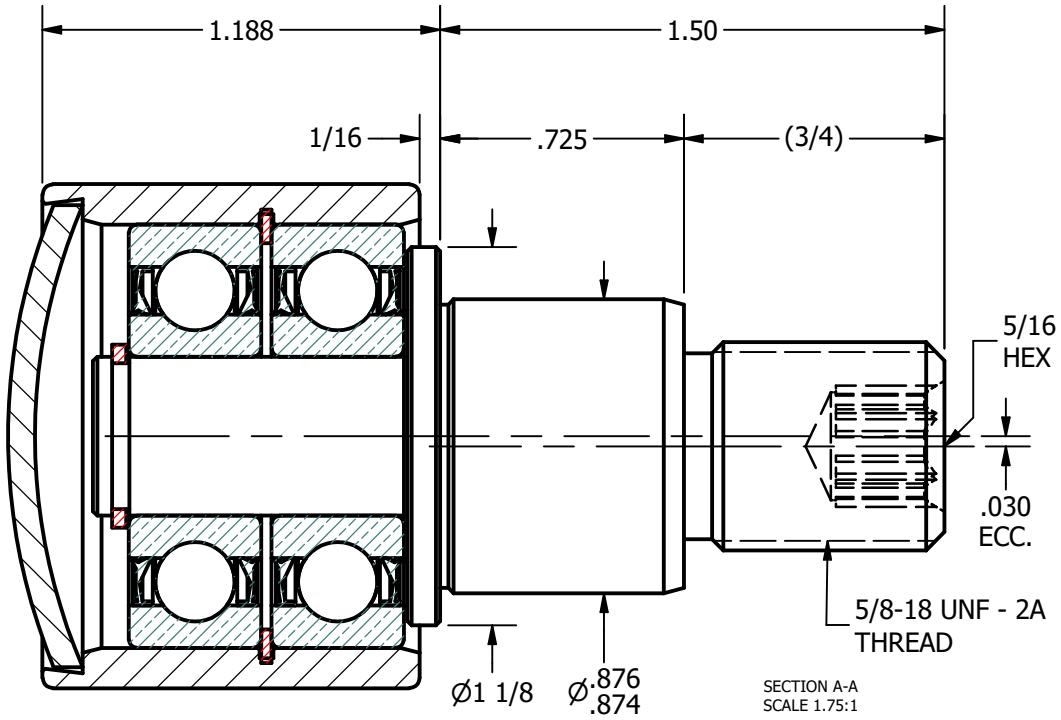

SECTION A-A
SCALE 1.75:1

MATERIAL NOTES:

OUTER - BEARING STEEL, HEAT TREATED
STUD - COLD ROLLED STEEL
BALL BEARING - 6201-2RS, QTY [2]
RETAINING RINGS, SPRING STEEL
END CAP, COLD ROLLED STEEL

CUSTOMER PART#

OSBORN# PLRE-1 1/2,
McGill# PCFE 1 1/2
[2145100000]

.XX = ± .01
.XXX = ± .005
.XXXX = ± .0005
ANGLES = ± 1˚
INCH [METRIC]

CHANGE NOTE:

CARTER MANUFACTURING IS NOT RESPONSIBLE FOR TYPOGRAPHICAL ERRORS

REVISION

A	AUTHOR. BY	DRAWN BY	CHK'D BY	SALES	MATERIAL
	KPR	SGW	KR	KPR	NOTED
REV. BY	DATE	DATE	DATE	DATE	DRAWING NO.
SGW	2/7/2007	2/7/2007	2/7/2007	6/25/1997	**PHRE-150-A**

CARTER MANUFACTURING CO., INC.
GRAND HAVEN, MICHIGAN 49417

PART NAME: **ASSEMBLY** SHEET 1 OF 2