LOAD RATINGS	
RATING	Lbs
RADIAL BASIC DYNAMIC	4,840
MAXIMUM STATIC CAPACITY	11,280

NOTES:
1. BEARING IS PACKED WITH LITHIUM BASED #2 WEIGHT GREASE
2. ALL EXPOSED SURFACES HAVE BLACK OXIDE

MS NO.	WSN NO.	DRAWING NO.
		YNB-52

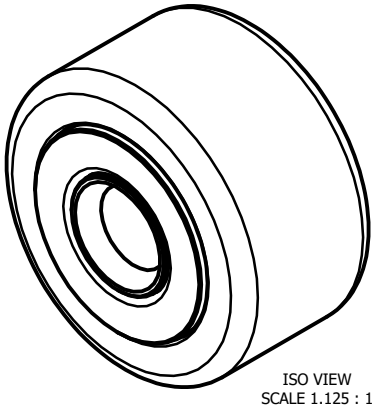

ISO VIEW
SCALE 1.125 : 1

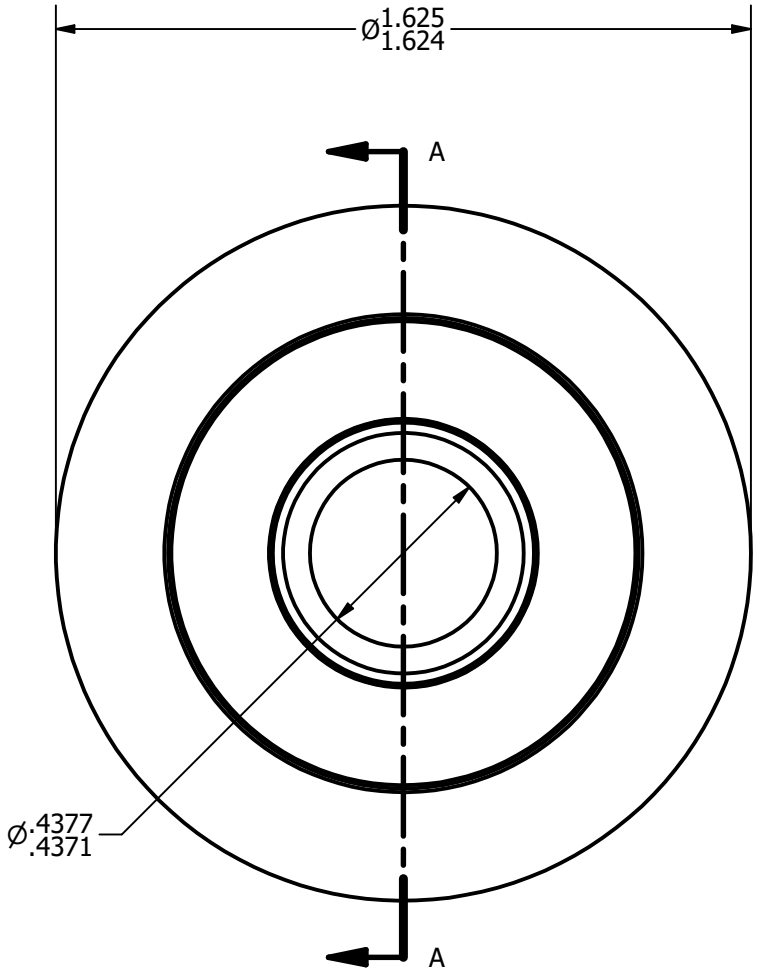

BASE VIEW
SCALE 2.25 : 1

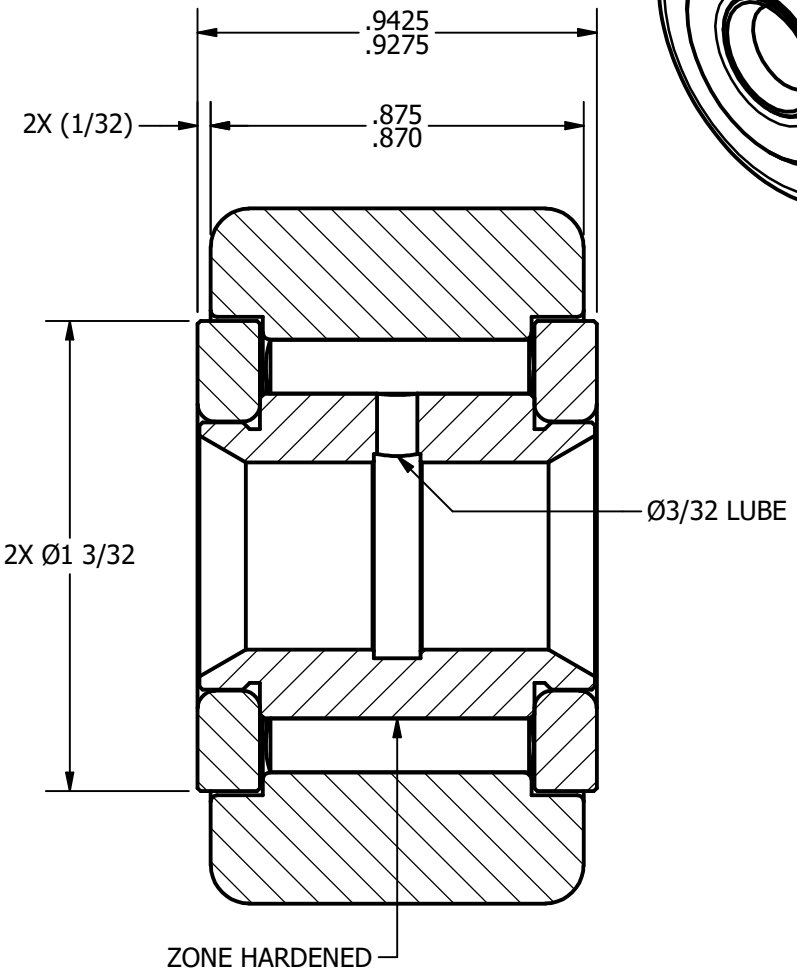

SECTION A-A
SCALE 2.25 : 1

MATERIAL NOTES:

OUTER RACE - BEARING STEEL, HEAT TREATED
INNER RACE - BEARING STEEL, ZONE HARDENED
NEEDLE ROLLERS - BEARING STEEL, HEAT TREATED
WASHERS - COLD ROLLED STEEL, HEAT TREATED

CUSTOMER PART#

.XX = ± .01
.XXX = ± .005
.XXXX = ± .0005
ANGLES = ± 1°
INCH [METRIC]
FRACTION = ± 1/32

CHANGE NOTE:

CARTER MANUFACTURING IS NOT RESPONSIBLE FOR TYPOGRAPHICAL ERRORS

CARTER MANUFACTURING CO., INC.
GRAND HAVEN, MICHIGAN 49417

REVISION: C | PART NAME: **ASSEMBLY** | SHEET 1 OF 2

REV. BY	AUTHOR. BY	DRAWN BY	CHK'D BY	SALES	MATERIAL
	DB	EMD	SGW	KPR	NOTED
REV. BY	DATE	DATE	DATE	DATE	DRAWING NO.
MD	4/4/2013	8/4/2006	4/4/2013	8/3/2006	YNB-52