34LY7074

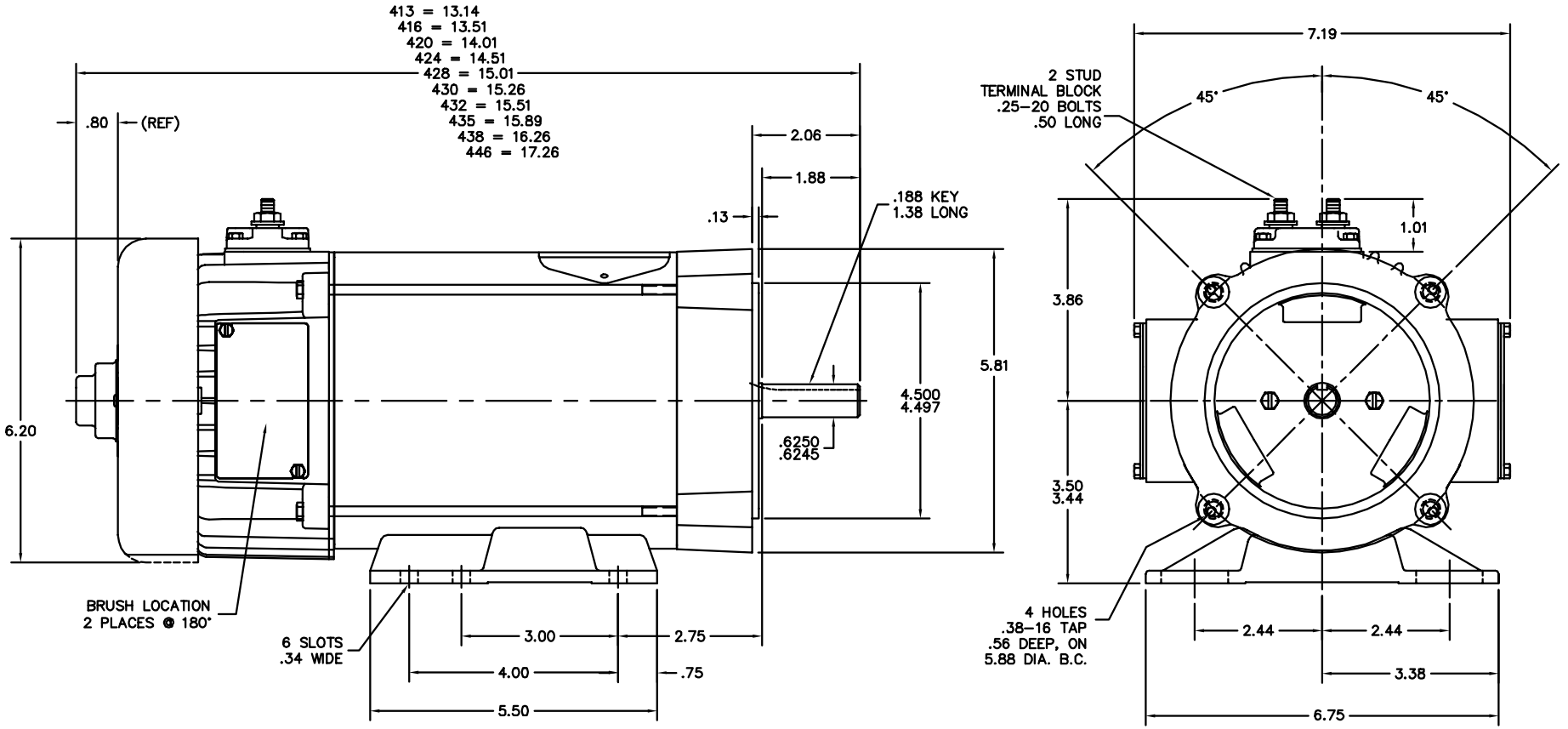

34LY7074

CUSTOMER IS RESPONSIBLE FOR DETERMINING THAT BALDOR'S PRODUCT WILL PERFORM SUITABLY IN THE INTENDED APPLICATION.

REV. DESC: ADD 432 STACK AND REVISED 430, 438 & 446 LENGTHS		
REV. LTR: C	VERSION: 03	TDR: 000000735480
FILE: \AAA\00116\881	REVISED: 08:08:11 02/29/2012	BY: ENJERWO
MTL: –		

BALDOR

STD HORZ 34PM NEMA 56C TEFC W/TERMINAL BLOCK (HI DEMAG MTR)

SH 1 of 1

34LY7074