34LY6483

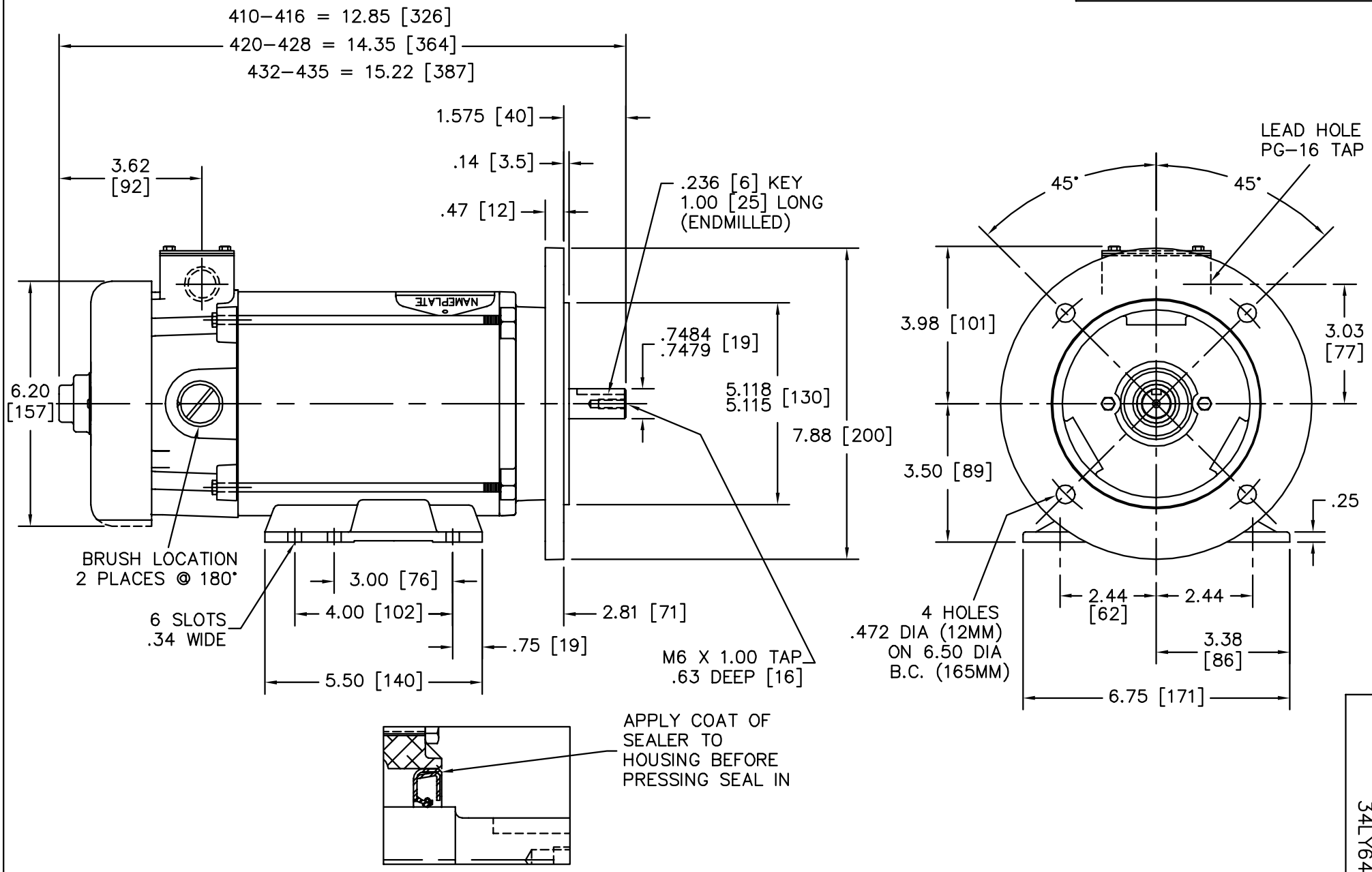

CUSTOMER IS RESPONSIBLE FOR DETERMINING THAT BALDOR'S PRODUCT WILL PERFORM SUITABLY IN THE INTENDED APPLICATION.

REV. DESC: UPDATE TITLE BLOCK		
REV. LTR: A	VERSION: 01	TDR: 000000996684
FILE: \AAA\00067\427	REVISED: 02:15:39 09/13/2016	BY: ENFRAJ0
MTL: –		

BALDOR

HOR 34PM TEFC IEC D80D, B5/B35 NEMA BASE & MTG/MFTK

SH 1 of 1

34LY6483