35LYS576

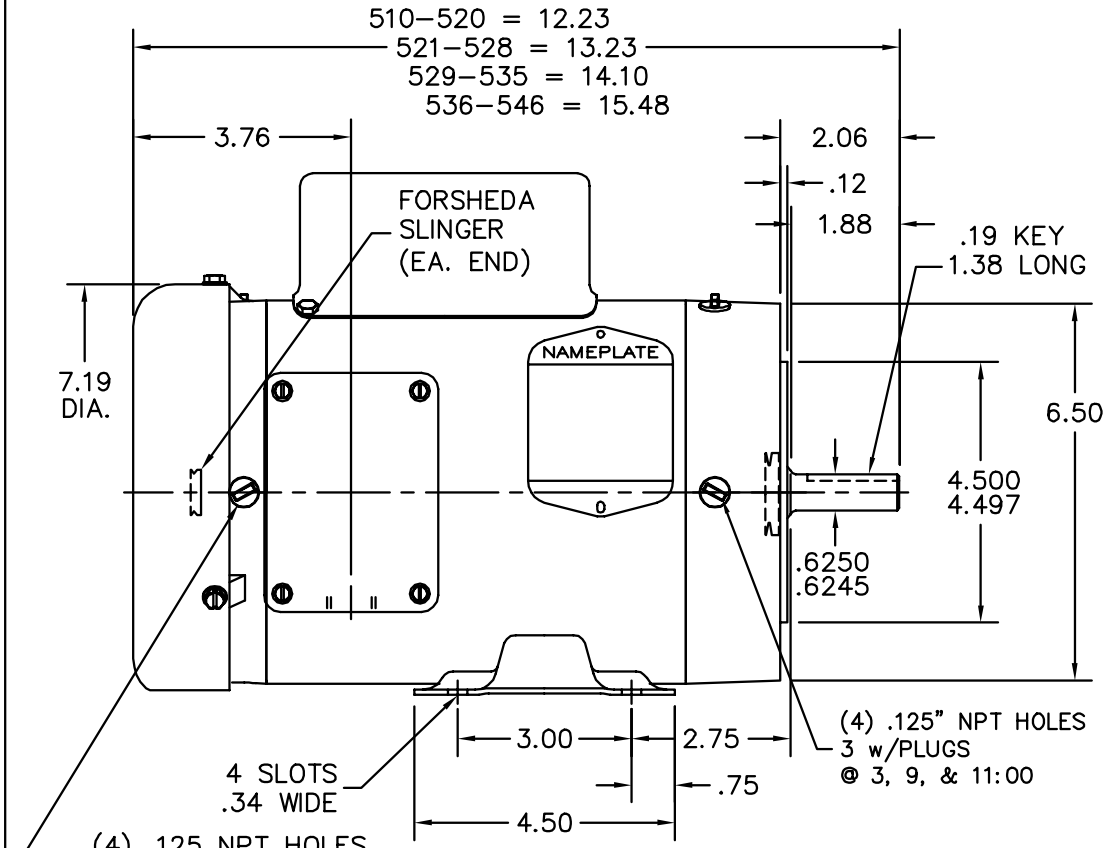

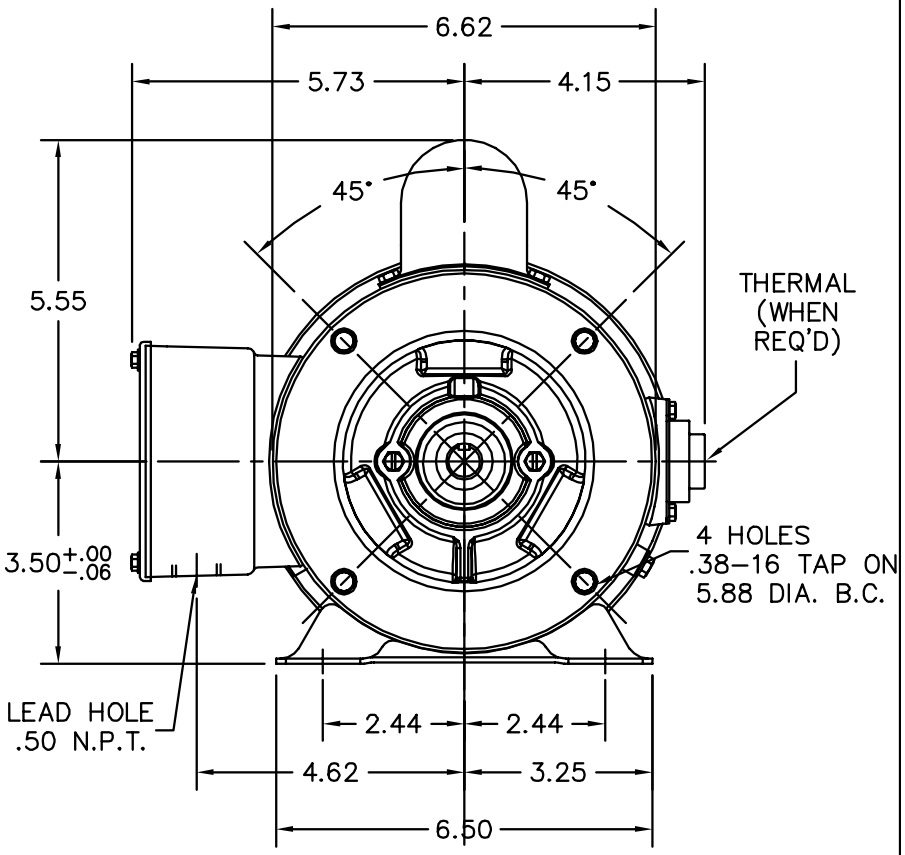

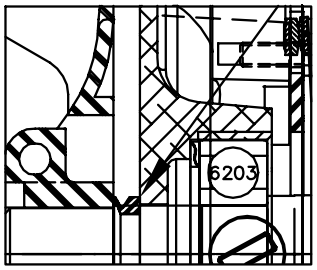

FRONT END DETAIL

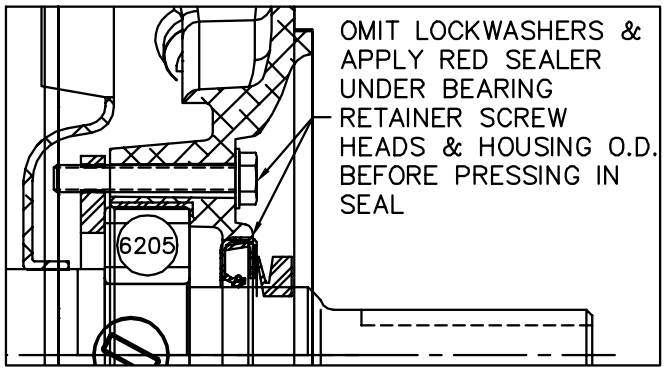

PULLEY END DETAIL

CUSTOMER IS RESPONSIBLE FOR DETERMINING THAT BALDOR'S PRODUCT WILL PERFORM SUITABLY IN THE INTENDED APPLICATION.

REV. DESC: UPDATE ENDPLATES AND NOTES		
REV. LTR: D	VERSION: 04	TDR: 000001076108
FILE: \AAA\00092\880	REVISED: 02:54:51 06/25/2018	BY: FGCHAH1
MTL: –		

BALDOR - RELIANCE®

STD HORZ 56C TEFC 35L WD (S/P #9)

SH 1 of 1

35LYS576