34LY7080

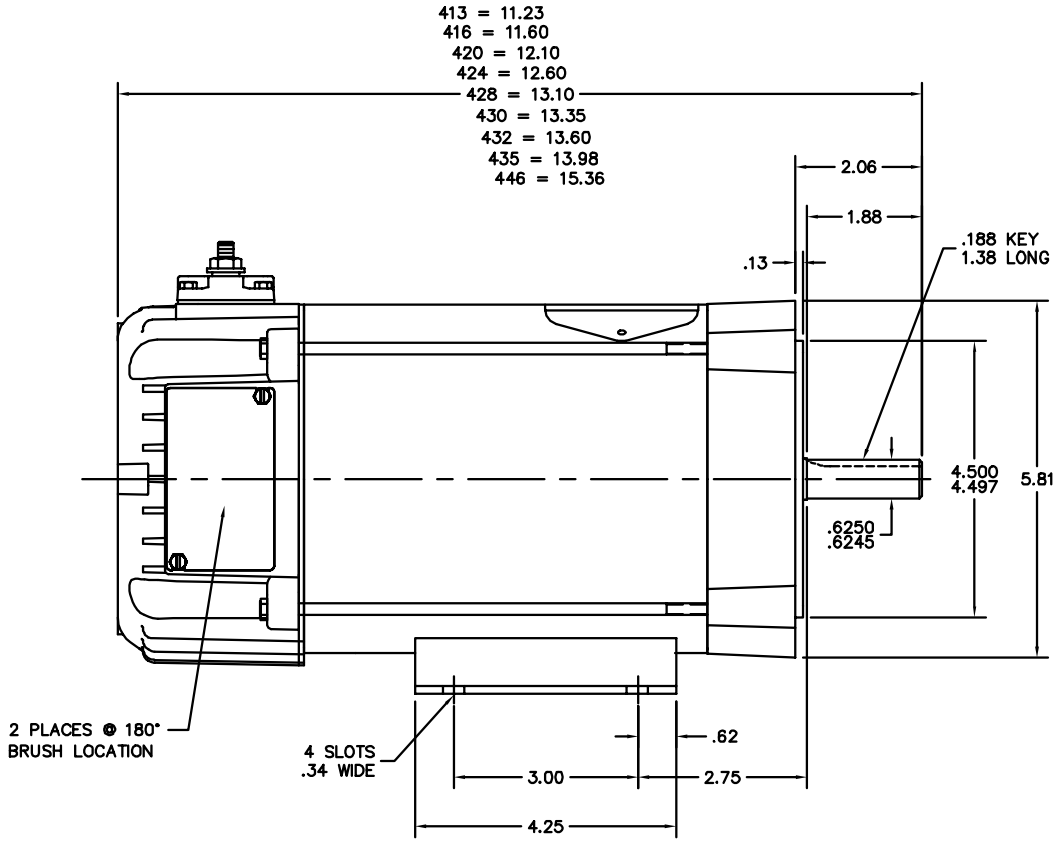

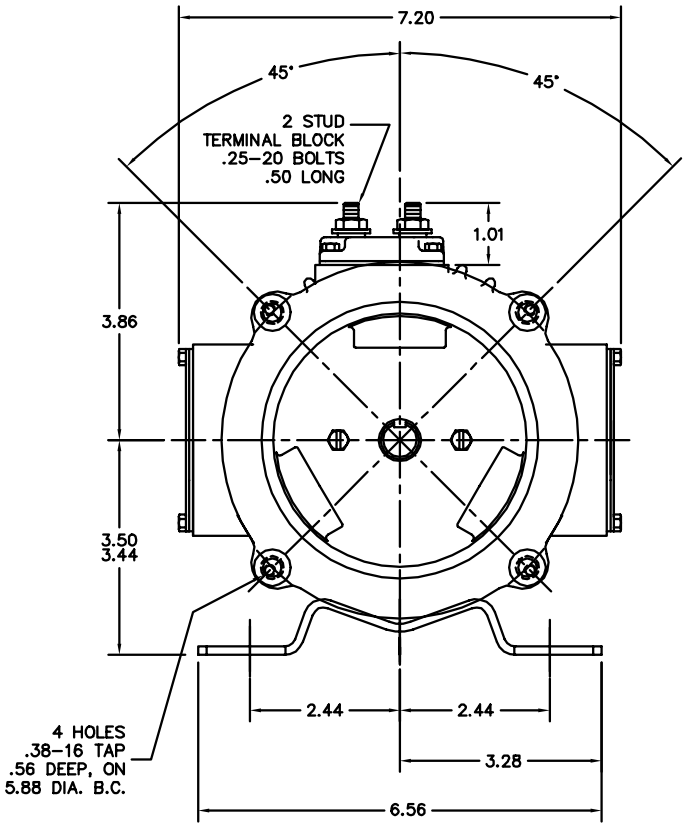

34LY7080

CUSTOMER IS RESPONSIBLE FOR DETERMINING THAT BALDOR'S PRODUCT WILL PERFORM SUITABLY IN THE INTENDED APPLICATION.

REV. DESC: CORRECT OAL DIMENSION. IT IS NOT TOUCHING FREP		
REV. LTR: C	VERSION: 03	TDR: 000000939125
FILE: \AAA\00118\141	REVISED: 10:52:52 08/13/2015	BY: USGRHUR
MTL: –		

BALDOR

STD HORZ 34PM NEMA 56C TENV W/TERMINAL BLOCK (HI DEMAG MTR)

SH 1 of 1