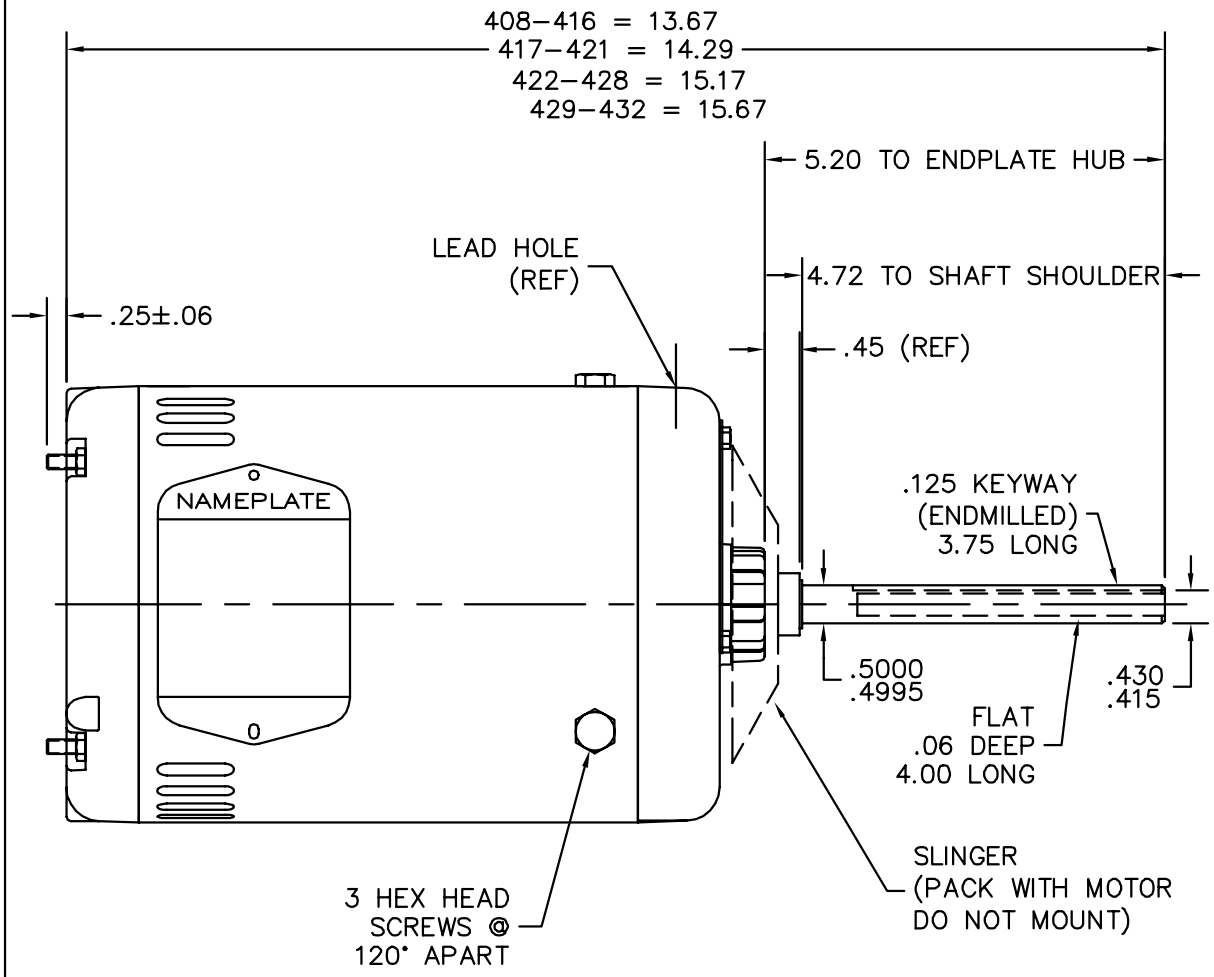

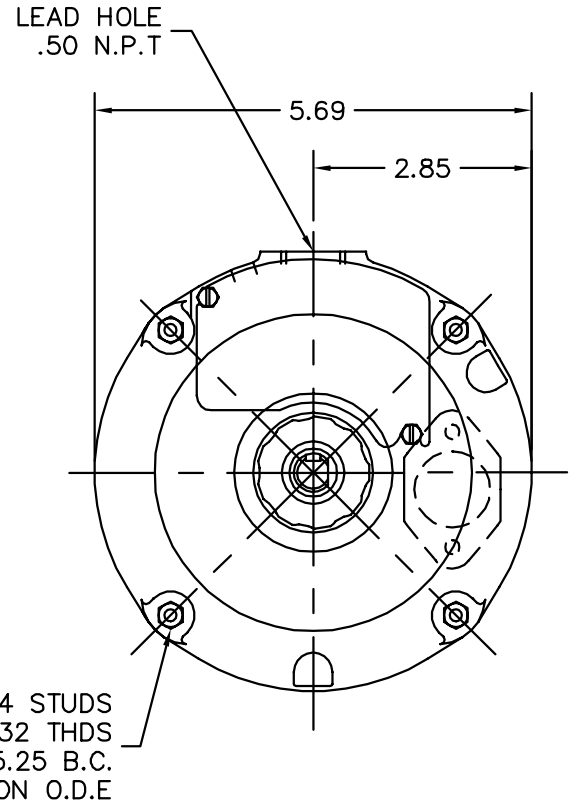

34LYJ288

CUSTOMER IS RESPONSIBLE FOR DETERMINING THAT BALDOR'S PRODUCT WILL PERFORM SUITABLY IN THE INTENDED APPLICATION.

REV. DESC: REVISE THRUBOLT TOLERANCE WAS +0/–.06			BALDOR • DODGE • RELIANCE
REV. LTR: G	VERSION: 03	TDR: 000000477519	
FILE: \AAA\00090\059		REVISED: 10:25:57 09/22/2008	VER 34M NEMA 48YZ OPEN W/ATO IN EP
MTL: –		BY: ENMARW1	SH 1 of 1