ZERO-MAX

Roh'Lix® Actuators

Roh'lix® Linear Actuators
Operation and Installation Instructions



These instructions are for standard Roh'lix Linear Actuators with normal running conditions. Special Roh'lix units may have different instructions or drawings.

- The Roh'lix Linear Actuator is a threadless, mechanical screw-type linear actuator that converts rotary motion into precise linear motion and thrust with the unique ability to slip if overloaded.

Driveshaft Specification

- Driveshafts must have adequate diameter to avoid shaft deflection caused by the weight of an assembly over a long span between bearing supports. Excessive shaft deflection can cause vibration and premature failure of the system. Hollow shafting can be used to reduce shaft deflection because it reduces shaft weight. Refer to catalog or contact factory to discuss proper shaft diameters and mounting for your application.
- Recommended driveshaft material is C-1060 hardened and ground steel shafting with a minimum hardness of Rockwell 58C. Its hardness can provide optimum life expectancy and its ground surface provides uniform friction conditions for repeatable Roh'lix Actuator overload settings. This shafting is available from local industrial supply distributors.

Figure 1

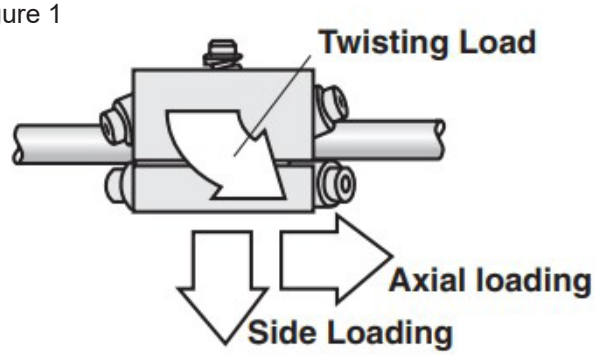

Installation

- The Roh'lix should only be axially loaded because this method allows for an even load distribution over all of the six bearings. Side loads and twisting loads (Figure 1) should be avoided because they cause uneven bearing loads and will shorten life expectancy. Whenever possible, the load weight on the Roh'lix should be supported by a separate carriage.

  Note: Side loads should be subtracted from the thrust capacity of the unit and never exceed 50% of the unit's thrust capacity. If this is not possible, select the next larger size Roh'lix.
- To install on the shaft, remove the two cap screws, springs, and washers, then separate the two block halves.
- Position the block halves on the drive shaft using the guide pins for proper end-to-end placement.
- Re-install the cap screws, springs, and washers, then tighten screws with an equal number of turns.
- Test the unit to be sure the thrust setting is adequate to carry the load. A simple spring scale may be used.

  Note: Table 1 may be used as a guide for establishing the proper thrust setting. **Do not exceed the thrust rating of the unit.**

Table 1

Model No	Screw Length	Screw Size	Approximate Thrust Per Turn (Lbs.)
1	1.25	6-32	3
2	1.50	10-32	17
3	2.00	1/4-20	25
4	2.25	1/4-20	25
5	2.50	3/8-16	35

Caution: Rotating equipment is potentially dangerous and should be properly guarded. It is the responsibility of the machine builder, user, or operator to follow all applicable safety codes and provide a suitable guard. Make sure the machine is "locked out" and cannot be accidentally started during installation or maintenance of Roh'lix.

13200 Sixth Avenue North, Plymouth, MN 55441-5509
Phone 763.546.4300 ■ Fax 763.546.8260 ■ TOLL FREE 1.800.533.1731 ■ www.zero-max.com

Roh'lix Linear Actuators

General Information

Overload Protection

- Roh'lix Linear Actuators feature adjustable automatic overload protection that will slip when overloaded to provide linear clutching without any additional clutch mechanisms. When a preset thrust or overload point is reached or exceeded, the bearings slip and stop advancing the Roh'lix even though driveshaft rotation continues. Pushing or pulling on the Roh'lix in excess of its thrust setting causes it to slide along the driveshaft whether or not the shaft is turning. Roh'lix Actuators are designed to provide intermittent overload protection and should be applied for continuous slip use.
- **Repeatability**
  Roh'lix Linear Actuators are friction driven devices and are sensitive to load changes. Therefore, they often do not return to *exact* predetermined locations. Applications requiring precise positioning accuracy should be designed using closed-loop feedback, and/or limit switches.
- **Temperature**
  Roh'lix Linear Actuator bearings operate in an ambient temperature range of -10°F to +180°F.
- **Maintenance**
  Periodically wipe the shafting to keep it dry and free of dirt and debris. The bearings are permanently lubricated.
- **Efficiency**
  Roh'lix Actuator bearings provide efficient rolling contact between the outer race and the driveshaft resulting in a mechanical efficiency of at least 90 percent.
- **Backlash**
  Roh'lix Actuator springs preload the bearings against the driveshaft thus reducing backlash to less than 0.001 inch.

Roh'lix Life Expectancy

- Tests at the factory and many years of application experience suggest the minimum life expectancy in a typical application is 2,000,000 inches of linear travel to as high as 100,000,000 inches of linear travel. These factors should be considered to maximize the life of the Roh'lix.
- **Thrust**
  Roh'lix life is increased when the thrust setting is less then the maximum allowable catalog rating for a given block size. Selecting an oversized Roh'lix is advisable to achieve the greatest lifetime from the unit. In no case should the cap screws be tightened beyond the maximum thrust capacity of the unit.
- **Lead**
  A Roh'lix with a high lead will have longer life than units with a low lead because fewer bearing revolutions are required to travel an equal linear distance.
- **Overloading**
  Occasional slippage for short periods of time is acceptable, but frequent or extended periods of slippage will lower the expected linear life expectancy.
- **Other Factors to Consider for Maximum Life Expectancy**
  Operate the Roh'lix in an ambient temperature within -10°F to +180°F, keep shaft clean, keep speed as slow as practical, and minimize side loads and twisting loads on the Roh'lix.

Parts

Replacement parts are available from the factory for customer repairs. Replacement bearings for most **standard model Roh'lix Actuators** are listed below.

Table 2

Roh'lix Model Number	Bearing Assembly Kit Part Number (includes bearings, screws, & washers)
1	1100411
2	1100412
3	1100413
4	1100414
5	1100415

13200 Sixth Avenue North, Plymouth, MN 55441-5509
Phone 763.546.4300 ■ Fax 763.546.8260 ■ TOLL FREE 1.800.533.1731 ■ www.zero-max.com