ZERO-MAX

Phas-Lok Adjusting Hubs



Installation Instructions for Phas-Lok Adjusting Hub Assemblies

Tools Required

- Calibrated torque wrench with sockets for hub locking bolts
- Hex drive bits for phase-adjusting screws and hub setscrew
- Cleaning cloth

- These instructions are for standard series Phas-Lok Adjusting Hubs with normal running conditions. Special Phas-Lok Adjusting Hubs may have different drawings or instructions.

Installation

- Inspect shaft, Phas-Lok Hub, bore, key, and keyway making sure there are no burrs. Clean hub bore, shaft, and disc mounting face with a cleaning cloth. Clean bore and mating surface of mounted component (sprocket, timing pulley, gear, etc.).
- Machine bore of mounted component (sprocket, timing pulley, gear, etc.) to provide a clearance-fit with the Phas-Lok Hub pilot diameter, see Table 6. Mount the machined component to the Phas-Lok Disc with grade-5 or better screws, tightening to the specifications listed in Table 3. These screws are customer-supplied.
- Mount Phas-Lok Adjusting Hub Assembly onto shaft with installed key, leaving set-screw loose for the moment. Attach Phas-Lok Disc to Phas-Lok Hub, making sure disc post is clear, then loosely install locking bolts to maintain hold of disc to hub.
- Position Phas-Lok Hub Assembly linearly on the shaft to align with driver/driven component. Tighten hub set-screw to shaft according to torque requirements listed in Table 4. Alternately, when using a QD or Browning Bushing, install according to the manufacturer's instructions.
- Use hex drive bit and wrench to alternately tighten/loosen phase-adjusting screws as needed to obtain the desired phase adjustment ('clocking'). Next, use a torque wrench to tighten hub clamping screws according to recommended torque specifications listed in Table 2. Lastly, tighten phase adjusting screws against disc post to the specifications shown in Table 5 to prevent loosening during operation.

Removal

- Disconnect power from machine and lockout/tagout. General removal process is the reverse of the installation process.

⚠ **Caution: Rotating equipment is potentially dangerous and should be properly guarded. It is the responsibility of the machine builder, user, or operator to follow all applicable safety codes and provide a suitable guard. Make sure the machine is "locked out" and cannot be accidentally started during installation or maintenance of Phas-Lok.**

13200 Sixth Avenue North, Plymouth, MN 55441-5509
Phone 763.546.4300 ▪ Fax 763.546.8260 ▪ TOLL FREE 1.800.533.1731 ▪ www.zero-max.com

Phas-Lok Adjusting Hubs

Recommended Minimum Sprocket Size

Table 1

Minimum Sprocket Size (# Teeth)									
Chain	**25**	**35**	**41**	**40**	**50**	**60**	**80**	**100**	**120**
Series A	35	25	19	20	16	15	*	*	*
Series B	52	32	24	24	21	19	15	13	*
Series C	84	54	39	40	32	27	23	20	18

*Not recommended

Screw Sizes and Tightening Torque

Table 2

Hub Series	SAE Grade 5 Hub Clamping Cap Screw(s)	Tightening Torque
A	1/4-20 UNC	95 IN-LB
B	1/4-20 UNC	95 IN-LB
C	1/2-13 UNC	840 IN-LB

Table 3

Hub Series	SAE Grade 5 Component-Mounting Cap Screw(s)	Tightening Torque	Disc Threaded Hole Depth
A	1/4-20 UNC	95 IN-LB	0.500 MAX
B	1/4-20 UNC	348 IN-LB	0.485 MAX
C	1/2-13 UNC	840 IN-LB	0.750 MAX

Table 4

Hub Series	Hub Set-Screw Size	Tightening Torque
A	1/4-20 UNC	45 IN-LB
B	1/4-20 UNC	45 IN-LB
C	3/8-16 UNC	120 IN-LB

Table 5

Hub Series	Phase-Adjusting Screw Size	Tightening Torque
A	1/4-20 UNC	40 IN-LB
B	5/16-18 UNC	60 IN-LB
C	1/2-13 UNC	200 IN-LB

Table 6

Hub Series	Hub Pilot O.D.
A	1.250"
B	2.125"
C	3.500"

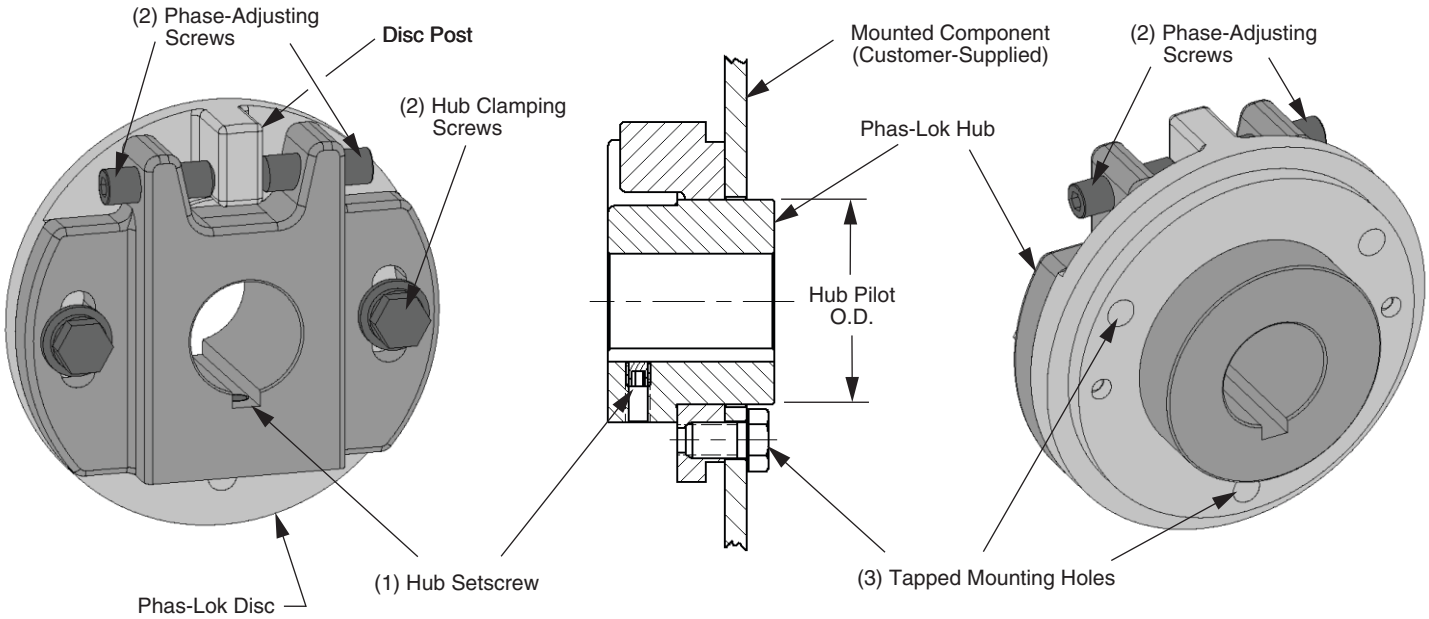

ZERO-MAX

13200 Sixth Avenue North, Plymouth, MN 55441-5509
Phone 763.546.4300 ▪ Fax 763.546.8260 ▪ TOLL FREE 1.800.533.1731 ▪ www.zero-max.com