ZERO-MAX®

Overload Safety Couplings

Torq-Tender® & H-TLC

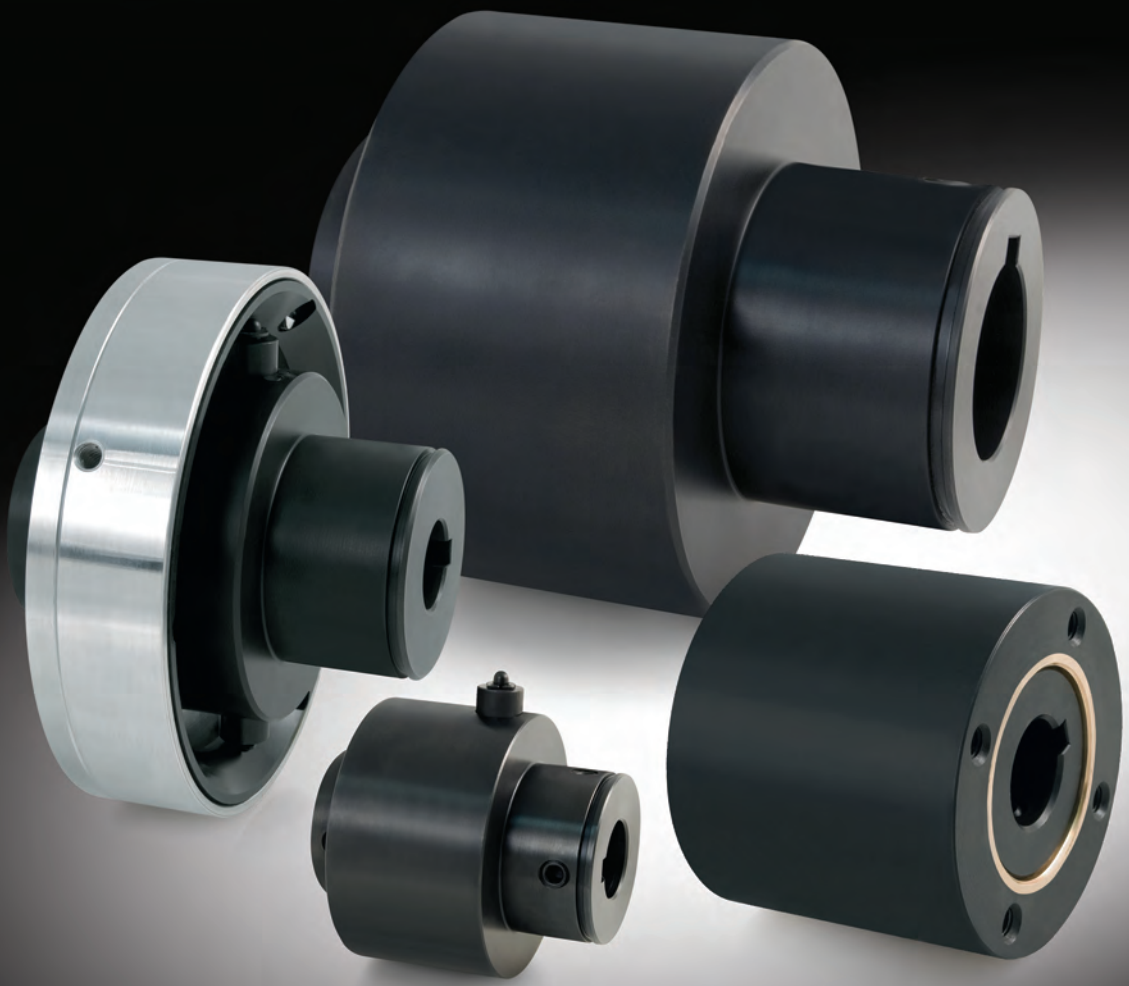

Torq-Tenders are Overload Safety Devices which provide reliable overload protection. When a jam-up or excessive loading occurs the Torq-Tender will reliably and quickly release to prevent system damage.

- Torq-Tenders are tamper-proof. Once installed, the torque value cannot be changed. This is an important feature that ensures the integrity of the machine design. Costly and potentially risky calibration procedures are **not** necessary. The torque value is controlled by the part number that is ordered. That value determines what spring is used during the assembly at the factory.
- The torque value can be changed in the field, however; the Torq-Tender must be disassembled and the springs replaced to achieve the new torque value.
- Standard Torq-Tenders are bidirectional. The torque value is the same regardless of rotation. If specified, the Torq-Tender can be configured at the factory to release at different torque ratings for different rotational directions.
- In the shaft-to-shaft coupling configuration, the Torq-Tender fulfills two functions, serving as a coupling between shafts, and as a torque overload protector. The Torq-Tender will accomodate angular shaft misalignment up to 1.5° and a maximum parallel misalignment of 0.005" to 0.015". Using shaft alignment tools to keep alignment as close as possible will provide the best performance for the Torq-Tender.
- The enclosed design of the Torq-Tender enables it to operate in a wide variety of industrial environments. Special designs and materials can be made to withstand even more adverse conditions.
- Torq-Tenders are made from durable heat treated steel for a long operational life.



The torque value is determined by the force of the springs that are installed in the unit. The spring force acts upon the slides that are part of the inner shaft. These slides transmit force that will hold the drive key into an engagement slot in the outer housing. When the torque load exceeds the rating, (determined by precision tempered torque springs) the Torq-Tender's drive key will pivot out of the engagement slot to disengage the Torq-Tender. After disengagement the torque limiter does not have significant resistance to rotation. Upon completion of one shaft rotation the torque limiter will automatically try to reengage. Once the overload is removed and speed reduced, the drive key will snap into the engagement slot and the Torq-Tender will be reset for the next overload event.

AFTER OVERLOAD OCCURS

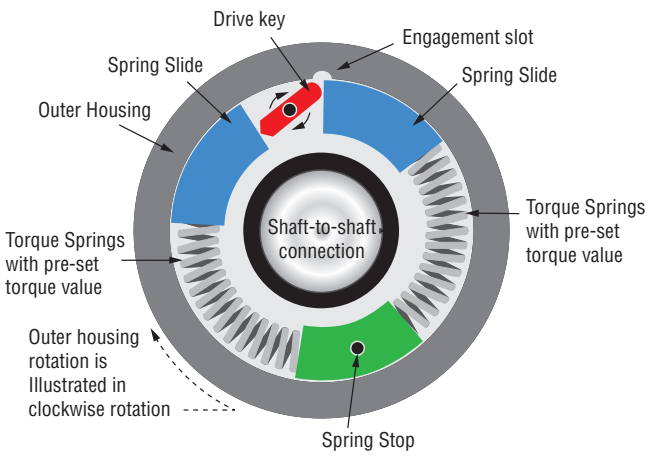

Shaft-To-Shaft Mount – Type C

The shaft to shaft mount option allows the Torq-Tender to function as a shaft coupling and a torque limiter. Either shaft can be used to drive the load unless an actuating pin model is used where the housing (F Bore) end must be the driver for proper pin operation (see instructions).

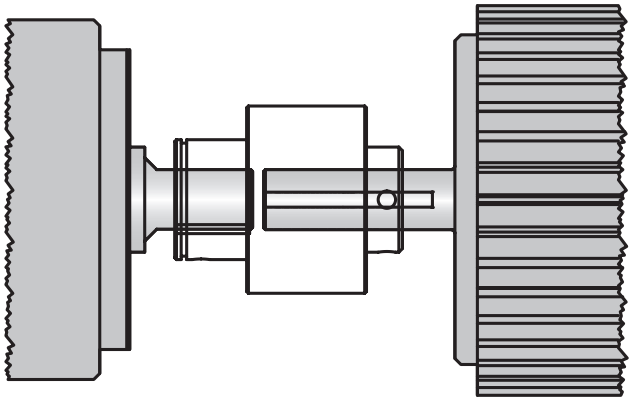

Through Shaft Mount – Type B

The Through Shaft Mount is intended to have a shaft pass though the full length of the Torq-Tender. A component such as a sprocket or sheave is mounted externally on the Torq-Tender. Either the shaft or the mounted component can be used to drive the load unless an actuating pin model is used where the mounted component must be the driver for proper pin operation (see instructions). When an overload occurs, the driven component will stop rotating while the driving component (shaft, pulley, sprocket etc.) will continue to rotate. A sleeve bearing (bronze bushing) is an integral part of the design that supports the side load created by the mounted component and allowing the housing to rotate on the shaft during an overload. **Note: An external keyway in the hub and retaining ring is standard on this design.**

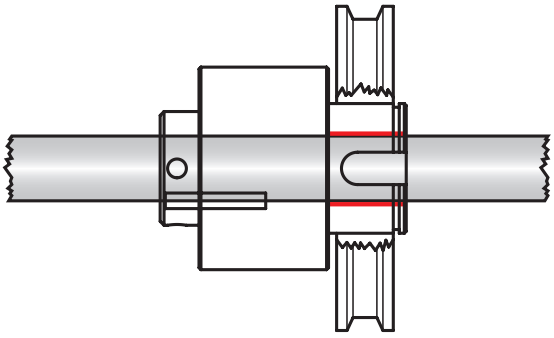



End of Shaft Mount – Type S

The End of Shaft Mount Type S is used in applications where the drive shaft is not long enough to reach the radial load. The type S model is designed to mount a type B or C style hub for sprockets and pulleys. Either the shaft or the mounted component can be used to drive the load unless an actuating pin model is used where the mounted component must be the driver for proper pin operation (see instructions). This model is available in 4 sizes: TT1X-S, TT2-S, TT2X-S, and TT3-S.

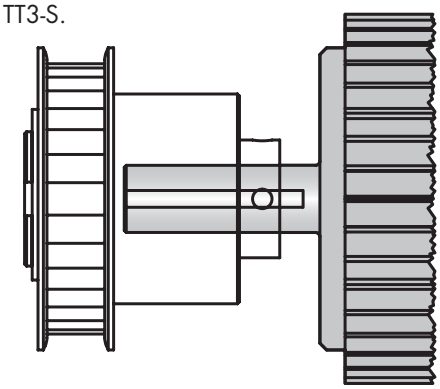

End of Shaft Mount – Type JF

The End of Shaft Mount-Type JF torque limiter is used where you have limited or reduced shaft length available. The Type JF model allows you to face mount a plate style sprocket or pulley to the torque limiter using bolts. Either the shaft or the mounted component can be used to drive the load unless an actuating pin model is used where the mounted component must be the driver for proper pin operation (see instructions). Since the mounted component is located very close to the bearing supports the overhung load is reduced.

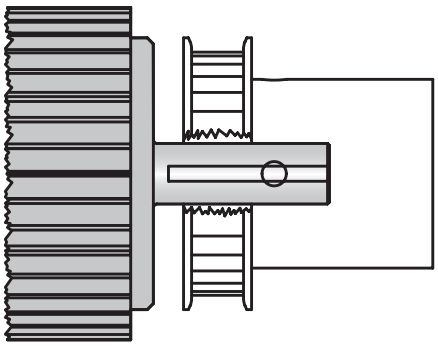

End of Shaft Mount – Type J

The End of Shaft Mount Type J offers the same benefits as the JF model. The type J model is designed to mount type B or C style hubs for sprockets and pulleys. Either the shaft or the mounted component can be used to drive the load unless an actuating pin model is used where the mounted component must be the driver for proper pin operation (see instructions). This model is available in 2 sizes: TT2J and TT3J.

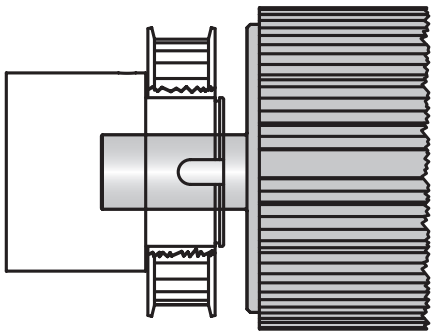

Shaft to Shaft – Type C

Models		TT1X	TT2	TT2X	TT3	TT3TAN	TT3X	TT4X
A	INCH	1.562	2.165	2.500	3.000	3.000	3.625	4.625
	(MM)	(39.7)	(55.0)	(63.5)	(76.2)	(76.2)	(92.1)	(117.5)
B	INCH	0.875	1.250	1.500	1.750	1.750	2.250	3.000
	(MM)	(22.2)	(31.7)	(38.1)	(44.4)	(44.4)	(57.2)	(76.2)
D	INCH	1.140	1.540	1.805	2.100	3.312	3.080	3.715
	(MM)	(29.0)	(39.1)	(45.8)	(53.3)	(84.1)	(78.2)	(94.4)
E	INCH	0.630	0.820	1.110	1.330	1.312	1.420	1.640
	(MM)	(16.0)	(20.8)	(28.2)	(33.8)	(33.3)	(36.1)	(41.6)
G	INCH	1.000	1.375	1.625	1.750	1.750	2.500	3.000
	(MM)	(25.4)	(34.9)	(41.3)	(44.4)	(44.4)	(63.5)	(76.2)
H	INCH	0.135	0.250	0.312	0.312	0.312	0.420	0.400
	(MM)	(3.4)	(6.4)	(7.9)	(7.9)	(7.9)	(10.7)	(10.2)
J	INCH	1.000	1.300	1.500	1.812	3.035	2.750	3.500
	(MM)	(25.4)	(33.0)	(38.1)	(46.0)	(77.1)	(69.8)	(88.9)
K	INCH	1.80	2.42	2.95	3.47	4.71	4.55	5.40
	(MM)	(45.7)	(61.5)	(74.9)	(88.1)	(119.6)	(115.6)	(137.2)
L	INCH	0.600	0.750	1.000	1.187	1.187	1.250	1.330
	(MM)	(15.2)	(19.1)	(25.4)	(30.1)	(30.1)	(31.7)	(33.8)
M	INCH	0.218	0.312	0.312	0.375	0.375	0.420	0.500
	(MM)	(5.5)	(7.9)	(7.9)	(9.5)	(9.5)	(10.7)	(12.7)

See chart on page 8 for bore sizes.

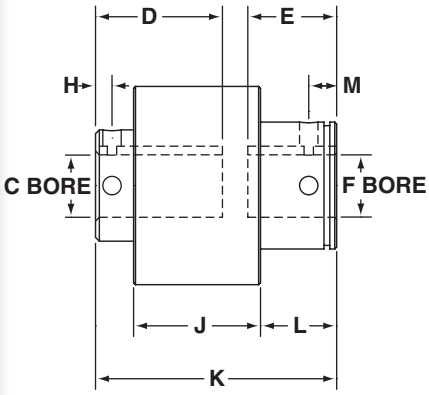

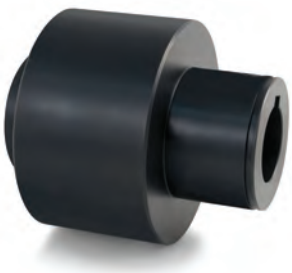

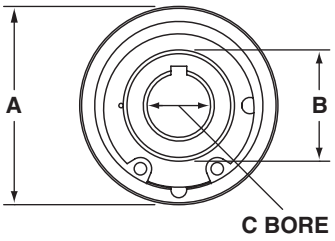

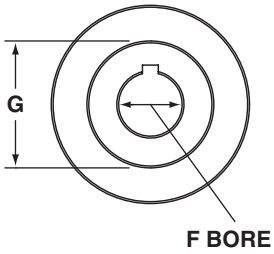

Through Shaft – Type B

Models		TT1X	TT2	TT2X	TT3	TT3TAN	TT3X	TT4X
A	INCH	1.562	2.165	2.500	3.000	3.000	3.625	4.625
	(MM)	(39.7)	(55.0)	(63.5)	(76.2)	(76.2)	(92.1)	(117.5)
B	INCH	0.875	1.250	1.500	1.750	1.750	2.250	3.000
	(MM)	(22.2)	(31.7)	(38.1)	(44.4)	(44.4)	(57.2)	(76.2)
D	INCH	1.140	1.540	1.805	2.100	3.312	3.080	3.715
	(MM)	(29.0)	(39.1)	(45.8)	(53.3)	(84.1)	(78.2)	(94.4)
G	INCH	1.000	1.375	1.625	1.750	1.750	2.500	3.000
	(MM)	(25.4)	(34.9)	(41.3)	(44.4)	(44.4)	(63.5)	(76.2)
H	INCH	0.135	0.250	0.312	0.312	0.312	0.420	0.400
	(MM)	(3.4)	(6.4)	(7.9)	(7.9)	(7.9)	(10.7)	(10.2)
J	INCH	1.000	1.300	1.500	1.812	3.035	2.750	3.500
	(MM)	(25.4)	(33.0)	(38.1)	(46.0)	(77.1)	(69.8)	(88.9)
K	INCH	1.80	2.42	2.95	3.47	4.71	4.55	5.40
	(MM)	(45.7)	(61.5)	(74.9)	(88.1)	(119.6)	(115.6)	(137.2)
L	INCH	0.600	0.750	1.000	1.187	1.187	1.250	1.330
	(MM)	(15.2)	(19.1)	(25.4)	(30.1)	(30.1)	(31.7)	(33.8)
N	INCH	0.500	0.625	0.875	1.062	1.062	1.080	1.125
	(MM)	(12.7)	(15.9)	(22.2)	(27.0)	(27.0)	(27.4)	(28.6)
O	INCH	0.250	0.312	0.375	0.375	0.375	0.625	0.750
	(MM)	(6.3)	(7.9)	(9.5)	(9.5)	(9.5)	(15.9)	(19.1)

D= Maximum key length

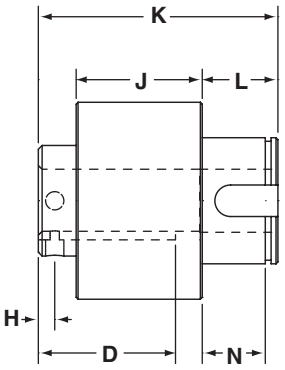



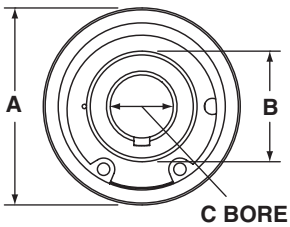

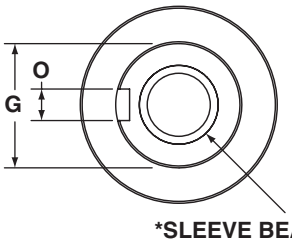

*The ID of the sleeve bearing will be sized to match the C Bore. When ordering this option, only specify one bore.

End of Shaft – Type S

Models		TT1X	TT2	TT2X	TT3
A	INCH (MM)	1.562 (39.7)	2.165 (55.0)	2.500 (63.5)	3.000 (76.2)
B	INCH (MM)	0.875 (22.2)	1.250 (31.7)	1.500 (38.1)	1.750 (44.4)
D	INCH (MM)	1.140 (29.0)	1.540 (39.1)	1.805 (45.8)	2.100 (53.3)
G	INCH (MM)	1.000 (25.4)	1.375 (34.9)	1.625 (41.3)	1.750 (44.4)
H	INCH (MM)	0.135 (3.4)	0.250 (6.4)	0.312 (7.9)	0.312 (7.9)
J	INCH (MM)	1.000 (25.4)	1.300 (33.0)	1.500 (38.1)	1.812 (46.0)
K	INCH (MM)	1.80 (45.7)	2.42 (61.5)	2.95 (74.9)	3.47 (88.1)
L	INCH (MM)	0.600 (15.2)	0.750 (19.1)	1.000 (25.4)	1.187 (30.1)
N	INCH (MM)	0.500 (12.7)	0.625 (15.9)	0.875 (22.2)	1.062 (27.0)
O	INCH (MN)	0.250 (6.3)	0.312 (7.9)	0.375 (9.5)	0.375 (9.5)

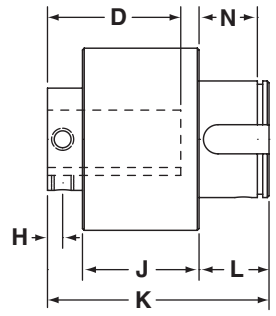



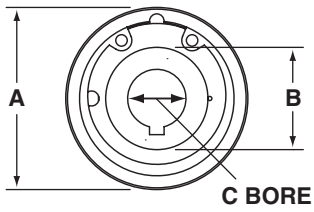

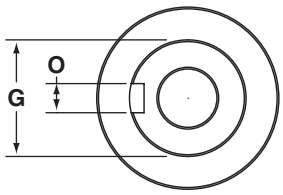

End of Shaft – Type JF

Models		TT1XJF	TT2JF	TT2XJF	TT3JF	TT3XJF	TT4XJF
A	INCH (MM)	1.562 (39.7)	2.165 (55.0)	2.500 (63.5)	3.000 (76.2)	3.625 (92.1)	4.625 (117.5)
K	INCH (MM)	1.500 (38.1)	1.885 (47.9)	2.250 (57.2)	2.560 (65.0)	3.550 (90.2)	4.375 (111.1)
M	INCH (MM)	0.187 (4.7)	0.282 (7.2)	0.325 (8.2)	0.370 (9.4)	0.400 (10.2)	0.375 (9.5)
P	INCH (MM)	0.875 (22.2)	1.200 (30.5)	1.500 (38.1)	1.625 (41.3)	2.125 (54.0)	2.625 (66.7)
Q	INCH (MM)	1.250 (31.7)	1.750 (44.4)	2.000 (50.8)	2.375 (60.3)	3.000 (76.2)	4.000 (101.6)
R	INCH	10-32 X 0.25DP	10-32 X 0.37DP	1/4-20 X 0.50DP	5/16-18 X 0.56DP	5/16-18 X 0.56DP	3/8-16 X 0.75DP

See chart on page 8 for bore sizes.

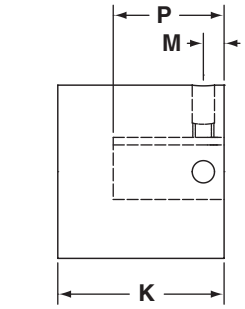

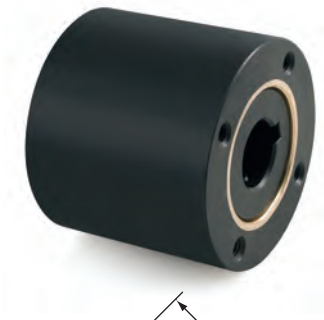

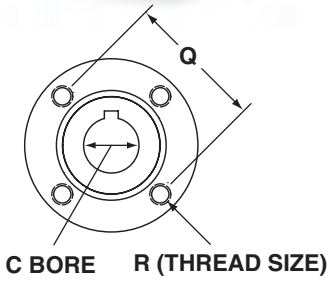

End of Shaft – Type J

Models		TT2	TT3
A	INCH (MM)	2.165 (55.0)	3.000 (76.2)
G	INCH (MM)	1.625 (41.3)	2.250 (57.2)
J	INCH (MM)	1.950 (49.5)	3.060 (77.7)
K	INCH (MM)	2.110 (53.6)	3.294 (83.7)
L	INCH (MM)	0.750 (19.1)	1.188 (30.2)
M	INCH (MM)	0.890 (22.6)	1.469 (37.3)
N	INCH (MM)	0.625 (15.9)	1.04 (26.4)
O	INCH (MM)	0.375 (9.5)	0.500 (12.7)

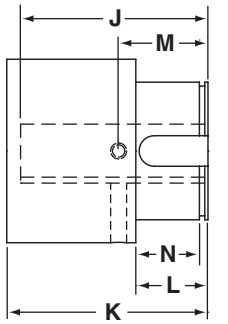



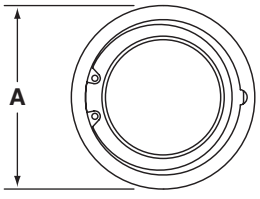

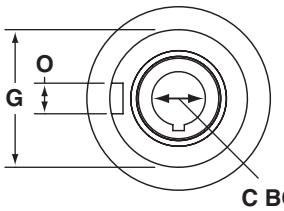

Type CP, BP, and SP (with Actuating Pin)

Models		TT1X	TT2	TT2X	TT3	TT3TAN	TT3X	TT4X
A	INCH (MM)	1.562 (39.7)	2.165 (55.0)	2.500 (63.5)	3.000 (76.2)	3.000 (76.2)	3.625 (92.1)	4.625 (117.5)
B	INCH (MM)	0.875 (22.2)	1.250 (31.7)	1.500 (38.1)	1.750 (44.4)	1.750 (44.4)	2.250 (57.2)	3.000 (76.2)
G	INCH (MM)	1.000 (25.4)	1.375 (34.9)	1.625 (41.3)	1.750 (44.4)	1.750 (44.4)	2.500 (63.5)	3.000 (76.2)
K	INCH (MM)	1.80 (45.7)	2.42 (61.5)	2.95 (74.9)	3.47 (88.1)	4.71 (119.6)	4.55 (115.6)	5.40 (137.2)
S	INCH (MM)	0.837 (21.5)	1.062 (27.0)	1.395 (35.4)	1.573 (40.0)	1.573 (40.0)	1.791 (45.5)	2.005 (50.9)
T	INCH (MM)	0.125 (3.2)	0.125 (3.2)	0.125 (3.2)	0.125 (3.2)	0.125 (3.2)	0.125 (3.2)	0.125 (3.2)
U	INCH (MM)	0.186 (4.7)	0.125 (3.2)	0.125 (3.2)	0.125 (3.2)	0.125 (3.2)	0.125 (3.2)	0.125 (3.2)
W	INCH (MM)	0.238 (6.0)	0.200 (5.1)	0.200 (5.1)	0.180 (4.6)	0.180 (4.6)	0.135 (3.4)	0.083 (2.1)

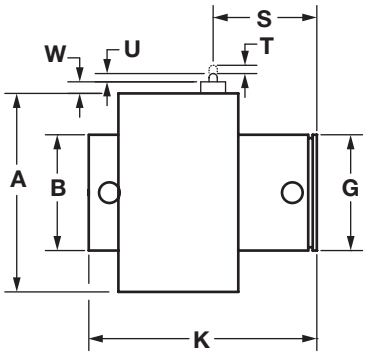



End of Shaft Type JFP (with Actuating Pin)

Models		TT1X	TT2	TT2X	TT3	TT3X	TT4X
A	INCH (MM)	1.562 (39.7)	2.165 (55.0)	2.500 (63.5)	3.000 (76.2)	3.625 (92.1)	4.625 (117.5)
K	INCH (MM)	1.500 (38.1)	1.885 (47.9)	2.250 (57.2)	2.560 (65.0)	3.550 (90.2)	4.375 (111.1)
Q	INCH (MM)	1.250 (31.7)	1.750 (44.4)	2.000 (50.8)	2.375 (60.3)	3.000 (76.2)	4.000 (101.6)
R	INCH (MM)	10-32 X 0.25DP	10-32 X 0.37DP	1/4-20 X 0.50DP	5/16-18 X 0.50DP	5/16-18 X 0.56DP	3/8-16 X 0.75DP
S	INCH (MM)	1.055 (26.8)	1.400 (35.6)	1.608 (40.8)	1.912 (48.6)	2.730 (69.3)	3.310 (84.1)
T	INCH (MM)	0.125 (3.2)	0.125 (3.2)	0.125 (3.2)	0.125 (3.2)	0.125 (3.2)	0.125 (3.2)
U	INCH (MM)	0.180 (4.6)	0.125 (3.2)	0.125 (3.2)	0.125 (3.2)	0.125 (3.2)	0.125 (3.2)
W	INCH (MM)	0.238 (6.0)	0.200 (5.1)	0.200 (5.1)	0.180 (4.6)	0.135 (3.4)	0.083 (2.1)

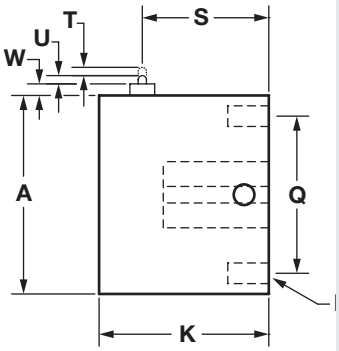

NOTE: The Actuating Pin Assembly is a simple pin which is forced out radially from the main body when overload occurs. When using this option, it is important to note that the housing (F bore) or external mounting hub end of the unit is the power source or input end. This part of the unit must continue to rotate for the extended pin to contact a customer supplied limit switch for shutdown or

End of Shaft Type JP (with Actuating Pin)

Models		TT2	TT3
A	INCH (MM)	2.165 (55.0)	3.000 (76.2)
G	INCH (MM)	1.625 (41.3)	2.250 (57.2)
K	INCH (MM)	2.110 (53.6)	3.294 (83.7)
N	INCH (MM)	0.625 (15.9)	1.040 (26.4)
O	INCH (MM)	0.375 (9.5)	0.500 (12.7)
S	INCH (MM)	1.010 (25.7)	1.627 (41.3)
T	INCH (MM)	0.125 (3.2)	0.125 (3.2)
U	INCH (MM)	0.125 (3.2)	0.125 (3.2)
W	INCH (MM)	0.200 (5.1)	0.180 (4.6)

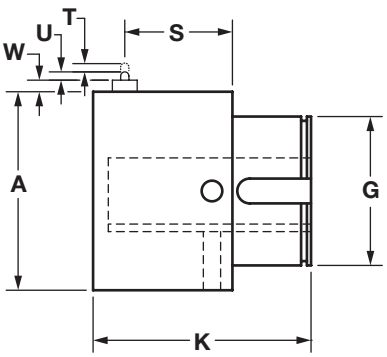

Type CD, BD, and SD (with Actuating Disc)

Models		TT1X	TT2	TT2X	TT3	TT3TAN	TT3X	TT4X
A	INCH (MM)	1.562 (39.7)	2.165 (55.0)	2.500 (63.5)	3.000 (76.2)	3.000 (76.2)	3.625 (92.1)	4.625 (117.5)
B	INCH (MM)	0.875 (22.2)	1.250 (31.7)	1.500 (38.1)	1.750 (44.4)	1.750 (44.4)	2.250 (57.2)	3.000 (76.2)
G	INCH (MM)	1.000 (25.4)	1.375 (34.9)	1.625 (41.3)	1.750 (44.4)	1.750 (44.4)	2.500 (63.5)	3.000 (76.2)
K	INCH (MM)	1.80 (45.7)	2.42 (61.5)	2.95 (74.9)	3.47 (88.1)	4.71 (119.6)	4.55 (115.6)	5.40 (137.2)
L	INCH (MM)	0.600 (15.2)	0.750 (19.1)	1.000 (25.4)	1.187 (30.1)	1.187 (30.1)	1.250 (31.7)	1.330 (33.8)
N	INCH (MM)	0.500 (12.7)	0.625 (15.9)	0.875 (22.2)	1.062 (27.0)	1.062 (27.0)	1.080 (27.4)	1.125 (28.6)
X	INCH (MM)	2.950 (74.9)	3.485 (88.5)	3.935 (99.9)	4.460 (113.3)	4.460 (113.3)	4.950 (125.7)	6.160 (156.5)
Y	INCH (MM)	0.970 (24.6)	0.970 (24.6)	0.970 (24.6)	0.970 (24.6)	0.970 (24.6)	0.970 (24.6)	1.185 (30.1)
Z	INCH (MM)	0.080 (2.0)	0.570 (14.5)	0.740 (18.8)	1.125 (28.6)	2.345 (59.6)	1.985 (50.4)	2.500 (63.5)
Z1	INCH (MM)	0.120 (3.0)	0.120 (3.0)	0.120 (3.0)	0.120 (3.0)	0.120 (3.0)	0.120 (3.0)	0.120 (3.0)

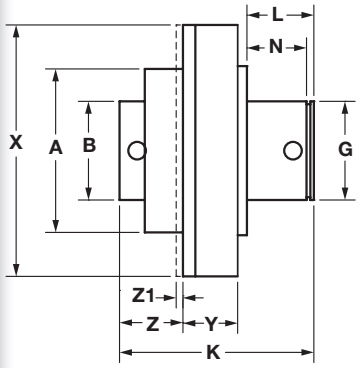



End of Shaft - Type JFD (with Actuating Disc)

Models		TT1X	TT2	TT2X	TT3	TT3X	TT4X
AA	INCH (MM)	1.530 (38.9)	2.060 (52.3)	2.450 (62.2)	2.895 (73.5)	3.550 (90.2)	4.525 (114.9)
K	INCH (MM)	1.500 (38.1)	1.885 (47.9)	2.250 (57.2)	2.560 (65.0)	3.550 (90.2)	4.375 (111.1)
Q	INCH (MM)	1.250 (31.7)	1.750 (44.4)	2.000 (50.8)	2.375 (60.3)	3.000 (76.2)	4.000 (101.6)
R	INCH	10-32 X 0.25DP	10-32 X 0.37DP	1/4-20 X 0.50DP	5/16-18 X 0.50DP	5/16-18 X 0.56DP	3/8-16 X 0.75DP
X	INCH (MM)	2.950 (74.9)	3.485 (88.5)	3.935 (99.9)	4.480 (113.8)	4.950 (125.7)	6.160 (156.5)
Y	INCH (MM)	0.970 (24.6)	0.970 (24.6)	0.970 (24.6)	0.970 (24.6)	0.970 (24.6)	1.185 (30.1)
Z	INCH (MM)	0.187 (4.7)	0.530 (13.5)	0.790 (20.1)	1.150 (29.2)	1.918 (48.7)	2.420 (61.5)
Z1	INCH (MM)	0.120 (3.0)	0.120 (3.0)	0.120 (3.0)	0.120 (3.0)	0.120 (3.0)	0.120 (3.0)

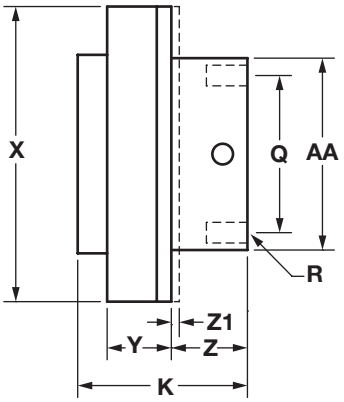

End of Shaft - Type JD (with Actuating Disc)

Models		TT2	TT3
A	INCH (MM)	2.165 (55.0)	3.000 (76.2)
G	INCH (MM)	1.625 (41.3)	2.250 (57.2)
K	INCH (MM)	2.110 (53.6)	3.294 (83.7)
L	INCH (MM)	0.750 (19.1)	1.187 (30.1)
N	INCH (MM)	0.625 (15.9)	1.040 (26.4)
O	INCH (MM)	0.375 (9.5)	0.500 (12.7)
X	INCH (MM)	3.485 (88.5)	4.480 (113.8)
Y	INCH (MM)	0.970 (24.6)	0.970 (24.6)
Z	INCH (MM)	0.900 (22.9)	2.060 (52.3)
Z1	INCH (MM)	0.120 (3.0)	0.120 (3.0)

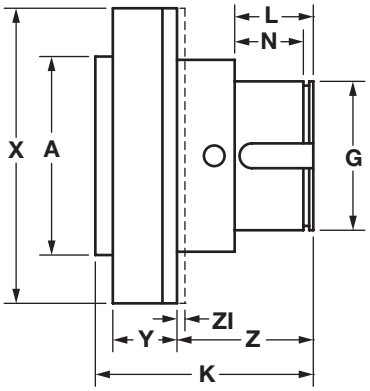

Determine Torque:

Torque is a twisting force that causes rotation and can be theoretically determined with the use of this simple formula:

$$\text{Torque (in. lbs.)} = \frac{63{,}025 \times \text{HP}}{\text{RPM}}$$

For example, if your application speed is 100 RPM and the HP rating is 1.5, then:

$$\text{T (in. lbs.)} = \frac{63{,}025 \times 1.5}{100}$$

Your calculated torque requirement= 945 in-lbs.

It is important to note that there are many factors involved in the selection of the torque value. The calculation above represents a theoretical way to determine a torque value.

Consideration should also be given to potentially high start up torques in the drive system. Most electric motors have start up torques that exceed normal run torque, which makes it necessary to select a torque as high as possible without exceeding the protection limit.

NOTE: Contact factory for applications running above 1800 RPM.

CAUTION: Because of inertia and/or energy in power transfer equipment, torque limiters will not protect against personal injury.

Torque Chart

Model	TT1X		TT2		TT2X		TT3		TT3TAN		TT3X		TT4X	
Torque Values	Inch Pounds	NM	Inch Pounds	NM	Inch Pounds	NM	Inch Pounds	NM	Inch Pounds	NM	Inch Pounds	NM	Inch Pounds	NM
	3	0.3	4	0.5	18	2.0	18	2.0	240	27.1	300	33.9	750	84.7
	5	0.6	8	0.9	24	2.7	24	2.7	300	33.9	400	45.2	1000	113.0
	8	0.9	12	1.4	28	3.2	36	4.1	360	40.7	500	56.5	1250	141.2
	10	1.1	18	2.0	40	4.5	40	4.5	440	49.7	650	73.4	1500	169.5
	12	1.4	25	2.8	50	5.6	50	5.6	500	56.5	750	84.7	1750	197.7
	15	1.7	30	3.4	60	6.8	60	6.8	600	67.8	850	96.0	2000	226.0
	20	2.3	40	4.5	90	10.2	80	9.0	700	79.1	1000	113.0	2250	254.2
	25	2.8	50	5.6	100	11.3	100	11.3	840	94.9	1150	129.9	2500	282.5
	30	3.4	60	6.8	120	13.6	120	13.6	1000	113.0	1300	146.9	2750	310.7
	40	4.5	85	9.6	135	15.3	150	16.9			1500	169.5	3000	339.0
	50	5.6	100	11.3	150	16.9	180	20.3						
	60	6.8	125	14.1	180	20.3	220	24.9						
			140	15.8	200	22.6	250	28.2						
					250	28.2	300	33.9						
					300	33.9	350	39.5						
					350	39.5	420	47.5						
							500	56.5						

Bore Capacity Chart

Model	Minimum Bore	Maximum Shaft (C) Bore	Maximum Housing (F) Bore	Torque Range		Shipping Weight
	INCH (MM)	INCH (MM)	INCH (MM)	Inch Pounds	Newton Meters	Pounds (Kg)
TT1X	0.250 (6)	0.500 (12)	0.625 (15)	3 to 60 *	0.3 to 6.8 *	1/2 (0.23)
TT2	0.3125 (8)	0.625 (16)	0.875 (22)	4 to 140 *	0.5 to 15.8 *	1 1/4 (0.57)
TT2X	0.375 (10)	0.750 (20)	1.00 (25)	18 to 350 *	2.0 to 39.5 *	2 1/4 (1.0)
TT3	0.500 (14)	1.125 (28)	1.125 (28)	18 to 500 *	2.0 to 56.5 *	3 1/4 (1.47)
TT3TAN	0.500 (14)	1.125 (28)	1.125 (28)	240 to 1000 *	27.1 to 113.0 *	5 (2.27)
TT3X	0.750 (19)	1.500 (38)	1.500 (38)	300 to 1500 *	33.9 to 169.5 *	8 (3.63)
TT4X	0.750 (19)	1.750 (45)	1.875 (48)	750 to 3000 *	84.7 to 339.0 *	15 (6.8)

* See Torque Chart

Torq-Tender® Applications

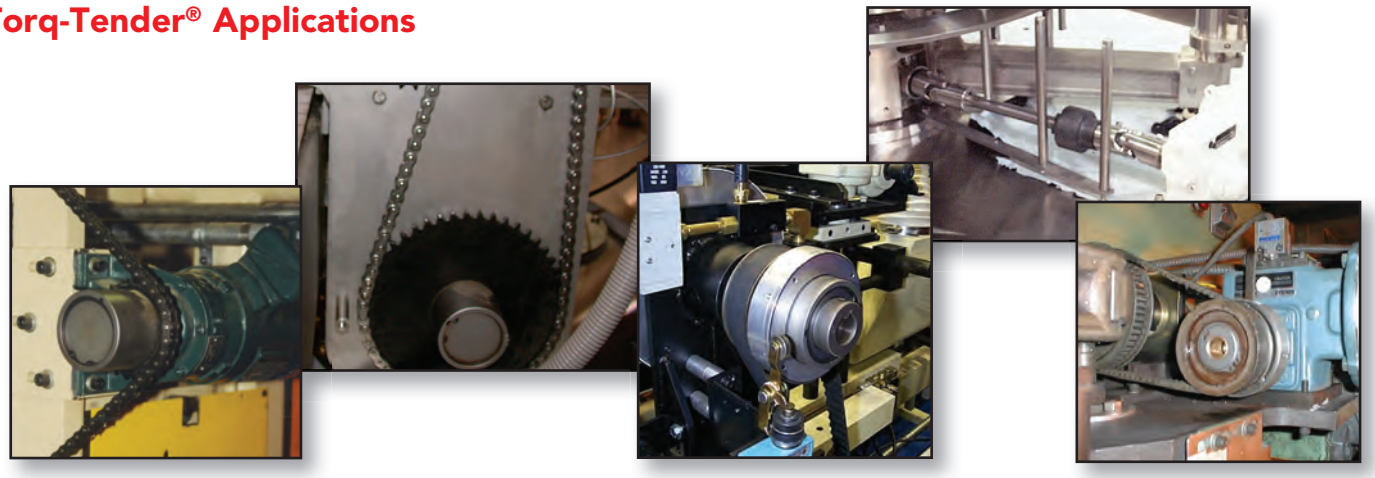

Part Numbering Structure

SIZE – **CONFIGURATION** | **F BORE DIAMETER** | **C BORE DIAMETER** | **TORQUE VALUE**

Code

TT1X
TT2
TT2X
TT3
TT3TAN
TT3X
TT4X

Code	Type of Mount
C	Shaft to Shaft Coupling
CP	Shaft to Shaft Coupling with Actuating Pin
CD	Shaft to Shaft Coupling with Actuating Disc
B	Through Shaft
BP	Through Shaft with Actuating Pin
BD	Through Shaft with Actuating Disc
J	End of Shaft Type J
JP	End of Shaft Type J with Actuating Pin
JD	End of Shaft Type J with Actuating Disc
JF	End of Shaft Type JF
JFP	End of Shaft Type JF with Actuating Pin
JFD	End of Shaft Type JF with Actuating Disc
S	End of Shaft Mount Outboard load
SP	End of Shaft Mount Outboard load with Actuating Pin
SD	End of Shaft Mount Outboard load with Actuating Disc

Specify for C, CP, and CD otherwise omit

Specify for all configurations

in - lbs.

See Chart.

Select the inch pound value from the list of values available for the specific size

See Bore Capacity Chart

All bores over 0.438" or 10mm will come with the standard keyway

Note: It is important to correctly identify the different bores for the Configurations CP and CD. These options require an external device to interface with the Torque Tender such as a proximity switch. How the bores are specified will affect the location of the Actuation Pin and Actuation Disc. Please contact the factory if further clarification is needed.

Example:
- Size TT3
- Shaft to Shaft Configuration
- Actuating Disc option
- F bore is 25mm
- C bore is 3/4"
- Torque value is 150 in-lbs.

Model code is:
TT3-CD – 25mm – 3/4" – 150

Standard Keyways Inch Bore Hubs

Bore Size		Keyway
Over	To	
0.438	0.562	0.125 x 0.062
0.562	0.875	0.187 x 0.094
0.875	1.250	0.250 x 0.125
1.250	1.375	0.312 x 0.156
1.375	1.750	0.375 x 0.187

Inch bores are supplied with inch size setscrews.

Standard Keyways Metric Bore Hubs

Bore Size		Keyway	Bore Size		Keyway
Over	To		Over	To	
10	12	4 x 1.8	58	65	18 x 4.4
12	17	5 x 2.3	65	75	20 x 4.9
17	22	6 x 2.8	75	85	22 x 5.4
22	30	8 x 3.3	85	95	25 x 5.4
30	38	10 x 3.3	95	110	28 x 6.4
38	44	12 x 3.3	110	130	32 x 7.4
44	50	14 x 3.8	130	150	36 x 8.4

Metric bores are supplied with metric size setscrews.

Custom Designs



The Intelligent Alternative to Friction-Type Torque Limiters.

The unique features in the Zero-Max H-TLC give the designer wider parameters in solving overload problems.

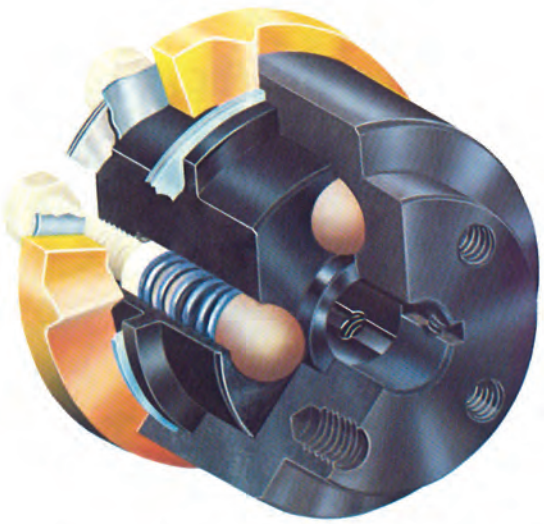

H-TLC Is Durable. The H-TLC torque limiter is designed for hostile environments. In many applications, a torque limiter may wait for months or years before it is required to disengage. During this time, the torque limiter may be subjected to moisture, corrosion, acids, salts or any number of other contaminants which inhibit the proper operation of the torque limiter and prevent disengagement.

The H-TLC will never rust because its major components are designed from special polymer materials that are resistant to water, salts, mild acids and most other contaminants. Even in temperatures from -40°F to +180°F (-40°C to +82°C), the H-TLC still withstands many corrosive elements and abuse.

H-TLC Is Dependable. It works on a spring loaded convex pin and detent design which reacts to overloads, but not to lubricants. Unlike friction-type designs, you can submerge an H-TLC in oil and still depend on precise disengagement at your design limits.

H-TLC Is Repeatable. Unlike friction-type torque limiters the H-TLC does not generate an amount of heat which can alter the transmittable torque. When a friction-type torque limiter disengages, it generates heat which often alters its disengagement characteristics.

The H-TLC's resilient fiber reinforced nylon and acetal materials will not build up, or retain, the kind of heat seen in friction designs.

The Torque Setting Is Adjustable. If operating conditions require periodic changes in torque settings, the H-TLC gives you that ability. Simply adjust the unit's external torque adjustment screws until the desired new torque setting is reached.

The H-TLC Will Trigger Automatic Alarm and Shut-Down Systems.
One of the H-TLC's most important special features is its ingeniously simple and inexpensive actuating disc assembly. The optional actuating disc is used to provide a mechanical displacement that can be sensed by a customer supplied limit switch to initiate the proper response.



Multi or Single Position Re-Engagement.
The H-TLC-500 has 4 re-engagement positions and the H-TLC-1000 has 6. If your application must maintain phase, you can order special H-TLC units with only a single re-engagement point. The single position H-TLC torque limiters torque rating will vary from the catalog ratings (consult factory).

Model	Torque Range		Housing (F) Bore		Shaft (C) Bore		Shipping Weight
			Minimum Bore	Maximum Bore	Minimum Bore	Maximum Bore	
	Inch Pounds	Newton Meters	INCH (MM)	INCH (MM)	INCH (MM)	INCH (MM)	Pounds (Kg)
H-TLC-500	4 to 150 *	0.5 to 16.9 *	0.250 (8)	0.750 (18)	0.250 (8)	0.563 (15)	1/2 (0.23)
H-TLC-1000	40 to 500 *	4.5 to 56.5 *	0.500 (13)	1.250 (30)	0.500 (13)	1.125 (28)	1 (0.45)

* See Torque Chart

Dimensions			
Models		500	1000
A	INCH (MM)	2.00 (50.8)	3.20 (81.3)
B	INCH (MM)	1.49 (37.8)	2.37 (60.2)
D	INCH (MM)	1.625 (41.3)	2.230 (56.6)
E	INCH (MM)	0.855 (21.7)	1.210 (30.7)
G	INCH (MM)	1.49 (37.8)	2.22 (56.4)
H	INCH (MM)	0.250 (6.3)	0.315 (8)
H1	INCH (MM)	1.250 (31.7)	1.625 (41.3)
I	INCH (MM)	0.563 (14.3)	0.520 (13.2)
J	INCH (MM)	1.187 (30.1)	1.81 (58.4)
K	INCH (MM)	2.50 (63.5)	3.45 (87.6)
L	INCH (MM)	0.750 (19)	1.12 (15.9)
M	INCH (MM)	0.375 (9.5)	0.400 (10.2)
Q	INCH (MM)	1.125 (28.6)	1.687 (42.8)
R	INCH	1/4-20 x 1/2 DP	5/16-18 x 3/4 DP
X	INCH (MM)	2.50 (63.5)	4.040 (102.6)
Z	INCH (MM)	2.275 (57.8)	3.270 (83.1)
Z1	INCH (MM)	2.125 (54)	3.110 (79)

H-TLC Type C

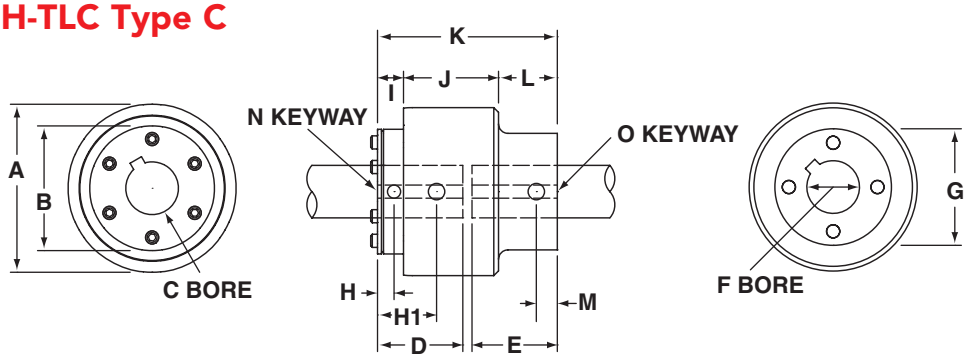

H-TLC Type B

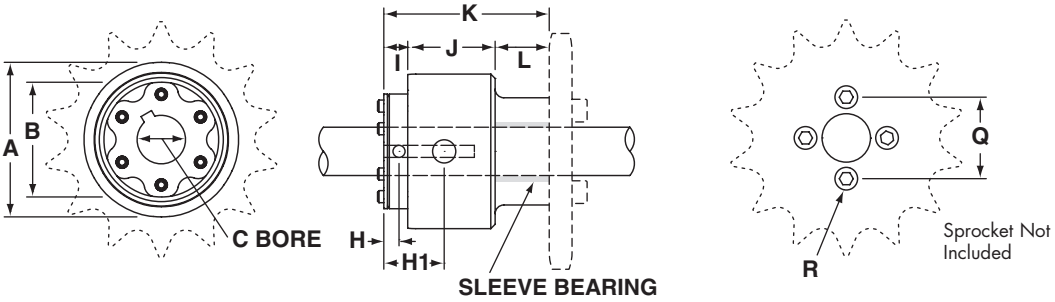

H-TLC Type CD and BD (with Actuating Disc)

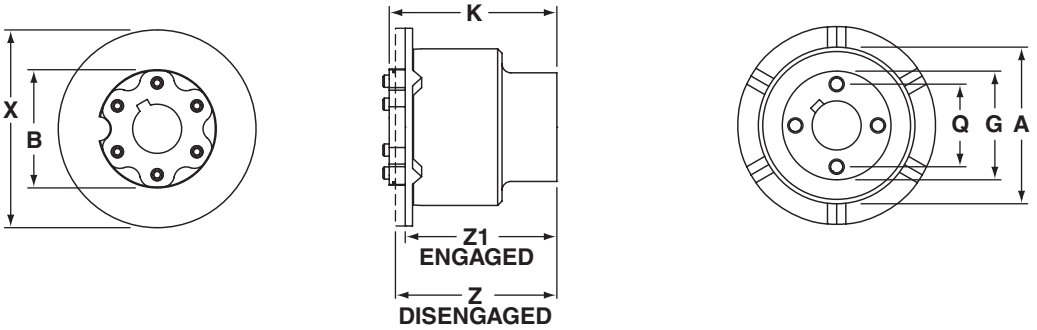

Part Numbering Structure

SIZE – **CONFIGURATION** | **F BORE DIAMETER** | **C BORE DIAMETER** | **TORQUE VALUE**

Code
H-TLC-500
H-TLC-1000

Code	Type of Mount
C	Shaft to Shaft Mount
CD	Shaft to Shaft Mount with Actuating Disc
B	Through Shaft Mount
BD	Through Shaft Mount with Actuating Disc

Specify for C and CD otherwise omit

Specify for all configurations

See Bore Capacity Chart

All bores over 0.438" or 10mm will come with the standard keyway

Note: It is important to correctly identify the different bores for the Configuration CD. These options require an external device to interface with the H-TLC such as a proximity switch. How the bores are specified will affect the location of the Actuation Disc. Please contact the factory if further clarification is needed.

Code		
Series	Code	Torque Range
500 Series	Blue	4 to 60 In-lbs. 0.5 to 6.8 Nm
	Red	40 to 125 In-lbs. 4.5 to 14.1 Nm
	Gold	100 to 150 In-lbs. 11.3 to 16.9 Nm
1000 Series	Blue	40 to 150 In-lbs. 4.5 to 16.9 Nm
	Red	140 to 350 In-lbs. 15.8 to 39.5 Nm
	Gold	300 to 500 In-lbs. 33.9 to 56.5 Nm

Example:
- Size H-TLC
- Shaft to Shaft Configuration
- Actuating Disc option
- F bore is 25mm
- C bore is 3/4"
- Torque value is 300 to 500 in-lbs.

Model code is:
H-TLC-1000-CD 25mm 3/4" Gold

PRECISE. RELIABLE. ROBUST. AVAILABLE.

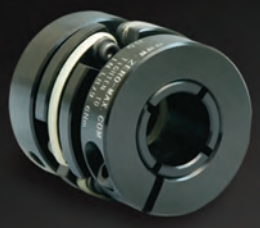

CD® Couplings

High-performance couplings that outperform and outlast bellows and steel disc designs. The unique design of the composite disc enables the CD Couplings to withstand punishing applications and deliver high precision performance. Fully Customizable.

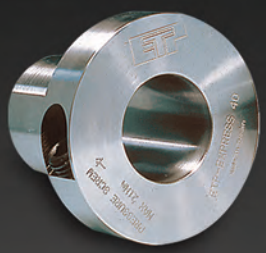

Keyless Shaft Locking Devices

ETP® keyless connections and Posi-Lok® keyless bushings provide quick, easy and accurate assembly of mounted shaft components. Both inch and metric bore sizes are available from stock.

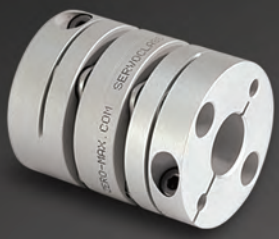

ServoClass® Couplings

Designed for demanding servomotor applications. Zero backlash, high torsional stiffness, high speed design. Features flexible metal discs for high misalignment capacity and keyless clamp-type mounting hubs.

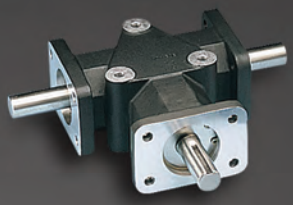

Crown Gear Drives

Available in 5-sizes, 3 configurations, and with 1:1 and 2:1 ratios. High quality AGMA class 10 spiral bevel gears. Stainless steel shafts and either black anodized or IP65-Rated nickel-plated aluminum housing.



Schmidt Offset Couplings

Designed to handle high amounts (up to 17") of parallel shaft offset with constant angular velocity. Standard models with torque capacities up to 459,000 in-lbs and extensive custom capabilities.



Adjustable Speed Drives

Easy to install and maintenance free. Zero-Max® Drives offer infinitely variable speeds from 0 rpm to 1/4 of input rpm. 5 models with torque ranges from 12 in-lbs to 200 in-lbs.

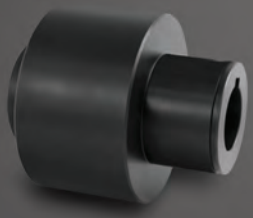

Overload Safety Couplings

Torque Tender® Couplings provide reliable overload protection in any mechanical power transmission system. Full selection of styles and sizes with set-point torque ranges from 3 to 3,000 in-lbs.



Roh'Lix® Linear Actuators

Simple conversion of rotary motion into precise linear motion. Available in five models and multiple configurations. Roh'Lix actuators have thrust ratings from 5 to 200 lbs. All models feature built-in overload protection.



Control-Flex Couplings

Zero backlash couplings designed for encoder and instrumentation type applications. Features high misalignment capacity, constant velocity, and an electrically isolated hub design.

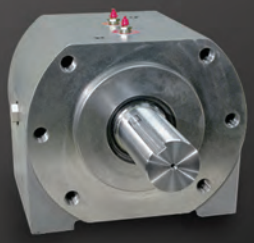

OHLA® Overhung Load Adaptors

Designed to protect hydraulic motors and pumps from radial/axial loads and to provide additional seal protection. 11 models available for mounts from SAE A to SAE F. Fully customizable.

Warranty. Zero-Max, Inc. the manufacturer, warrants that for a period of 12 months from date of shipment it will repair, or at its option, replace any new apparatus which proves defective in material or workmanship, or which does not conform to applicable drawings and specifications approved by the manufacturer. All repairs and replacements shall be F.O.B. factory. All claims must be made in writing to the manufacturer. ● In no event and under no circumstances shall manufacturer be liable for (a) damages in shipment; (b) failures or damages due to misuse, abuse, improper installation or abnormal conditions of temperature, dirt, water or corrosives; (c) failures due to operation, intentional or otherwise, above rated capacities, and (d) non-authorized expenses for removal, inspection, transportation, repair or rework. Nor shall manufacturer ever be liable for consequential and incidental damages, or in any amount greater than the purchase price of the apparatus. ● Zero Max, Inc. reserves the right to discontinue models or to change specifications at any time without notice. No discontinuance or change shall create any liability on the part of Zero-Max, Inc. in respect to its products in the hands of customers or products on order not incorporating such changes even though delivered after any such change. ● This warranty is in LIEU OF ALL OTHER WARRANTIES, EXPRESS OR IMPLIED, INCLUDING (BUT NOT LIMITED TO) ANY IMPLIED WARRANTIES OF MERCHANTABILITY OR FITNESS FOR A PARTICULAR PURPOSE. THE TERMS OF THIS WARRANTY CONSTITUTE ALL BUYER'S OR USER'S SOLE AND EXCLUSIVE REMEDY, AND ARE IN LIEU OF ANY RIGHT TO RECOVER FOR NEGLIGENCE, BREACH OF WARRANTY, STRICT TORT LIABILITY OR UPON ANY OTHER THEORY. Any legal proceedings arising out of the sale or use of this apparatus must be commenced within 18 months of the date of purchase. ● CAUTION: Rotating equipment must be guarded. Also refer to OSHA specifications and recommendations. ● Zero-Max®, CD®, ETP®, ServoClass®, Torq-Tender®, Posi-Lok®, Roh'Lix®, and OHLA® are registered trademarks of Zero-Max, Inc. In U.S.A.

©Zero-Max, Inc., All Rights Reserved
Printed in U.S.A., Rev1.08S

ZERO-MAX®

13200 Sixth Avenue North, Plymouth, Minnesota 55441-5509
Phone 800.533.1731 763.546.4300 FAX 763.546.8260

zero-max.com