ZERO-MAX

Adjustable Speed Drives



A Zero-Max Drive is a mechanical adjustable speed drive. Five sizes provide constant torque of 12 to 200 inch pounds throughout the speed range. The speed range is infinitely variable from 0 to 1/4 of the input speed under full rated load. This is generally stated as 0-400 RPM assuming an input of 1800 RPM.

For lower speed/higher torque applications, some Zero-Max Drives are available with right angle gearheads. Some Zero-Max Drives may be purchased with standard electric motors or they may be connected to any rotating power source up to 2000 RPM. Speed adjustments are easily made by moving a lever control through an arc or turning the handwheel of a screw type control. In either case, precise speed control settings are possible.

Over 1 million Zero-Max Drives have been put to work in a wide variety of applications. They are available from distributors in all major markets throughout the world.



Features	Benefits
Compact	Easy to handle/compact
Simple to install	No special wiring/training
Simple operation	Repeatable & easy to operate with lever or screw control
Use anywhere on machine	Accepts input to 2,000 RPM. Ideal as a secondary drive
Constant torque	Delivers constant torque throughout the speed range
4:1 speed reduction	Often usable without additional speed reduction
Change speed anytime	Speed set-ups are made quickly and easily
Change speed frequently	Permits slow or fast, small or large speed changes
Change speed continuously	Ideal for dancer applications/constant speed changes
Leave at one setting	No daily speed cycling
Accurate speed holding	No “wear-in” period/constant speed operation
Accepts any input	World’s most versatile, economical secondary drive
Goes to zero output	Ideal for use as a clutch
Shaft/control/motor options	Versatile
Infinitely adjustable	0-400 RPM speed range with 1800 RPM input

Match the Zero-Max® Drive to These Components

To achieve the exact performance characteristics you desire, Zero-Max provides the following matching components:

For Model E and JK Drives, a right angle gearhead and selection of motors are available.

For models Y, QX and ZX Drives, C-Flange adapters are available for connecting customer supplied motors to the drive you have selected.

Lever control is standard on all drives. Optional controls include: screw control, extended screw control, extended lever control, extended control shaft, microdial control, plus flatted and drilled control levers.

Direction of output rotation must be specified and is independent of input direction. Model numbers ending in "1" are CCW output, "2" are CW output and "3" are reversible.

Unidirectional Drives

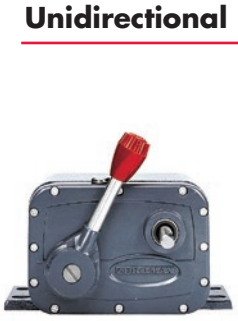

E Models
1, 2, 41 or 42
Torque Rating 12in.lbs.
Speed Range 0-400.
Normal Input 1/4-1/3 H.P.



JK Models
1, 2, 41 or 42
Torque Rating 25in.lbs.
Speed Range 0-400.
Normal Input 1/4-1/3 H.P.



Y Models
1, 2, 41, or 42
Torque Rating 60in.lbs.
Speed Range 0-400.
Normal Input 1/2 H.P.



QX Models
1, 2, 41 or 42
Torque Rating 100in.lbs.
Speed Range 0-400.
Normal Input 3/4 H.P.

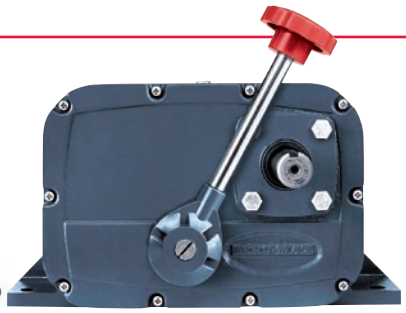

ZX Models
1, 2, 41 or 42
Torque Rating 200in.lbs.
Speed Range 0-400.
Normal Input 1-1/2H.P.

Reversible Drives



E Model 3
Torque Rating 12in.lbs.
Speed Range 400-0-400.
Normal Input 1/4-1/3 H.P.



JK Model 3
Torque Rating 25in.lbs.
Speed Range 400-0-400.
Normal Input 1/4-1/3 H.P.

Gearhead



Right angle gearheads available for E and JK Models.
Right Angle - 4 Models
W1 4:1 W2 10:1
W3 20:1 W4 40:1

Motors



Many popular voltage, Hz, phase and enclosures are available for use with drive.
E Models 1, 2, 3/
JK Models 1, 2 and 3

C-Face Adapters



MODEL CFY
Includes coupling for 56 frame motor.



MODEL CFQ
Includes coupling for 56 frame motor.



MODEL CFZ
Includes coupling for 56 frame motor.

All C-Face Adapters will accept 56, 143T and 145T frame motors.



New Zero-Max Configurable 3D CAD Downloads.
www.zero-max.com

Standard Lever Type Control

The lever control can be removed from its customary 12 o'clock position and moved to a 6 or 9 o'clock position on E and JK Models and to any position on Y, QX and ZX Models that will not interfere with the casebody or shaft. Flatted and drilled, as well as extended levers, are available for easy attachment to any kind of remote control, or for use on tension control applications.



Standard Lever

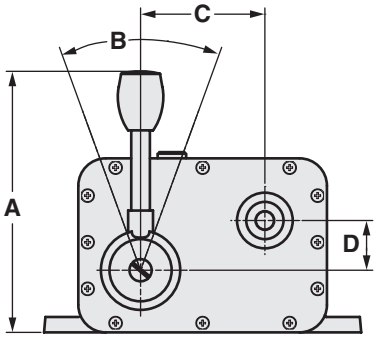

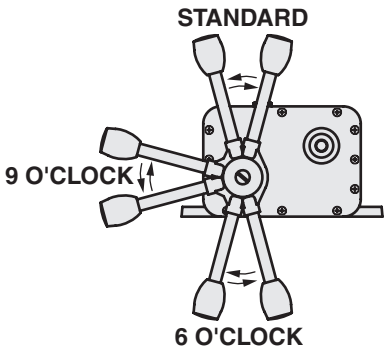

Lever Control Dimensions					Lever Torque	
Drive Model	A	B	C	D	(Running, no load)	(Not running, full load)
E	5.25	52°	2.50	1.00	7 in. lbs.	20 in. lbs.
JK	5.25	52°	2.50	1.00	7 in. lbs.	35 in. lbs.
Y	6.75	52°	3.25	1.68	15 in. lbs.	66 in. lbs.
QX	8.25	54°	3.55	1.90	36 in. lbs.	90 in. lbs.
ZX	10.00	63°	3.06	2.40	50 in. lbs.	160 in. lbs.

Optional Screw Type Control

All Zero-Max Drives are available with screw control. Screw controls give very precise control of speed and many kinds of remote control attachments are easily made. They are positive and easy to calibrate. Kits are available for adding screw control to drives in the field. The hand-wheel can be mounted on either end of the screw.

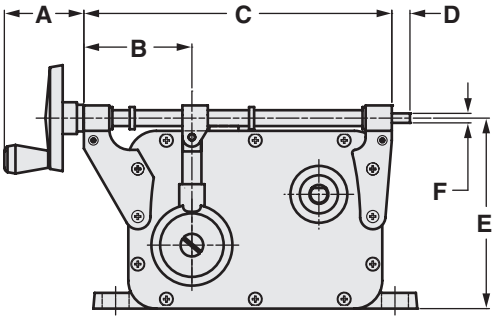



Screw Control

SCREW CONTROL DIMENSIONS							Number of Screw Turns	Screw Torque (inch-Lbs.)
Drive Model	A	B	C	D	E	F		
E__SC	1.50	2.12	6.06	0.37	3.75	0.18	38	2 in. lbs.
JK__SC	1.50	2.12	6.06	0.37	3.75	0.18	38	2 in. lbs.
Y__SC	1.50	2.25	7.42	0.44	4.58	0.18	50	3 in. lbs.
QX__SC	2.12	2.87	8.81	0.37	5.87	0.25	68	4 in. lbs.
ZX__SC	2.12	6.12	12.31	0.50	7.44	0.31	91	4 in. lbs.

Optional Microdial Type Control

Drive models E, JK, and Y are available with Microdial control. The Microdial is an enhanced Screw control that will provide the user with a numerical value that will correspond to a given speed setting. For added flexibility, these units can be ordered with the Microdial counter on either end of the control. The Microdial is ideal for applications that require the speed setting to be adjusted often and need a high level of repeatability. Kits are available for adding the Microdial control to drives in the field.

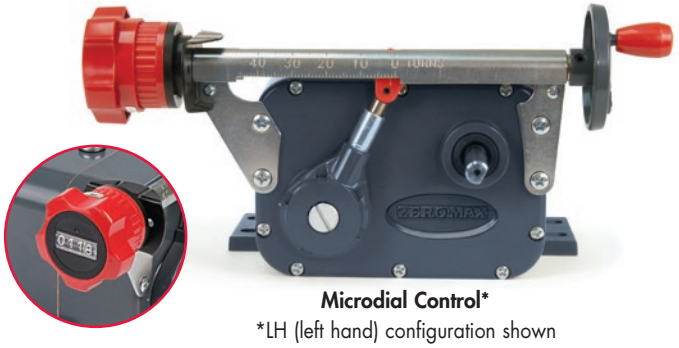

Microdial Control*

*LH (left hand) configuration shown

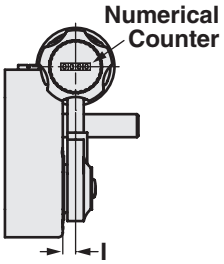

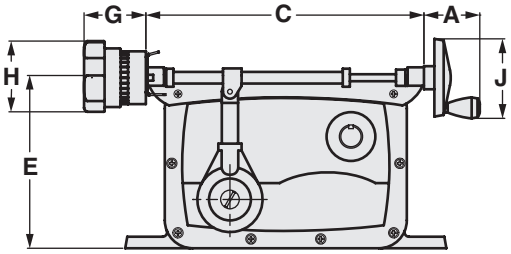

Type MD-LH

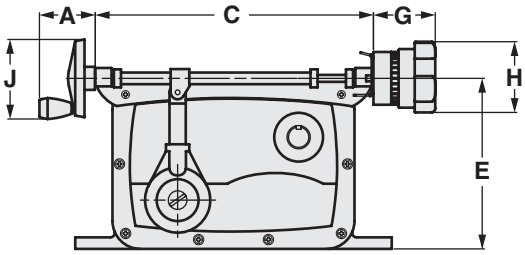

Type MD-RH

MICRODIAL DIMENSIONS								Numerical Counter Range
Drive Model	A	C	E	G	H	I	J	
E__MD-__	1.50	6.12	3.75	1.66	1.97	0.25	2.14	0-76
JK__MD-__	1.50	6.12	3.75	1.66	1.97	0.25	2.14	0-76
Y__MD-__	1.50	7.42	4.58	1.66	1.97	0.34	2.14	0-100

Drive Operating Characteristics

Input Speed should not exceed 2,000 RPM. There is no minimum, but as input speeds approach zero, slight variations in the angular velocity of the output may become noticeable. It is much better to use higher input speeds and take as much reduction as possible from the output shaft to maximize precise speed control. Direction of the input does not affect direction of output but does affect the speed range and performance of the Zero-Max Drive. The recommended input rotation direction in relation to output is given below. If output speeds are substantially in excess of rated speeds or if the drive is noisy or vibrating at top speed, the non-preferred direction input is probably being used. Try reversing the motor so the input is in the other direction.

Output Speed is infinitely adjustable from 0 to 1/4th of the input speed. Speeds can be maintained or repeated with accuracy of 1% or less of maximum speed in the upper 90% of the range providing output load and input speed are constant.

Zero-Max Drives

Models vary in their ability to give absolute zero under light loads. All models go to zero output speed under full rated load.Output Torque ratings listed for various models are constant throughout the speed range and assume an input speed of 1800 RPM. The drives are designed for continuous duty running at one speed, a variety of speeds or continuous speed cycling. Additional output torque may be gained by lowering input speed. In general, the torque rating of all models may be increased 25% if the input speed is 900 RPM or lower.

Temperature

A rise of 40° C above ambient may be expected in the drive assuming input speed of 1800 RPM. This temperature will generate surface heat too hot for continued skin contact. This does not indicate a malfunction nor does it affect the performance of the drive. The drives are built to withstand high operating temperatures but they should never exceed 90° C.

Model	Overhung Load Pounds*		Thrust Load Pounds
	Output	Input	
E & JK	20	12	25
Y	40	30	75
QX	50	40	100
ZX	400	100	400
W	400	–	500

*Note: At mid-point of Input and Output Shafts

Control Linearity

Movement of the Zero-Max speed control lever or rotation of the screw control produces a change in output speed that is non-linear. A typical speed-control curve of a Zero-Max Drive under full rated load is shown in the chart below.

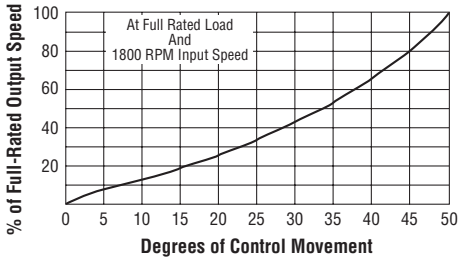

1. **Start By Determining The Torque Required To Start And Run Your Machine.** This may be the most important step in selecting the best drive model for your application. All Zero-Max Drives are rated for constant torque and variable horsepower throughout the speed range. Be sure to consider the type of machine and apply the proper service factor.

2. **Determine Speed Range Required For Your Machine Processes.** The Zero-Max Drive speed range of 0-400 RPM is given assuming an input speed of 1800 RPM and full load on the output shaft. The selection of input speed and direction of input will have an effect on the final output speed. Lower input speeds reduce the speed range proportionately.

   Running the input in the non-preferred direction substantially increases the speed range but may result in higher operating temperature. For best results, run the Zero-Max in the preferred direction and match the speed range to your machine requirement. Take as much reduction as possible, from the output shaft to the load, to provide adequate torque and to maximize accuracy of speed control.

3. **Determine Output Shaft Rotation.** This is done by looking directly at the end of the output shaft. Model numbers ending in "1" are CCW output, "2" are CW output and "3" are reversible. Use of the Zero-Max right angle gearhead does not change the direction of rotation of the final output shaft.

4. **Select The Proper Method Of Providing Input Speed To The Zero-Max Drive.** If the Zero-Max Drive is being used as a secondary drive unit, input is best provided by a timing belt drive. Other common methods include shaft couplings, chain and sprocket drive, V-belt, and flat belt drives which are less desirable because of the potential for excessive overhung loading on the shaft.

   In any case, care should be taken to mount pulleys, sprockets etc. as close to the Zero-Max Drive case as possible to minimize overhung loads on the shafts. If a Zero-Max motor is to be used, select the standard motor from the chart on page 12.

5. **Determine The Type Of Control Best Suited To Your Application.** Lever control is supplied as standard with all models of Zero-Max Drives. Other controls are available as discussed on page 3 and 4. The lever control is best suited for applications requiring rapid and frequent speed changes. The screw control is best suited for precise settings and speed repeating.

Series	Shaft Options Available	Output Torque		Recommended Input HP
E	1, 2, 3, 41, 42	12 In-Lbs	1.4 Nm	1/4 HP
JK	1, 2, 3, 41, 42	25 In-Lbs	2.8 Nm	1/3 HP
Y	1, 2, 41, 42	60 In-Lbs	6.8 Nm	1/2 HP
QX	1, 2, 41, 42	100 In-Lbs	11.3 Nm	3/4 HP
ZX	1, 2, 41, 42	200 In-Lbs	22.6 Nm	1 1/2 HP

Type	*Note: Shaft rotations are always referenced by viewing the end of that shaft*	Output Rotation	Preferred Input Rotation
E1, JK1, Y1, QX1, ZX1	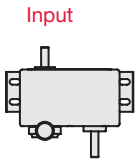	CCW	CW
E2, JK2, Y2, QX2, ZX2	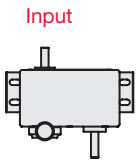	CW	CCW
E3, JK3	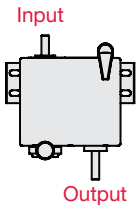	BOTH	CCW
E41, JK41, Y41, QX41, ZX41	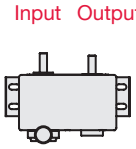	CCW	CCW
E42, JK42, Y42, QX42, ZX42	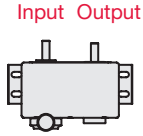	CW	CW
E1-W_ , JK1-W_	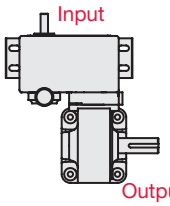	CCW	CW
E2-W_ , JK2-W_	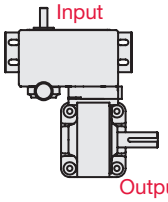	CW	CCW

Service Factors		
Type of Load	**Type of Duty**	
Uniform	8 to 10 hrs./day 1.0	24 hrs./day 1.5
Moderate Shock	1.5	2.0
Heavy Shock	2.0	3.0
Reversing Service	2.0	3.0

Types of Applications	Running Torque Multiplier
General machines with ball or roller bearings	1.2–1.3
General machines with sleeve bearings	1.3–1.6
Conveyors and machines with excessive sliding friction	1.6–2.5
Machines that have “high” load spots in their cycle like printing, punch presses and machines with cams /crank-operation.	2.5–6.0

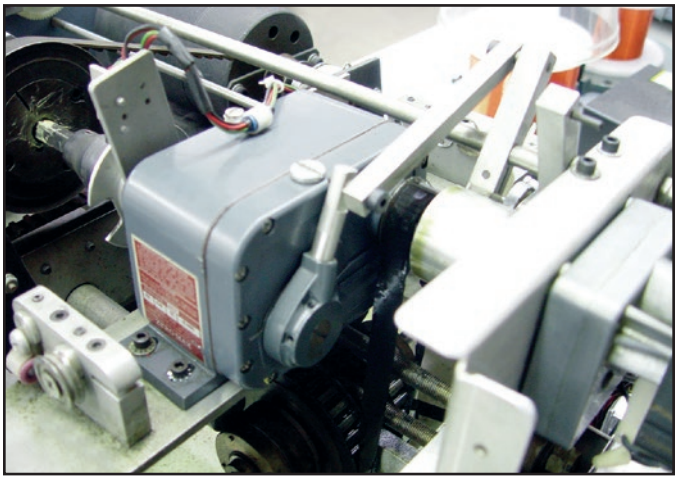

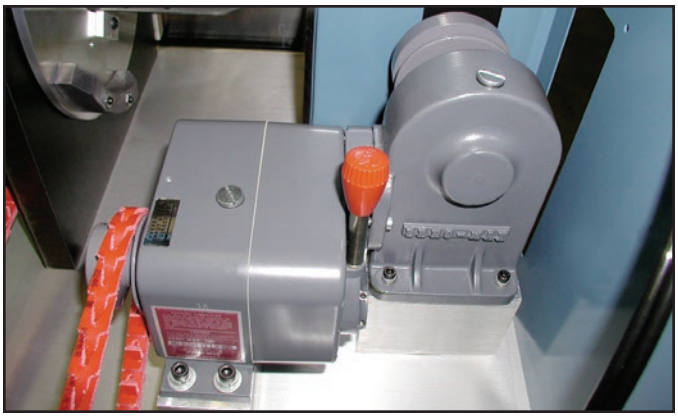

Standard Zero-Max Drives -- Order By Complete Model Number.

Torque Rating (In. Lbs.)	Speed Range w/ 1800 RPM input	Shaft Arrangement	Model Number - without Motor Output Shaft Rotation			Net Wt. Lbs.	Shaft Arrangement	Model Number - with Motor or C-Flange Adapter Output Shaft Rotation			Net Wt. Lbs.
			CCW	CW	Reverse			CCW	CW	Reverse	
12	0-400	A	E1	E2	-	4	D	E1-M3	E2-M3	-	18
	400-0-400	A	-	-	E3	5	D	-	-	E3-M3	19
	0-400	B	E41	E42	-	4	-	-	-	-	-
25	0-400	A	JK1	JK2	-	6	D	JK1-M3	JK2-M3	-	20
	400-0-400	A	-	-	JK3	6	D	-	-	JK3-M3	20
	0-400	B	JK41	JK42	-	6	-	-	-	-	-
35	0-100	C	E1-W1	E2-W1	-	9	E	E1-W1-M3	E2-W1-M3	-	23
	100-0-100	C	-	-	E3-W1	10	E	-	-	E3-W1-M3	24
60	0-400	A	Y1	Y2	-	10	F	Y1-CFY	Y2-CFY	-	16
	0-400	B	Y41	Y42	-	10	-	-	-	-	-
75	0-100	C	JK1-W1	JK2-W1	-	11	E	JK1-W1-M3	JK2-W1-M3	-	25
	10-0-100	C	-	-	JK3-W1	11	E	-	-	JK3-W1-M3	25
90	0-40	C	E1-W2	E2-W2	-	9	E	E1-W2-M3	E2-W2-M3	-	23
	40-0-40	C	-	-	E3-W2	10	E	-	-	E3-W2-M3	24
100	0-400	A	QX1	QX2	-	21	F	QX1-CFQ	QX2-CFQ	-	26
	0-400	B	QX41	QX42	-	21	-	-	-	-	-
155	0-20	C	E1-W3	E2-W3	-	9	E	E1-W1-M3	E2-W3-M3	-	23
	20-0-20	C	-	-	E3-W3	10	E	-	-	E3-W3-M3	24
190	0-40	C	JK1-W2	JK2-W2	-	11	E	JK1-W2-M3	JK2-W2-M3	-	25
	40-0-40	C	-	-	JK3-W2	11	E	-	-	JK3-W2-M3	25
200	0-400	A	ZX1	ZX2	-	32	F	ZX1-CFZ	ZX2-CFZ	-	37
	0-400	B	ZX41	ZX42	-	32	-	-	-	-	-
240	0-10	C	E1-W4	E2-W4	-	9	E	E1-W4-M3	E2-W4-M3	-	23
	10-0-10	C	-	-	E3-W4	10	E	-	-	E3-W4-M3	24
300	0-20	C	JK1-W3	JK2-W3	-	11	E	JK1-W3-M3	JK2-W3-M3	-	25
	20-0-20	C	-	-	JK3-W3	11	E	-	-	JK-W3-M3	25
300	0-10	C	JK1-W4	JK2-W4	-	11	E	JK1-W4-M3	JK2-W4-M3	-	25
	10-0-10	C	-	-	JK3-W4	11	E	-	-	JK3-W4-M3	25

Standard Shaft Arrangements

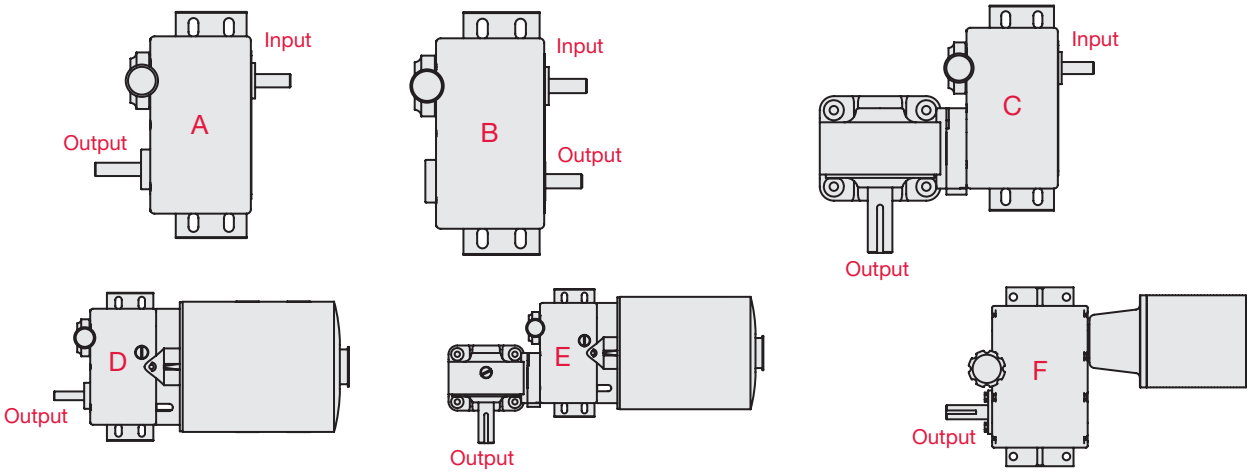

Standard Drives Models E, JK, Y, QX and ZX Dimensions

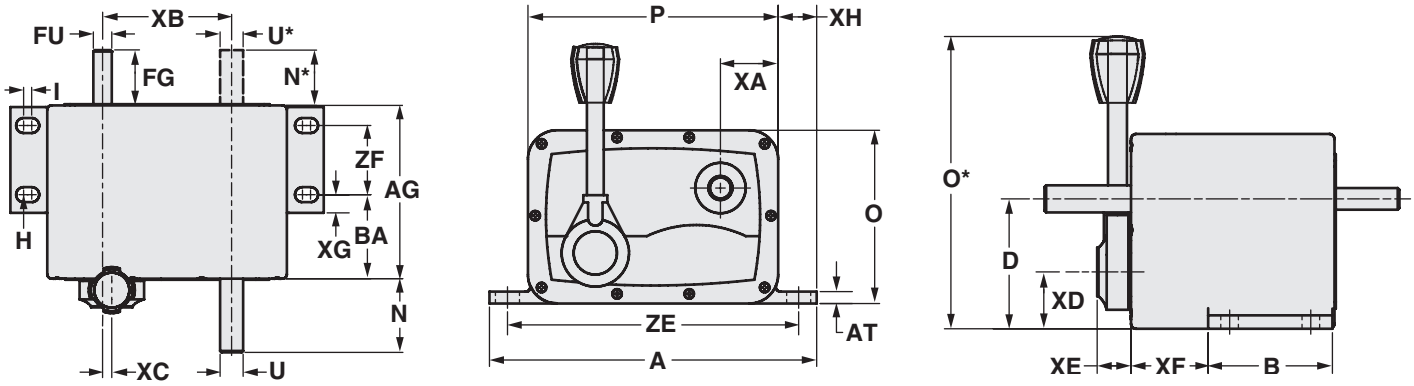

	E1&2	E 41&42	JK1&2	JK 41&42	Y1&2	Y 41&42	QX1&2	QX 41&42	ZX1&2	ZX 41&42
A	6.37	6.37	6.37	6.37	8.56	8.56	10.25	10.25	12.62	12.62
AG	2.84	2.84	3.98	3.98	4.73	4.73	6.81	6.81	6.75	6.75
AT	0.31	0.31	0.31	0.31	0.32	0.32	0.38	0.38	0.50	0.50
B	2.00	2.00	2.00	2.00	2.89	2.89	3.00	3.00	4.75	4.75
BA	1.22	1.22	2.34	2.34	2.31	2.31	2.41	2.41	1.50	1.50
D	2.25	2.25	2.25	2.25	3.04	3.04	3.50	3.50	4.50	4.50
FG	1.12	1.12	1.12	1.12	1.50	1.50	2.00	2.00	2.00	2.00
FU	0.375	0.375	0.375	0.375	0.500	0.500	0.625	0.625	0.875	0.875
H (slots)	0.28 dia.	0.28 dia.	0.28 dia.	0.28 dia.	0.40 dia.	0.40 dia.	0.40 dia.	0.40 dia.	0.53 dia.	0.53 dia.
I	0.25	0.25	0.25	0.25	0.22	0.22	0.10	0.10	0.0	0.0
N	1.56	---	1.56	---	2.00	---	3.00	---	3.25	---
N*	---	1.12	---	1.12	---	2.00	---	2.87	---	3.25
O	3.50	3.50	3.50	3.50	4.57	4.57	5.50	5.50	7.00	7.00
O*	5.25	5.25	5.25	5.25	6.75	6.75	8.25	8.25	10.00	10.00
P	5.00	5.00	5.00	5.00	6.56	6.56	8.00	8.00	10.00	10.00
U	0.375	---	0.375	---	0.625	---	0.750	---	1.00	---
U*	---	0.375	---	0.375	---	0.625	---	0.750	---	1.00
XA	1.25	1.25	1.25	1.25	1.53	1.53	2.00	2.00	2.50	2.50
XB	2.50	2.50	2.50	2.50	3.50	3.50	4.00	4.00	5.00	5.00
XC	0.00	0.00	0.00	0.00	0.25	0.25	0.45	0.45	1.94	1.94
XD	1.25	1.25	1.25	1.25	1.36	1.36	1.60	1.60	2.09	2.09
XE	0.56	0.56	0.56	0.56	0.75	0.75	0.91	0.91	1.00	1.00
XF	0.72	0.72	1.84	1.84	1.81	1.81	1.89	1.89	1.00	1.00
XG	0.50	0.50	0.50	0.50	0.50	0.50	0.50	0.50	0.50	0.50
XH	0.69	0.69	0.69	0.69	1.00	1.00	1.13	1.13	1.31	1.31
ZE	5.50	5.50	5.50	5.50	7.50	7.50	9.25	9.25	11.25	11.25
ZF	1.00	1.00	1.00	1.00	1.88	1.88	2.00	2.00	3.75	3.75

Reverse Drives Models E3 and JK3 Dimensions

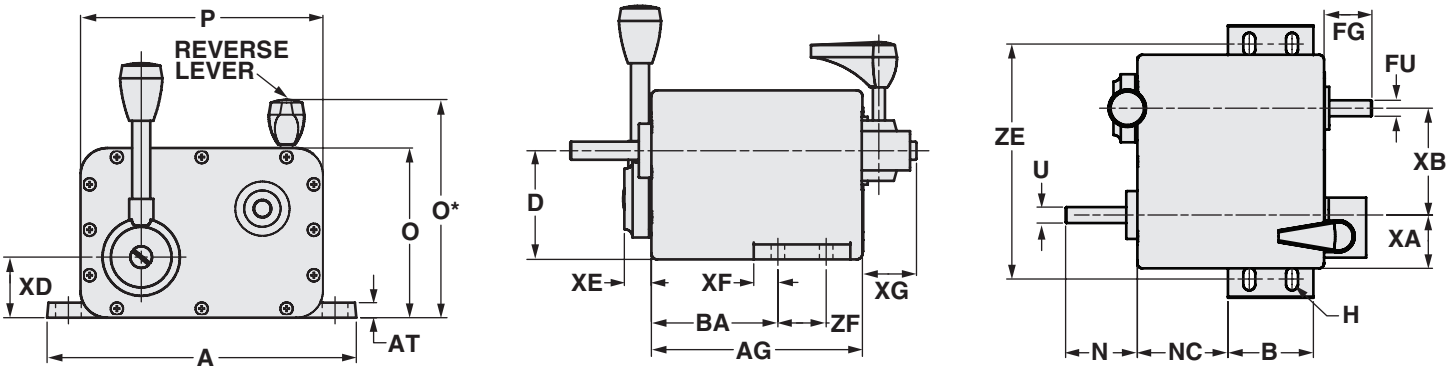

	A	B	D	H slots	N	O	O*	P	U	AG	AT	BA	FG	FU	XA	XB	NC	XD	XE	XF	XG	ZE	ZF
E3	6.37	2.00	2.25	0.28 dia.	1.56	3.50	4.50	5.00	0.375	3.23	0.31	1.59	1.12	0.375	1.25	2.50	1.00	1.25	0.56	0.50	1.00	5.50	1.00
JK3	6.37	2.00	2.25	0.28 dia.	1.68	3.50	4.50	5.00	0.375	4.37	0.31	2.71	1.12	0.375	1.25	2.50	2.12	1.25	0.56	0.50	1.00	5.50	1.00

Motorized Drives Models E and JK Dimensions

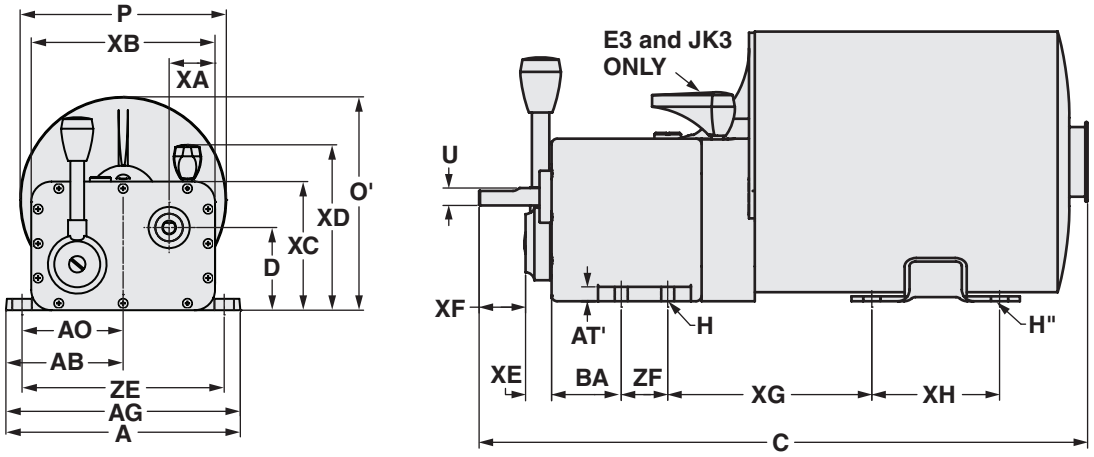

	A	D	H (slots)	H" (slots)*	P	U	AE	AO	AT	BA	XA	XB	XC	XD	XE	XF	XH	ZE	ZF
E1 & E2	6.37	2.25	0.28 dia.	0.34 dia.	5.62	0.375	3.18	2.75	0.31	1.22	1.25	5.00	3.50	4.50	0.56	1.00	2.75	5.50	1.00
E3	6.37	2.25	0.28 dia.	0.34 dia.	5.62	0.375	3.18	2.75	0.31	1.59	1.25	5.00	3.50	4.50	0.56	1.00	2.75	5.50	1.00
JK1 & JK2	6.37	2.25	0.28 dia.	0.34 dia.	5.62	0.375	3.18	2.75	0.31	2.34	1.25	5.00	3.50	4.50	0.56	1.00	2.75	5.50	1.00
JK3	6.37	2.25	0.28 dia.	0.34 dia.	5.62	0.375	3.18	2.75	0.31	2.71	1.25	5.00	3.50	4.50	0.56	1.00	2.75	5.50	1.00

*Motor slots are centered 4.25 apart.

Z.M. Motor	Used With	ENCL	Horse Power	Voltage	Hz	Phase	C DIMENSION w/ E1 & E2	C DIMENSION w/ E3	C DIMENSION w/ JK1 & JK2	C DIMENSION w/ JK3	XG	O'
M3	E or JK	DP	1/3	115	60	1	12.95	13.35	14.09	14.47	4.37	5.81
M9		DP	1/3	230	60	1	12.95	13.35	14.09	14.47	4.37	5.81
M42L**		DP	1/3	230/460	60	3	15.07	15.48	16.20	16.57	4.42	5.81
M5		TEFC	1/4	115	60	1	14.06	14.38	15.18	15.53	4.37	6.39
M45		TEFC	1/4	230/460	60	3	14.06	14.38	15.18	15.53	4.37	6.39

**M42L (long) has replaced M42 motor. Contact factory with questions.
Other motors are available, please contact the factory with your requirements.

Drives with C-Flange Adapters Models Y, QX and ZX Dimensions

Model Y

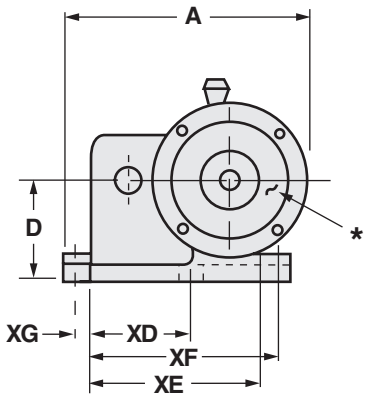

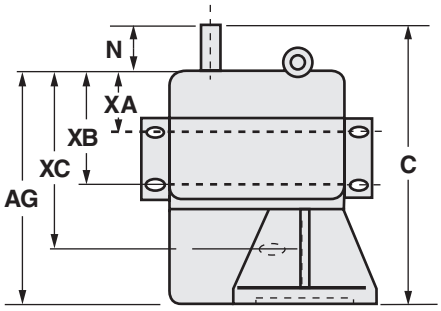

Model QX

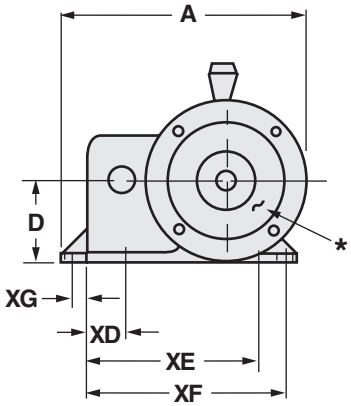

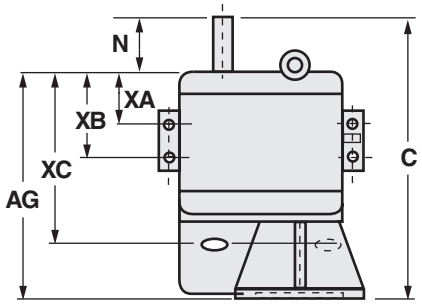

Model ZX

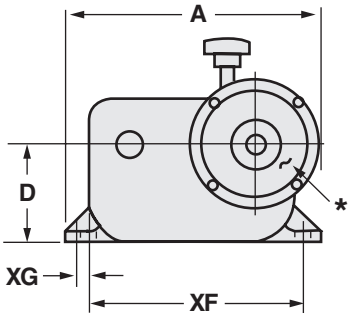

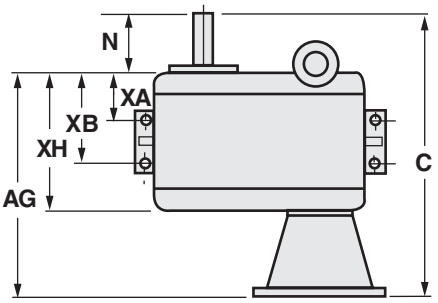

	A	C	D	N	AG	XA	XB	XC	XD	XE	XF	XG
Y	9.31	10.37	3.50	2.00	8.37	2.28	4.15	6.22	3.25	6.50	7.00	0.50
QX	10.37	13.97	3.50	3.00	11.10	2.39	4.41	8.37	1.63	7.12	8.63	0.63
ZX	12.12	14.12	4.50	3.25	10.88	1.50	5.25	-	-	-	10.62	0.62

*Accepts 56, 143T and 145T frame, C-face motor.

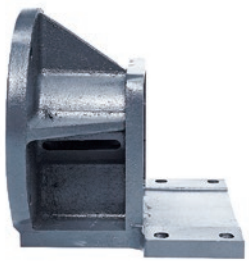

CFY



CFQ



CFZ

Standard Drives with Right Angle Gearhead Dimensions

	E1& E2	E3	JK1 & JK2	JK3
	Right Angle Gearheads (W)			
A	7.68	7.68	7.68	7.68
C'	8.53	8.90	9.65	10.02
D	3.81	3.81	3.81	3.81
H (slots)	0.28 dia.	0.28 dia.	0.28 dia.	0.28 dia.
H'	0.26 dia.	0.26 dia.	0.26 dia.	0.26 dia.
H" (slots)*	0.34 dia.	0.34 dia.	0.34 dia.	0.34 dia.
N	2.00	2.00	2.00	2.00
O	5.84	5.84	5.84	5.84
P	5.62	5.62	5.62	5.62
U	0.750	0.750	0.750	0.750
AB	3.18	3.18	3.18	3.18
AG	6.37	6.37	6.37	6.37
AO	2.75	2.75	2.75	2.75
AT	0.35	0.35	0.35	0.35
AT'	0.31	0.31	0.31	0.31
XA	0.06	0.06	0.06	0.06
XB	5.00	5.00	5.00	5.00
XC	2.38	2.38	2.38	2.38
XD	0.43	0.43	0.43	0.43
XE	1.43	1.43	1.43	1.43
XF	2.87	2.87	2.87	2.87
XH	2.43	2.84	3.59	3.93
XI	1.00	1.00	1.00	1.00
XK	2.75	2.75	2.75	2.75
XL	2.43	2.43	2.43	2.43
XN	-	4.50	-	4.50
ZE	5.50	5.50	5.50	5.50

*Motor slots are centered 4.25 apart

E and JK Drives with Right Angle Gearheads (W) Dimensions with Motor

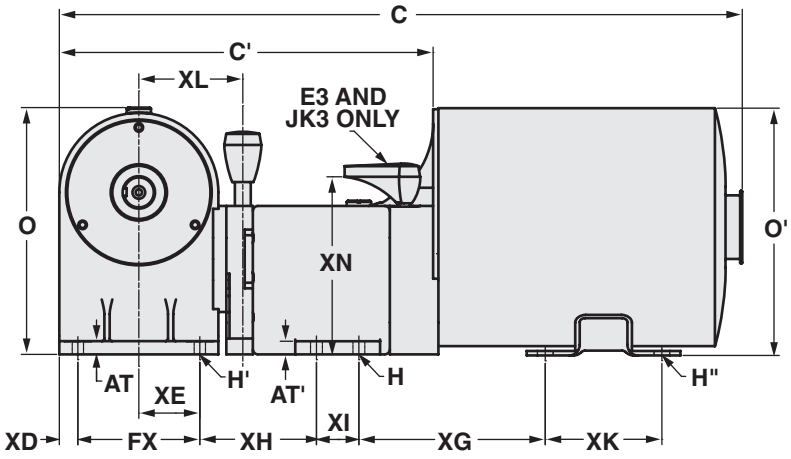

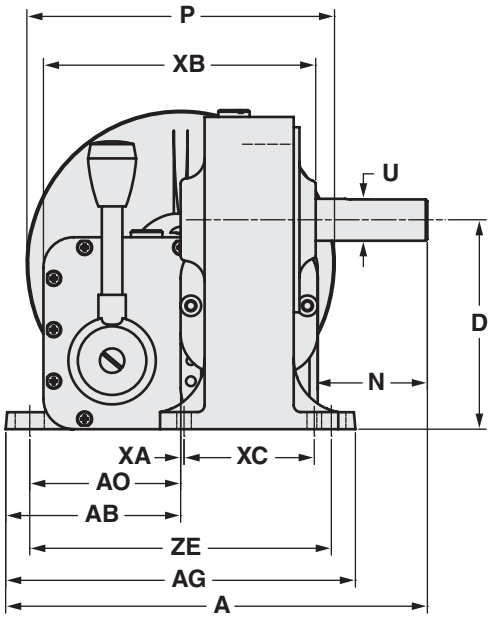

SHAFT AND KEYWAY DETAILS		
Model	**Output**	**Input**
E & JK	Flat 1/16" deep x 1-1/8"	Flat 1/16" deep x 3/4"
Y	Keyway 3/16" x 1-5/8"	Flat 1/16" deep x 1"
QX	Keyway 3/16" x 2-1/2"	Keyway 3/16" x 1-1/2"
ZX	Keyway 1/4" x 2-1/8"	Keyway 3/16" x 1-1/4"
W	Keyway 3/16" x 1-1/4"	Hollow Shaft

Specifications are subject to change. When dimensions are critical, detailed drawings should be obtained from the factory.

MOTORS*						
	Right Angle Gearheads (W)					
	C				XG	O'
Motor*	**w/E1 & E2**	**w/E3**	**w/JK1 & JK2**	**w/JK3**		
M3 & M9	15.95	16.33	17.06	17.45	4.37	5.81
M42L**	18.05	18.43	19.18	19.56	4.42	5.81
M5	16.75	17.25	18.00	18.38	4.37	6.39
M45	16.75	17.25	18.00	18.38	4.37	6.39

*See page 12 for motor data.

**M42L (long) has replaced M42 motor. Contact factory with questions.

Model	
Code	Output Torque
E	12 in-lbs
JK	25 in-lbs
Y	60 in-lbs
QX	100 in-lbs
ZX	200 in-lbs

Configuration		
Code	Output Rotation	Shaft Configuration
1	Counter Clockwise	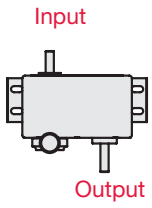
2	Clockwise	
3*	Both CCW and CW	
41	Counter Clockwise	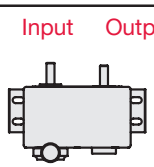
42	Clockwise	

*Reversing drives are available in sizes E and JK only.

Control Options	
Code	Output Torque
Omit	Standard Control Lever
SC	Screw Control
MD-LH	Microdial (Left Hand Installation)
MD-RH	Microdial (Right Hand Installation)

Note: Microdial controls not available on QX and ZX models as standard.

Right Angle Gear Reducer (Available for E and JK drives only)	
Code	Gear Ratio
Omit	None
W1	4 : 1
W2	10 : 1
W3	20 : 1
W4	40 : 1

Example:

- Required output torque is 20 in-lbs.
- Output shaft rotation is clockwise.
- Input and output shaft arrangement to be on same side of housing.
- Screw control option is desired.
- Gear reduction is not required.
- Integrated motor is not required

Model Code is JK42SC

Integrated Electric Motor (Available for E and JK drives only)				
Code	HP	Voltage	Phase	Enclosure
Omit	None			
M3	1/3	115	1	Drip Proof
M9	1/3	230	1	Drip Proof
M42L	1/3	230/460	3	Drip Proof
M5	1/4	115	1	Totally Enclosed Fan Cooled (TEFC)
M45	1/4	230/460	3	Totally Enclosed Fan Cooled (TEFC)

C-Face Adapters

Part Number	Description
CFY	Designed to mount a 56C frame motors to a Y drive
CFQ	Designed to mount a 56C frame motors to a QX drive
CFZ	Designed to mount a 56C frame motors to a ZX drive


MODEL CFY


MODEL CFQ


MODEL CFZ

Note: All kits include the shaft coupling.

PRECISE. RELIABLE. ROBUST. AVAILABLE.

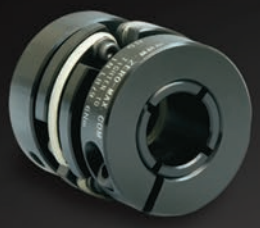

CD® Couplings

High-performance couplings that outperform and outlast bellows and steel disc designs. The unique design of the composite disc enables the CD Couplings to withstand punishing applications and deliver high precision performance. Fully Customizable.



Keyless Shaft Locking Devices

ETP® keyless connections and Posi-Lok® keyless bushings provide quick, easy and accurate assembly of mounted shaft components. Both inch and metric bore sizes are available from stock.



ServoClass® Couplings

Designed for demanding servomotor applications. Zero backlash, high torsional stiffness, high speed design. Features flexible metal discs for high misalignment capacity and keyless clamp-type mounting hubs.

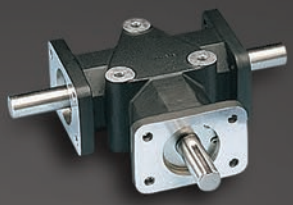

Crown Gear Drives

Available in 5-sizes, 3 configurations, and with 1:1 and 2:1 ratios. High quality AGMA class 10 spiral bevel gears. Stainless steel shafts and either black anodized or IP65-Rated nickel-plated aluminum housing.



Schmidt Offset Couplings

Designed to handle high amounts (up to 17") of parallel shaft offset with constant angular velocity. Standard models with torque capacities up to 459,000 in-lbs and extensive custom capabilities.



Adjustable Speed Drives

Easy to install and maintenance free. Zero-Max® Drives offer infinitely variable speeds from 0 rpm to 1/4 of input rpm. 5 models with torque ranges from 12 in-lbs to 200 in-lbs.

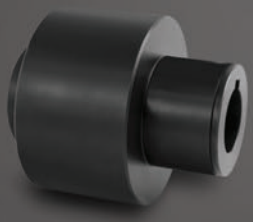

Overload Safety Couplings

Torque Tender® Couplings provide reliable overload protection in any mechanical power transmission system. Full selection of styles and sizes with set-point torque ranges from 3 to 3,000 in-lbs.



Roh'Lix® Linear Actuators

Simple conversion of rotary motion into precise linear motion. Available in five models and multiple configurations. Roh'Lix actuators have thrust ratings from 5 to 200 lbs. All models feature built-in overload protection.



Control-Flex Couplings

Zero backlash couplings designed for encoder and instrumentation type applications. Features high misalignment capacity, constant velocity, and an electrically isolated hub design.

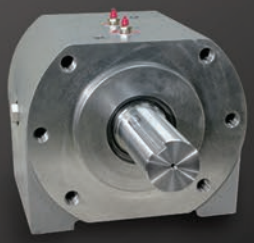

OHLA® Overhung Load Adaptors

Designed to protect hydraulic motors and pumps from radial/axial loads and to provide additional seal protection. 11 models available for mounts from SAE A to SAE F. Fully customizable.

Warranty. Zero-Max, Inc. the manufacturer, warrants that for a period of 12 months from date of shipment it will repair, or at its option, replace any new apparatus which proves defective in material or workmanship, or which does not conform to applicable drawings and specifications approved by the manufacturer. All repairs and replacements shall be F.O.B. factory. All claims must be made in writing to the manufacturer. ● In no event and under no circumstances shall manufacturer be liable for (a) damages in shipment; (b) failures or damages due to misuse, abuse, improper installation or abnormal conditions of temperature, dirt, water or corrosives; (c) failures due to operation, intentional or otherwise, above rated capacities, and (d) non-authorized expenses for removal, inspection, transportation, repair or rework. Nor shall manufacturer ever be liable for consequential and incidental damages, or in any amount greater than the purchase price of the apparatus. ● Zero Max, Inc. reserves the right to discontinue models or to change specifications at any time without notice. No discontinuance or change shall create any liability on the part of Zero-Max, Inc. in respect to its products in the hands of customers or products on order not incorporating such changes even though delivered after any such change. ● This warranty is in LIEU OF ALL OTHER WARRANTIES, EXPRESS OR IMPLIED, INCLUDING (BUT NOT LIMITED TO) ANY IMPLIED WARRANTIES OF MERCHANTABILITY OR FITNESS FOR A PARTICULAR PURPOSE. THE TERMS OF THIS WARRANTY CONSTITUTE ALL BUYER'S OR USER'S SOLE AND EXCLUSIVE REMEDY, AND ARE IN LIEU OF ANY RIGHT TO RECOVER FOR NEGLIGENCE, BREACH OF WARRANTY, STRICT TORT LIABILITY OR UPON ANY OTHER THEORY. Any legal proceedings arising out of the sale or use of this apparatus must be commenced within 18 months of the date of purchase. ● CAUTION: Rotating equipment must be guarded. Also refer to OSHA specifications and recommendations. ● Zero-Max®, CD®, ETP®, ServoClass®, Torq-Tender®, Posi-Lok®, Roh'Lix®, and OHLA® are registered trademarks of Zero-Max, Inc. In U.S.A.

©Zero-Max, Inc., All Rights Reserved
Printed in U.S.A., Rev2.04W

ZERO-MAX®

13200 Sixth Avenue North, Plymouth, Minnesota 55441-5509
Phone 800.533.1731 763.546.4300 FAX 763.546.8260

zero-max.com