REXNORD

PRODUCT CATALOG



REXNORD® KLEANTOP® BELTS

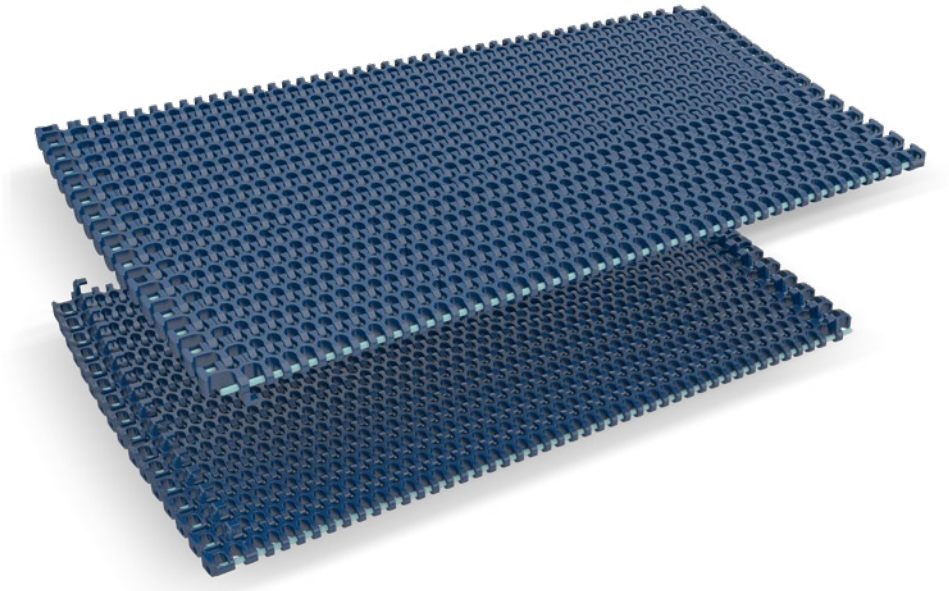

RegalRexnord™







Rexnord® KleanTop® Belts provide a plastic modular belting solution for applications requiring adherence to strict hygiene regulations, such as those found in the food industry. Available in assembled-to-width and molded-to-width configurations, Rexnord KleanTop Belts are engineered to satisfy a wide range of conveyor applications for various product sizes. Products within the KleanTop line satisfy a wide range of needs in hygienic applications including temperature and abrasion resistance, heavy load carrying capacity and ease in cleaning.

Rexnord KleanTop Belts

Conveniently Accessible Online Information



We realize the success of your business depends on up-to-date product information, superior technical support and customer service. Visit our website, *regalrexnord.com,* for additional product information, useful tools, and technical support options to help your business succeed.

Disclaimers

Rexnord® and KleanTop® are trademarks of Regal Rexnord™ Corporation.

Friction values are derived from internal lab tests which can show differences compared to values in the field due to the conveyor design, conveyor robustness (how well the conveyors are built), temperature, humidity, speed, contamination, length chain has been in service, conveyed product material, design of conveyed product, recycled conveyed product vs new, cleaning procedure, etc.

Actual chain color can slightly vary from belt to belt, and within the same belt series itself. These variations are normal in the manufacturing of plastic components and are only cosmetic in nature. They do not affect the integrity or performance of the product.

Dimensions are subject to change.

Certified dimensions of ordered products are furnished upon request.

The Food and Drug Administration (FDA) accepts certain materials for direct food contact. FDA-approved material is compliant to FDA 21 CFR § 177.

The contents of this catalog may not be reproduced in whole or in part without consent of the copyright owner.

Regal Rexnord is continually investigating methods of improving products and introducing new technologies, and therefore reserves the right to modify data and features shown in this catalog at any time.

For updated information, please visit our web site at *regalrexnord.com*

Some or all of the products in this catalog may be protected by the following patents:

3622018, 3701413, 3706200, 3759579, 3773391, 3782527, 3802033, 3804230, 3804232, 3826352, 3854414, 3854574, 3893564, 3902590, 3964800, 3976177, 3994405, 4008798, 4008800, 4018322, 4019627, 4033451, 4096943, 4436200, 4438838, 4441605, 4464151, 4476974, 4586601, 4629063, 4643291, 4682687, 4711605, 4765454, 4805764, 4809846, 4821869, 4823939, 4840269, 4858751, 4858753, 4865183, 4880107, 4893464, 4893709, 4909380, 4958726, 5020659, 5088597, 5096050, 5096053, 5125504, 5131960, 5158505, 5176247, 5186390, 5199197, 5199551, 5215185, 5219065, 5249415, 5253749, 5330045, 5332158, 5335768, 5337886, 5402880, 5429226, 5573106, 5597062, 5634550, 5662211, 5678682, 5678683, 5759304, 5779027, 5816390, 5860511, 5896980, 5960937, 6029802, 6036001, 6079544, 6086495, 6161685, 6164435, 6164439, 6173832, 6177113, 6196375, 6247582, 6247583, 6250459, 6360881, 6367619, 6428436, 6758327, 6840371, 6932211, 6978885, 6945388, 6997309, 7097032, 7132167, 7168557, 7246700, 7293644, 7377380, D263211, D263292, D269217, D270201, D270202, D282907, D284640, D286136, D289496, D289497, D289606, D289607, D289608, D289734, D299424, D299425, D332213, EP0286173, EP0509605, EP0700843 EP5199551, 6932211 B2 and RE38543.

Table of Contents

KleanTop® Belt Photo Index 5

KleanTop Belts 6

KleanTop Ordering Guidelines 6
390 Series 7
390 Series Compatible Sprockets 8
590 Series 9
590 Series Compatible Sprockets 11
1010 Series 12
1010 Series Compatible Sprockets 16
1010 Series Accessories 17
1090 Series 19
1090 Series Compatible Sprockets 21
1090 Series Accessories 22
1200 Series 23
1200 Series Compatible Sprockets 26
1600 Series 27
1600 Series Compatible Sprockets 30
2010 Series 31
2010 Series Compatible Sprockets 34
2010 Series Accessories 34
5960 Series 37
5960 Series Compatible Sprockets 38
5960 Series Accessories 39
5990 Series 40
5990 Series Compatible Sprockets 41
5990 Series Accessories 43
8500 Series 44
8500 Series Compatible Sprockets 45
8500 Series Accessories 47
Rexnord Belt Width Table (MTW vs Standard Vs Nonstandard) 48
KleanTop Sprocket and Shaftdrop Height Adjustment 49

Rexnord® KleanTop Materials 50

Material Index 50
High Temperature Material 51
Acetal Ultraviolet Resistant Material 52
Fryer Temperature Resistant Material 53
High Temperature Ultraviolet Resistant Material 54
Low Temperature Material 55
Cut & Abrasion Resistant Acetal 56

KleanTop® Belts by Series

Solid Top Belts

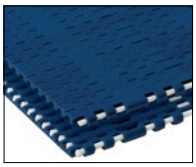
395

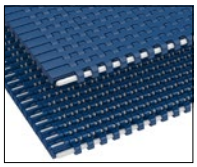
595

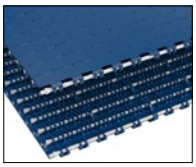
1015

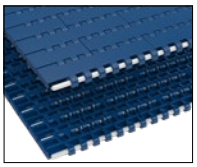
1095

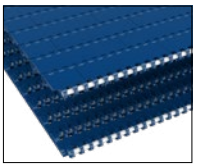
2015

Flush Grid Belts

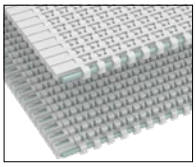
596

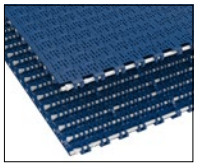
1016

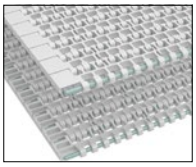
1096


2016

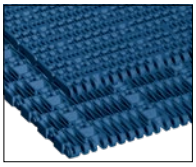
5966


5998 Heavy Duty

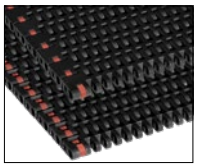
8506

Side-flexing Belts

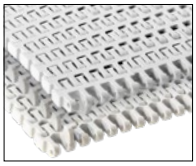
1255


1255 SuperGrip

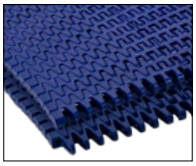
1275

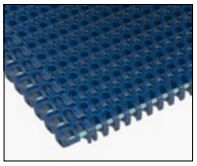
1654

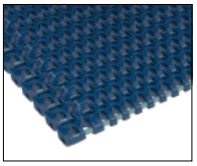
1655

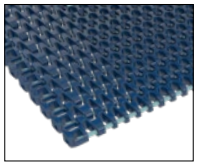
1675

NubTop Belts

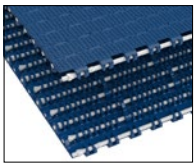
1011

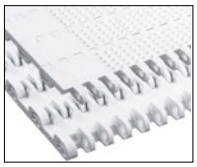
2011

Perforated NubTop Belts

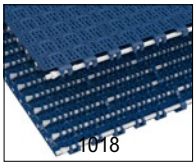
1018

KleanTop® Ordering Guidelines

Description	Format	Example 1	Example 2	Example 3	Explanation
Belts					
Material Prefix	…	WHT	BHT	SMB	Belt material from belt page
Belt Description	…	8505	1505DTS	2015	Belt description from belt page
Width Description	- …	-6	-4.5	-21.33IN	Belt width from belt page
Flight Attachments					
Height	F…IN (MM)	-	-	DR3IN	Height of flight
Pitches Between Flights	T…P	-	-	T5P	1 = every row, 2 = every other row, etc
Side-Indent	N…IN (MM)	-	-	N2IN	Distance from edge of belt to side of flight
Sideguard Attachments					
Sideguard Height	ISR, S…IN (MM)	-	-	S2IN	Height of sideguard
Side-Indent	N…IN (MM)	-	-	N2IN	Distance from edge of belt to side of sideguard
Sprockets					
Sprocket Description	…	SSS8500	NS7700	N1500	Sprocket description
Number Of Actual Teeth	-…T	-25T	-21T	-7T	Actual number of teeth
Bore Diameter	…IN (…MM)	1-1/2IN	2-1/2IN	3/4IN	Bore diameter
No. of Keyways	…KW	1KW	-	-	Number of keyways required
No. of Setscrews	…SS	1SS	-	-	Number of setscrews required
Bore Type	…Bore	Idler	Square	Shaft-Ready	Bore type

When ordering, please use the guidelines outlined in the chart above to ensure accuracy.

Belt Guideline Examples:

WHT595-12IN is 595 belt in WHT; 12 inches wide.

SMB1095-18IN is 1095 belt in SMB; 18 inches wide.

WLT2015-24-F4IN T6P N2IN is 2015 belt in WLT; 24 inches wide with 4 inch flight every 6 pitches indented 2 inches.

Sprocket Guideline Examples:

KU590-36T 1-1/5IN S is a one piece Thermoplastic 590 Series machined sprocket with 36 teeth and 1.5 inch square bore.

KU1090-18T 1-1/5IN 1KW1SS is a one piece Thermoplastic 1090 Series machined sprocket with 18 teeth and 1.5 inch round bore with keyway and setscrew.

KUS1090-18T 2-1/5IN S is a split Thermoplastic 590 Series machined sprocket with 36 teeth and 2.5 inch square bore.

Sprocket Round Bore Nomenclature:

Shaft-Ready — Tight fit on the shaft with a keyway and setscrew.

Plain Bore — Same tight fit bore as a shaft-ready bore, but without keyway and setscrew.

Idler Bore — Round bore with a clearance fit (no keyway or setscrew). Designed to spin freely on the shaft.

Rough Stock Bore — Wide tolerance bore used for work in process. Not for use on any shaft. Must be further machined for actual use.

Overbore — Round bore with a slightly loose fit on the shaft with keyway but no setscrew. Designed to move laterally on the shaft during setup and still transmit torque through the keyway as a drive sprocket in the actual application. Not recommended for axial float in thermal applications.

Material Prefix

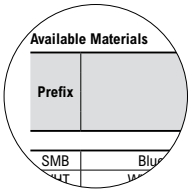

Belt Description

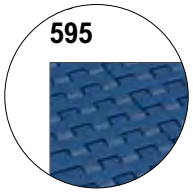

Width Description

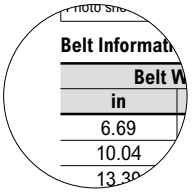

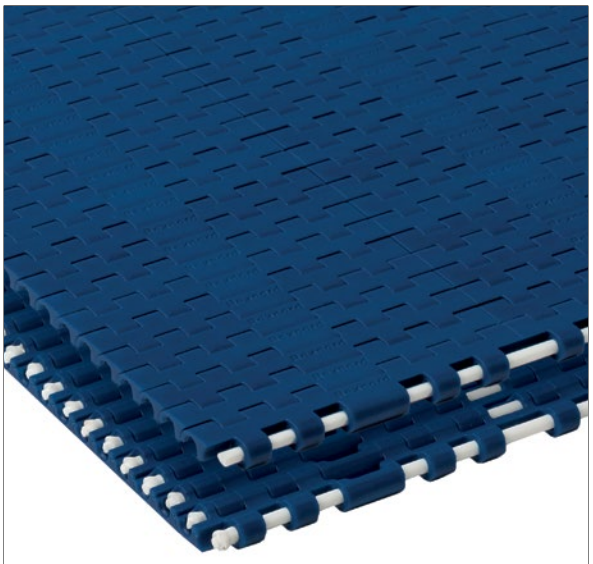

Photo shows 395 KleanTop® Belt molded in SMB material.

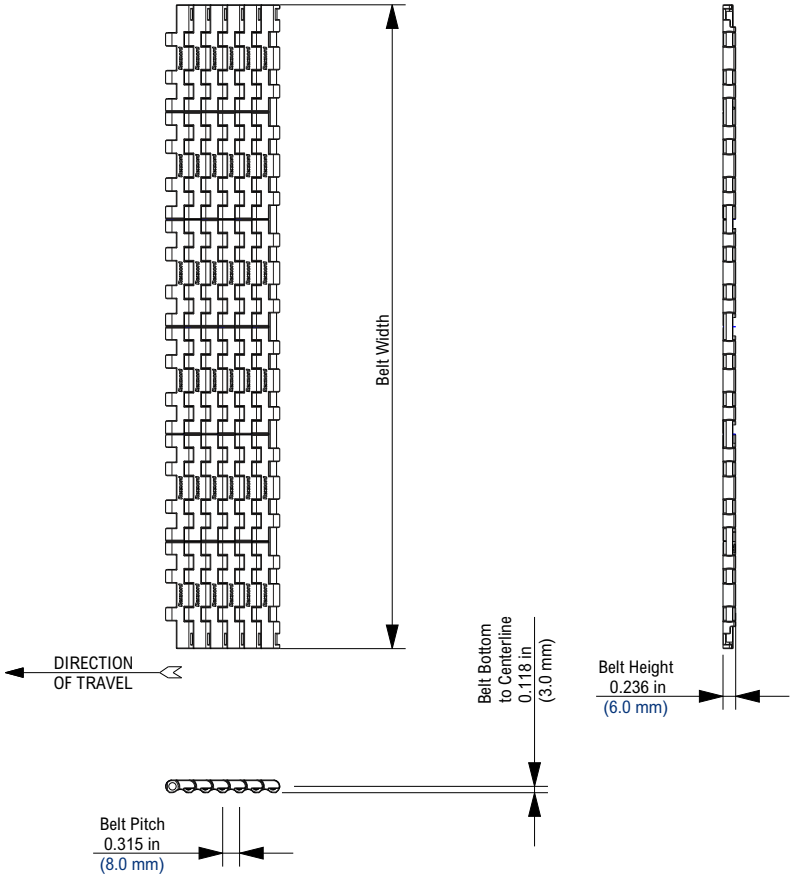

Belt Information

Belt Capacity	Number of Sprockets	
	per ft of width	per m of width
0% - 100%	6	18

Available Materials

Prefix	Belt Material	Standard Pin Material	Temperature						Belt Strength		Approximate Weight		FDA Approval
			Fahrenheit			Celsius							
			min	max		min	max						
				dry	wet		dry	wet	lbs/ft	N/m	lbs/ft²	kg/m²	
Standard Materials													
WSM	White Cut Resistant (POM)	Polyester	-40	180	150	-40	82	65	500	7,300	1.16	5.7	Yes
SMB	Blue Cut Resistant (POM)	Polyester	-40	180	150	-40	82	65	500	7,300	1.16	5.7	Yes

Additional Notes

For belt width information see KleanTop Belt Width Table on page 48.

Open area < 2%

Metric width version is available through special order with extended lead times.

Belt strength is listed at room temperature.

For additional material information, see material portfolio.

Contact Regal Rexnord™ Customer Service for specific product availability.

KU390 Thermoplastic Sprocket

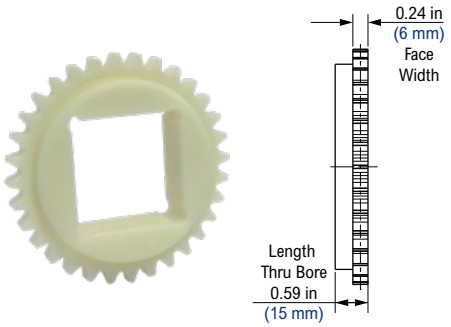

KU390 Thermoplastic Sprocket Information

Number of Teeth		Pitch Diameter		Outside Diameter		Bore Diameter (Shaft-Ready)								Bore Diameter (Idler)				Approximate Weight	
						Round				Square									
						in		mm		in		mm		in		mm			
actual	effect	in	mm	in	mm	min	max	min	max	min	max	min	max	min	max	min	max	lbs	kg
24T	24T	2.4	61	2.5	63	3/4	1	20	30	1	1	25	30	1	1	25	30	0.05	0.02
32T	32T	3.2	83	3.3	83.3	3/4	1 1/2	20	50	1	1 1/2	25	45	1	2	25	50	0.10	0.05
36T	36T	3.6	92	3.7	93.2	3/4	2	20	60	1	2	25	55	1	2	25	60	0.15	0.07

390 Series Minimum Nose-over Bar Diameter

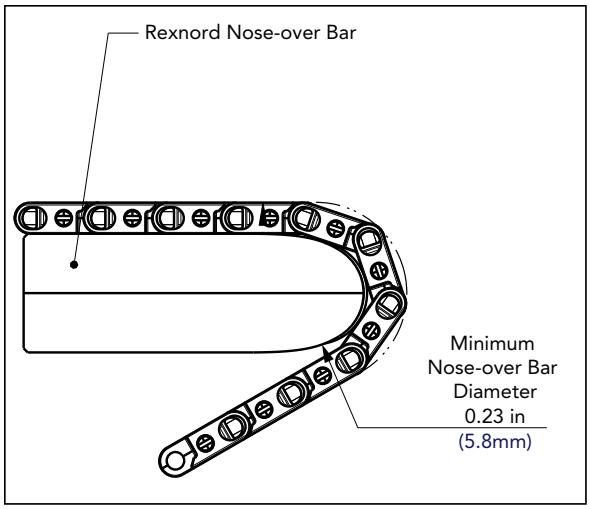

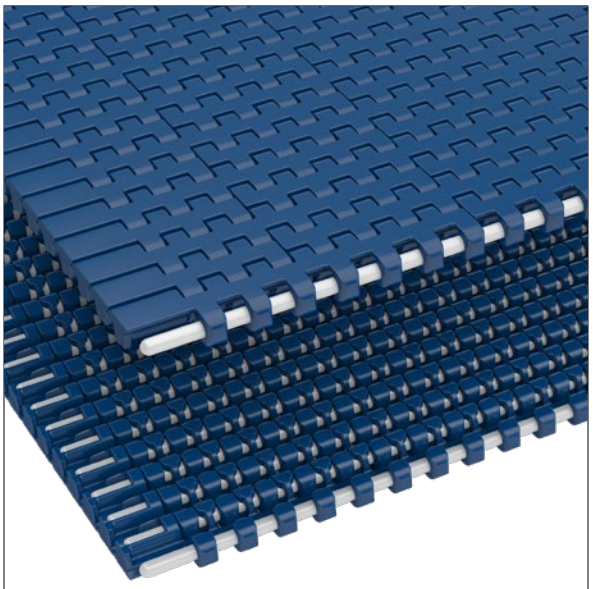

Photo shows 595 KleanTop® Belt molded in Blue Cut Resistant (SMB).

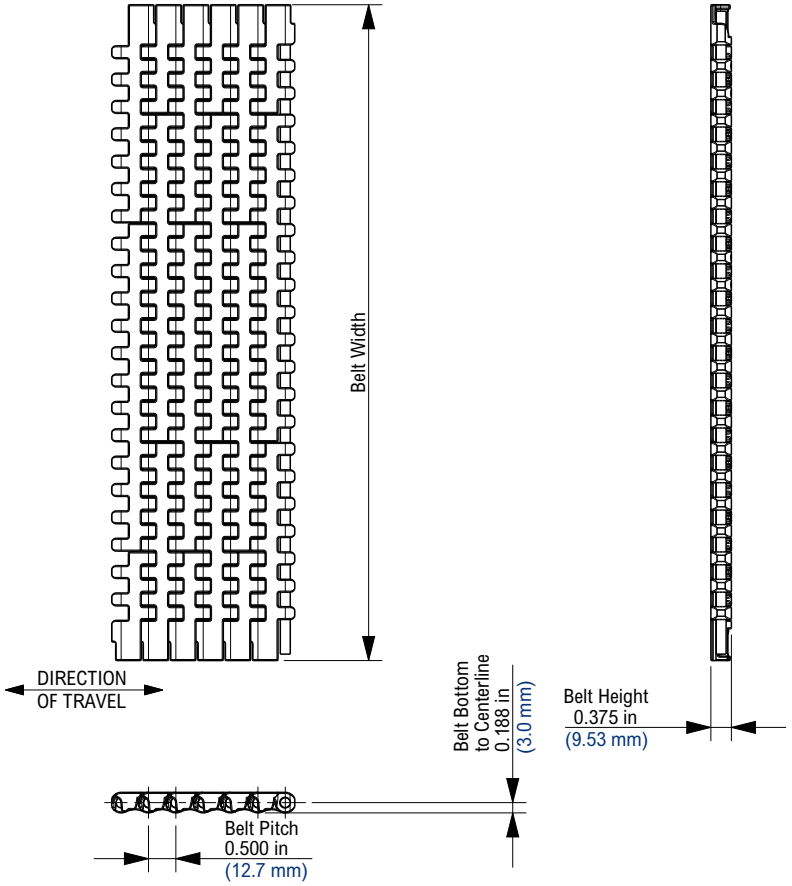

Belt Information

Belt Capacity	Number of Sprockets	
	per ft of width	per m of width
0% - 50%	2	6
50% - 100%	4	12

Available Materials

Prefix	Belt Material	Standard Pin Material	Temperature						Belt Strength		Approximate Weight		FDA Approval
			Fahrenheit			Celsius							
			min	max		min	max						
				dry	wet		dry	wet	lbs/ft	N/m	lbs/ft²	kg/m²	
Standard Materials													
SMB	Blue Cut Resistant (POM)	Polyester	-40	180	150	-40	82	66	1,100	16,048	1.59	7.76	Yes
WHT	White High Temperature (PP)	Polyester	40	220	212	4	104	100	700	10,213	1.02	4.98	Yes
BHT	Blue High Temperature (PP)	Polyester	40	220	212	4	104	100	700	10,213	1.02	4.98	Yes

Additional Notes

For belt width information see KleanTop Belt Width Table on page 48.

Open area < 3%

Belt strength is listed at room temperature.

For additional material information, see material portfolio.

Contact Regal Rexnord™ Customer Service for specific product availability.

596

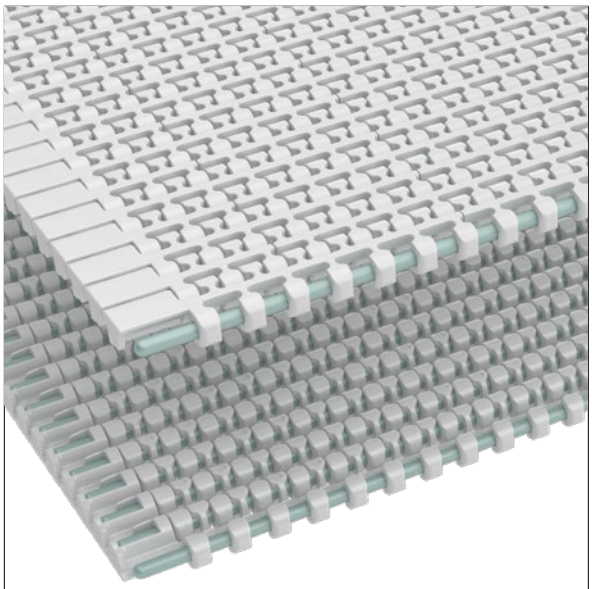

Photo shows 596 KleanTop® Belt molded in White Hight Temperature (WHT) material.

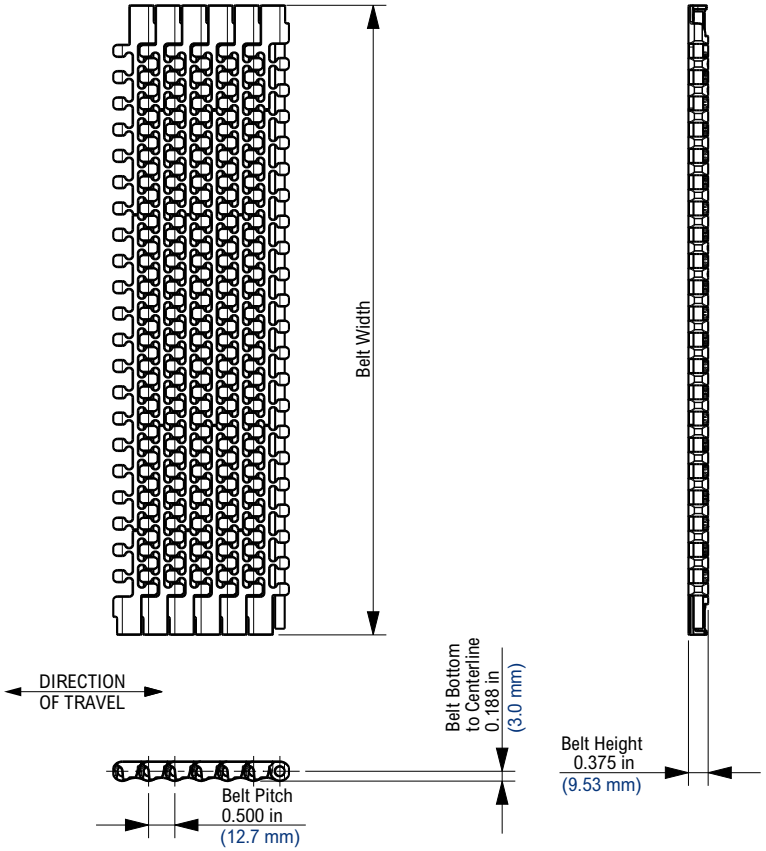

Belt Information

Belt Capacity	Number of Sprockets	
	per ft of width	per m of width
0% - 50%	2	6
50% - 100%	4	12

Available Materials

Prefix	Belt Material	Standard Pin Material	Temperature						Belt Strength		Approximate Weight		FDA Approval
			Fahrenheit			Celsius							
			min	max		min	max						
				dry	wet		dry	wet	lbs/ft	N/m	lbs/ft²	kg/m²	
Standard Materials													
SMB	Blue Cut Resistant (POM)	Polyester	-40	180	150	-40	82	66	900	13,130	1.48	7.23	Yes
WHT	White High Temperature (PP)	Polyester	40	220	212	4	104	100	500	7,295	0.95	4.64	Yes
BHT	Blue High Temperature (PP)	Polyester	40	220	212	4	104	100	500	7,295	0.95	4.64	Yes

Additional Notes

For belt width information see KleanTop Belt Width Table on page 48.

Open area = 25%

Belt strength is listed at room temperature.

For additional material information, see material portfolio.

Contact Regal Rexnord™ Customer Service for specific product availability.

KU590 Thermoplastic Sprocket

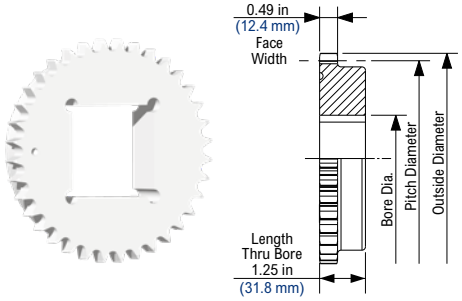

KUS590 Thermoplastic Split Sprocket

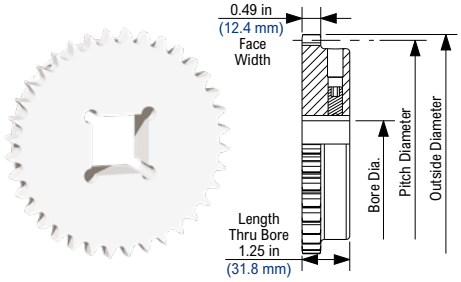

KU590 Thermoplastic Sprocket Information

Number of Teeth		Pitch Diameter		Outside Diameter		Bore Diameter (Shaft-Ready)								Bore Diameter (Idler)				Approximate Weight	
						Round				Square									
		in		mm		in		mm		in		mm		in		mm			
actual	effect	in	mm	in	mm	min	max	min	max	min	max	min	max	min	max	min	max	lbs	kg
19T	19T	3.0	77.2	3.0	76.7	1	1 7/16	25	35	1	1 1/2	25	38	1	1 3/4	25	45	0.18	0.08
24T	24T	3.8	97.3	3.8	97.2	1	1 3/4	25	45	1	1 5/8	25	40	1	2	25	50	0.34	0.16
28T	28T	4.5	113.4	4.5	113.9	1	2 1/4	25	55	1	2 1/4	25	55	1	3	25	76	0.54	0.24
36T	36T	5.7	145.7	5.8	146.4	1	3	25	75	1	3	25	75	1	4	25	102	1.00	0.45

KUS590 Thermoplastic Split Sprocket Information

Number of Teeth		Pitch Diameter		Outside Diameter		Bore Diameter (Shaft-Ready)								Bore Diameter (Round)				Approximate Weight	
						Round				Square									
		in		mm		in		mm		in		mm		in		mm			
actual	effect	in	mm	in	mm	min	max	min	max	min	max	min	max	min	max	min	max	lbs	kg
36T	36T	5.7	145.7	5.8	146.4	1	2 3/4	25	70	1	2 1/2	25	60	1	2 3/4	25	70	1.05	0.47

590 Series Minimum Nose-over Bar Diameter

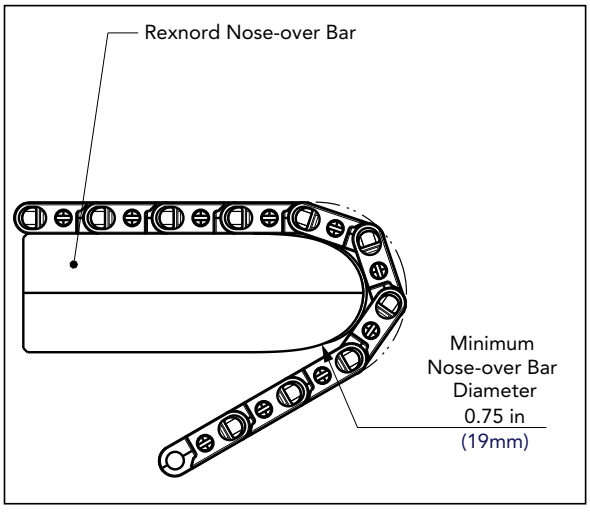

1011

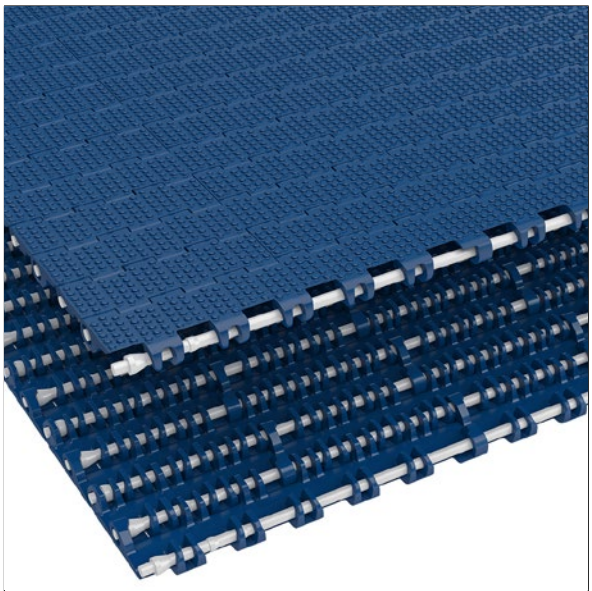

Photo shows 1011 KleanTop® Belt molded in Blue High Temperature (BHT) material.

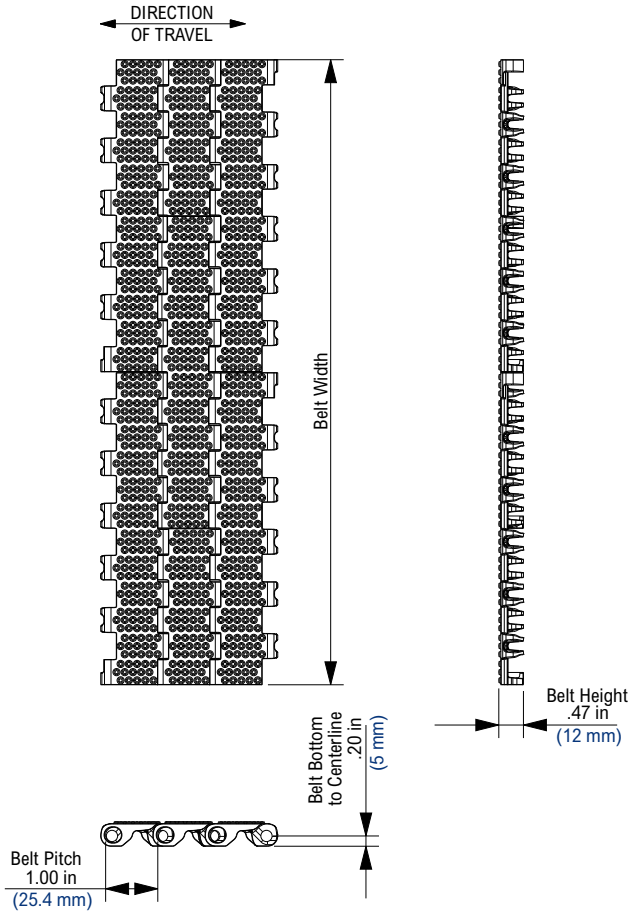

Belt Information

Belt Capacity	Number of Sprockets	
	per ft of width	per m of width
0% - 50%	3	6
50% - 100%	6	12

Available Materials

Prefix	Belt Material	Standard Pin Material	Temperature						Belt Strength		Approximate Weight		FDA Approval
			Fahrenheit			Celsius							
			min	max		min	max						
				dry	wet		dry	wet	lbs/ft	N/m	lbs/ft²	kg/m²	
Standard Materials													
WHT	White High Temperature (PP)	Polyester	40	220	212	4	104	100	400	6000	0.90	4.39	Yes
BHT	Blue High Temperature (PP)	Polyester	40	220	212	4	104	100	400	6000	0.90	4.39	Yes
WLT	White Low Temperature (PE)	Polyester	-100	80	80	-73	27	27	350	5000	0.98	4.78	Yes
BLT	Blue Low Temperature (PE)	Polyester	-100	80	80	-73	27	27	350	5000	0.98	4.78	Yes

Additional Notes

For belt width information see KleanTop Belt Width Table on page 48.

Open area < 2%

Minimum available width is 2 in (50.8 mm).

Belt strength is listed at room temperature.

For additional material information, see material portfolio.

Contact Regal Rexnord™ Customer Service for specific product availability.

1015

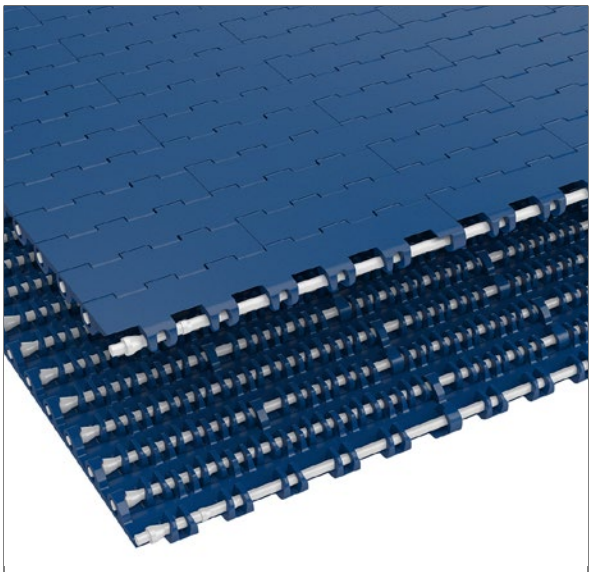

Photo shows 1015 KleanTop® Belt molded in Blue High Temperature (BHT) material.

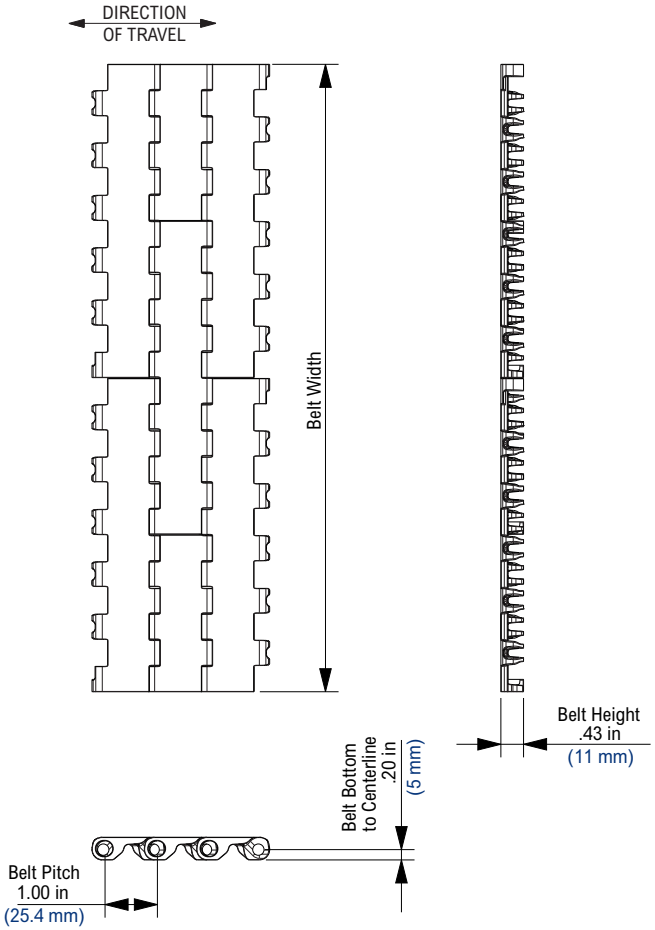

Belt Information

Belt Capacity	Number of Sprockets	
	per ft of width	per m of width
0% - 50%	3	6
50% - 100%	6	12

Available Materials

Prefix	Belt Material	Standard Pin Material	Temperature						Belt Strength		Approximate Weight		FDA Approval
			Fahrenheit			Celsius							
			min	max		min	max						
				dry	wet		dry	wet	lbs/ft	N/m	lbs/ft²	kg/m²	
Standard Materials													
WHT	White High Temperature (PP)	Polyester	40	220	212	4	104	100	400	6000	0.90	4.39	Yes
BHT	Blue High Temperature (PP)	Polyester	40	220	212	4	104	100	400	6000	0.90	4.39	Yes
WLT	White Low Temperature (PE)	Polyester	-100	80	80	-73	27	27	350	5000	0.98	4.78	Yes
BLT	Blue Low Temperature (PE)	Polyester	-100	80	80	-73	27	27	350	5000	0.98	4.78	Yes
WSM	White Cut Resistant (POM)	Polyester	-40	180	150	-40	82	66	800	12000	1.44	7.03	Yes

Additional Notes

For belt width information see KleanTop Belt Width Table on page 48.

Open area < 2%

Minimum available width is 2 in (50.8 mm).

Belt strength is listed at room temperature.

For additional material information, see material portfolio.

Contact Regal Rexnord™ Customer Service for specific product availability.

1016

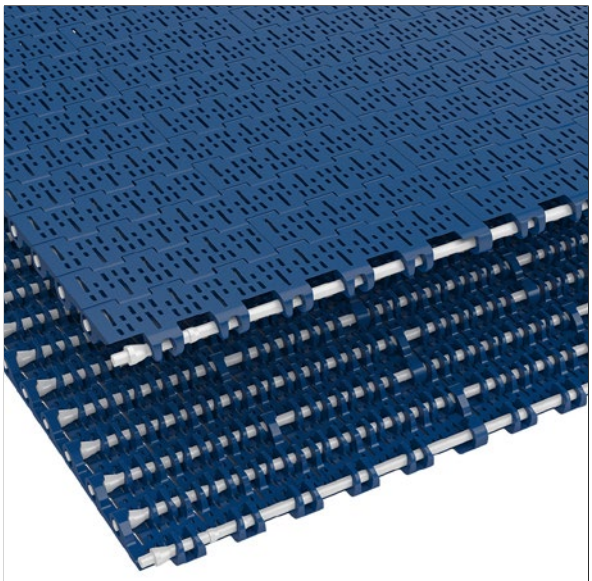

Photo shows 1016 KleanTop® Belt molded in Blue High Temperature (BHT) material.

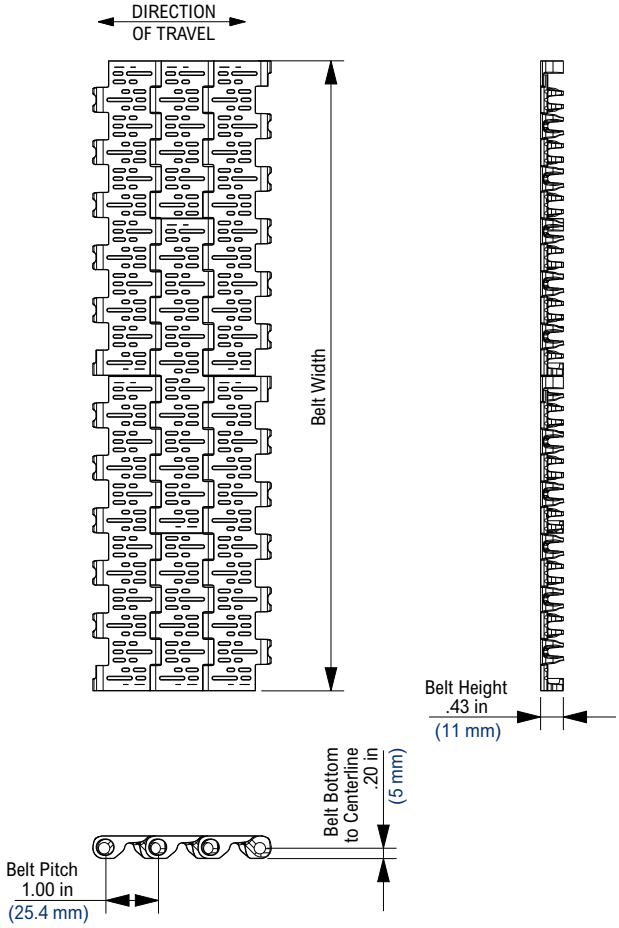

Belt Information

Belt Capacity	Number of Sprockets	
	per ft of width	per m of width
0% - 50%	3	6
50% - 100%	6	12

Available Materials

Prefix	Belt Material	Standard Pin Material	Temperature						Belt Strength		Approximate Weight		FDA Approval
			Fahrenheit			Celsius							
			min	max		min	max						
				dry	wet		dry	wet	lbs/ft	N/m	lbs/ft²	kg/m²	
Standard Materials													
WHT	White High Temperature (PP)	Polyester	40	220	212	4	104	100	400	6000	0.90	4.39	Yes
BHT	Blue High Temperature (PP)	Polyester	40	220	212	4	104	100	400	6000	0.90	4.39	Yes
WLT	White Low Temperature (PE)	Polyester	-100	80	80	-73	27	27	350	5000	0.98	4.78	Yes
BLT	Blue Low Temperature (PE)	Polyester	-100	80	80	-73	27	27	350	5000	0.98	4.78	Yes

Additional Notes

For belt width information see KleanTop Belt Width Table on page 48.

Open area = 20%

Minimum available width is 2 in (50.8 mm).

Belt strength is listed at room temperature.

For additional material information, see material portfolio.

Contact Regal Rexnord™ KleanTop Customer Service for specific product availability.

1018

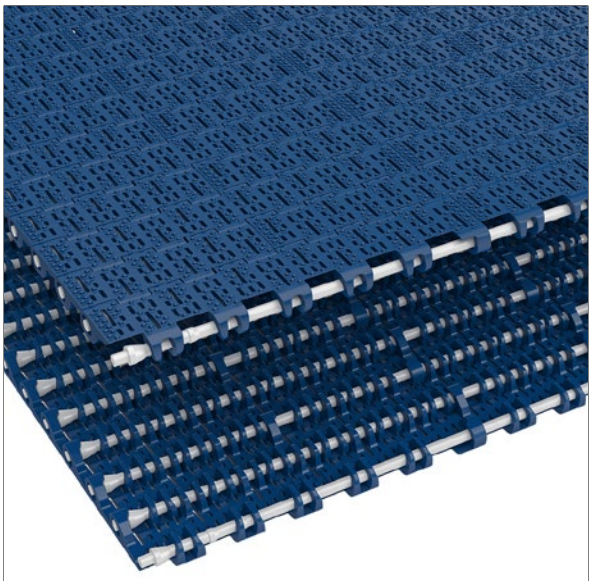

Photo shows 1018 KleanTop® Belt molded in Blue High Temperature (BHT) material.

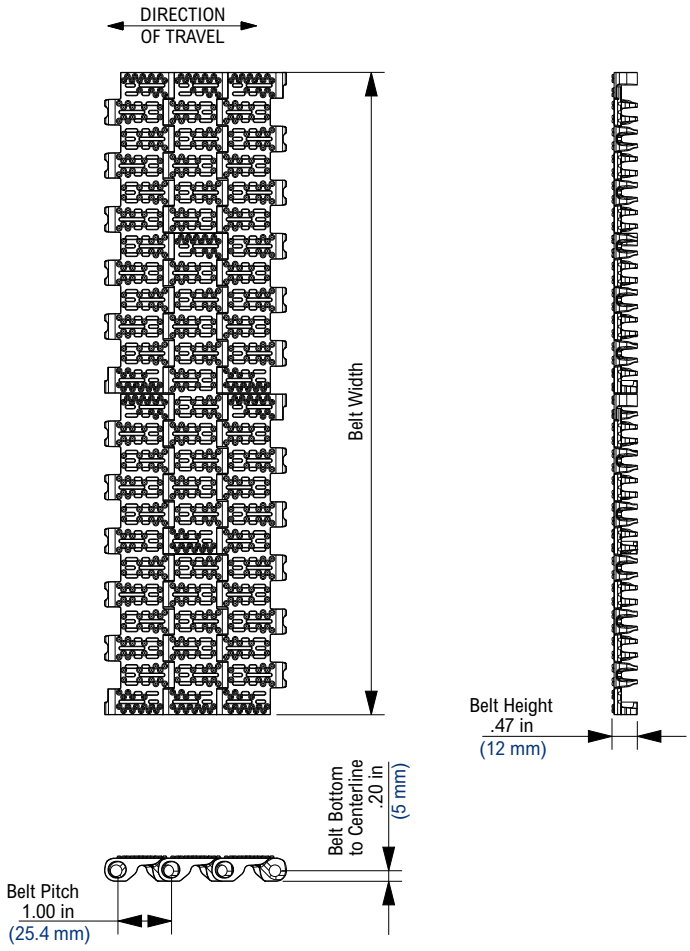

Belt Information

Belt Capacity	Number of Sprockets	
	per ft of width	per m of width
0% - 50%	3	6
50% - 100%	6	12

Available Materials

Prefix	Belt Material	Standard Pin Material	Temperature						Belt Strength		Approximate Weight		FDA Approval
			Fahrenheit			Celsius							
			min	max		min	max						
				dry	wet		dry	wet	lbs/ft	N/m	lbs/ft²	kg/m²	
Standard Materials													
WHT	White High Temperature (PP)	Polyester	40	220	212	4	104	100	400	6000	0.90	4.39	Yes
BHT	Blue High Temperature (PP)	Polyester	40	220	212	4	104	100	400	6000	0.90	4.39	Yes
WLT	White Low Temperature (PE)	Polyester	-100	80	80	-73	27	27	350	5000	0.98	4.78	Yes
BLT	Blue Low Temperature (PE)	Polyester	-100	80	80	-73	27	27	350	5000	0.98	4.78	Yes

Additional Notes

For belt width information see KleanTop Belt Width Table on page 48.

Open area = 20%

Minimum available width is 2 in (50.8 mm).

Belt strength is listed at room temperature.

For additional material information, see material portfolio.

Contact Regal Rexnord™ Customer Service for specific product availability.

KU1010 Bi-directional Drive Sprocket

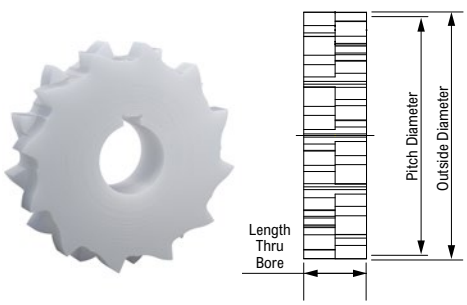

KU1010 Unii-directional Sprocket

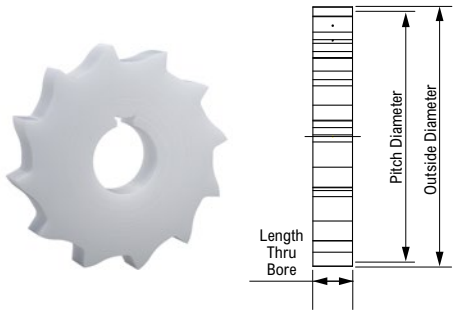

KU1010 Idler Sprocket

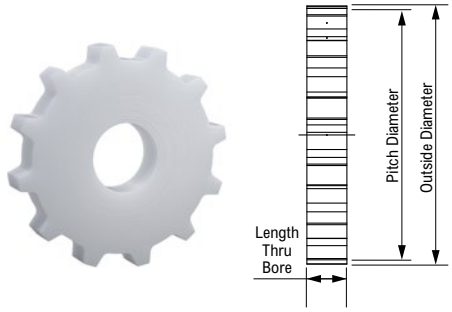

KU1010 Bi-directional Drive Sprocket Information

Number of Teeth		Pitch Diameter		Outside Diameter		Bore Diameter (Shaft-Ready)								Bore Diameter (Idler)				Approximate Weight		FDA Approval
						Round				Square										
		in				in		mm		in		mm		in		mm				
actual	effect	in	mm	in	mm	min	max	min	max	min	max	min	max	min	max	min	max	lbs	kg	
10	10	3.2	82.2	3.3	82.7	3/4	1 1/2	20	40	1	1 1/2	25	40	-	-	-	-	0.31	0.14	Yes
12	12	3.9	98.1	3.9	98.9	3/4	2	20	50	1	1 1/2	25	40	-	-	-	-	0.46	0.21	Yes
16	16	5.1	130.2	5.2	131.5	3/4	2 1/2	20	65	1	2 1/2	25	65	-	-	-	-	0.82	0.37	Yes
18	18	5.8	146.3	5.8	147.8	3/4	3	20	75	1	3	25	75	-	-	-	-	1.04	0.47	Yes
20	20	6.4	162.4	6.5	164	3/4	3 1/2	20	90	1	3 1/2	25	90	-	-	-	-	1.57	0.71	Yes

KU1010 Uni-directional Sprocket Information

Number of Teeth		Pitch Diameter		Outside Diameter		Bore Diameter (Shaft-Ready)								Bore Diameter (Idler)				Approximate Weight		FDA Approval
						Round				Square										
		in				in		mm		in		mm		in		mm				
actual	effect	in	mm	in	mm	min	max	min	max	min	max	min	max	min	max	min	max	lbs	kg	
10	10	3.2	82.2	3.3	82.7	3/4	1 1/2	20	40	1	1 1/2	25	40	-	-	-	-	0.16	0.07	Yes
12	12	3.9	98.1	3.9	98.9	3/4	2	20	50	1	1 1/2	25	40	-	-	-	-	0.23	0.11	Yes
16	16	5.1	130.2	5.2	131.5	3/4	2 1/2	20	65	1	2 1/2	25	65	-	-	-	-	0.41	0.19	Yes
18	18	5.8	146.3	5.8	147.8	3/4	3	20	75	1	3	25	75	-	-	-	-	0.52	0.24	Yes
20	20	6.4	162.4	6.5	164	3/4	3 1/2	20	90	1	3 1/2	25	90	-	-	-	-	0.79	0.36	Yes

KU1010 Idler Sprocket Information

Number of Teeth		Pitch Diameter		Outside Diameter		Bore Diameter (Shaft-Ready)								Bore Diameter (Idler)				Approximate Weight		FDA Approval
						Round				Square										
		in				in		mm		in		mm		in		mm				
actual	effect	in	mm	in	mm	min	max	min	max	min	max	min	max	min	max	min	max	lbs	kg	
10	10	3.2	82.2	3.3	82.7	-	-	-	-	-	-	-	-	3/4	1 1/2	20	40	0.16	0.07	Yes
12	12	3.9	98.1	3.9	98.9	-	-	-	-	-	-	-	-	3/4	2	20	50	0.23	0.11	Yes
16	16	5.1	130.2	5.2	131.5	-	-	-	-	-	-	-	-	3/4	2 1/2	20	65	0.41	0.19	Yes
18	18	5.8	146.3	5.8	147.8	-	-	-	-	-	-	-	-	3/4	3	20	75	0.52	0.24	Yes
20	20	6.4	162.4	6.5	164	-	-	-	-	-	-	-	-	3/4	3 1/2	20	90	0.79	0.36	Yes

1010 Series Flight Attachment (DRF-Style)

A flight with side-indent 0, 1" and 2" is available (1" indent is molded). Height of flight is 4" (available cut to lower height, with a minimum of 1/4").

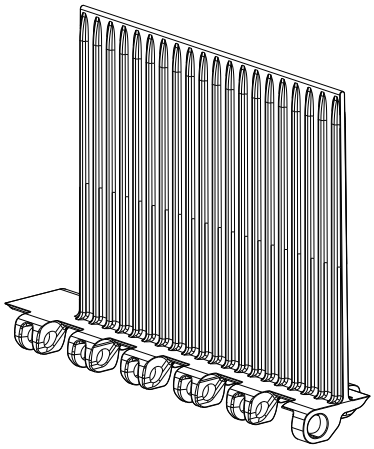

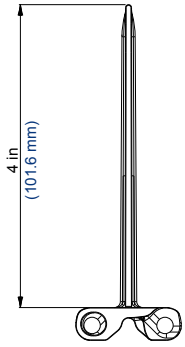

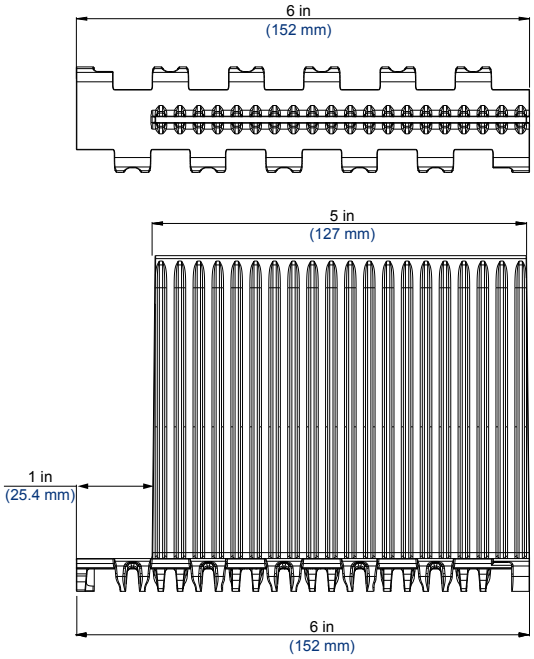

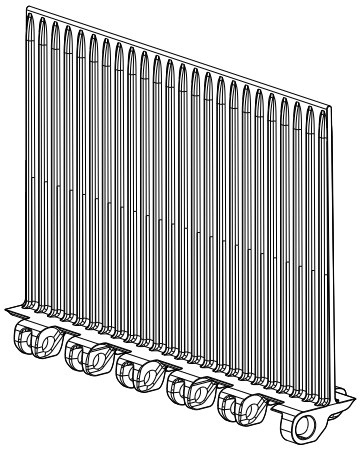

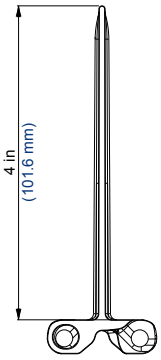

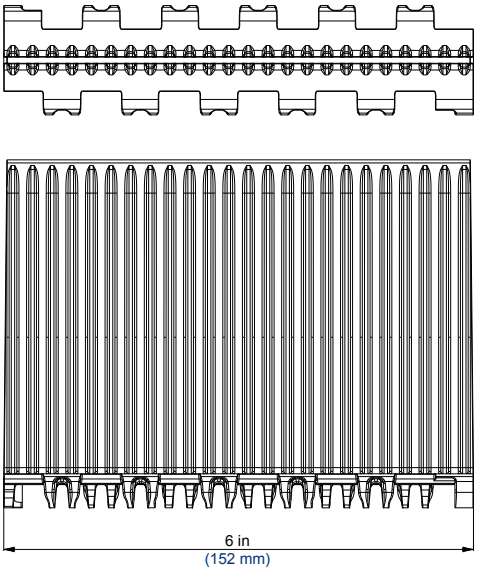

1010 Series 2" SideGuard Attachment

Side Guard placed left and right with a minimum side-indent of 1.5".

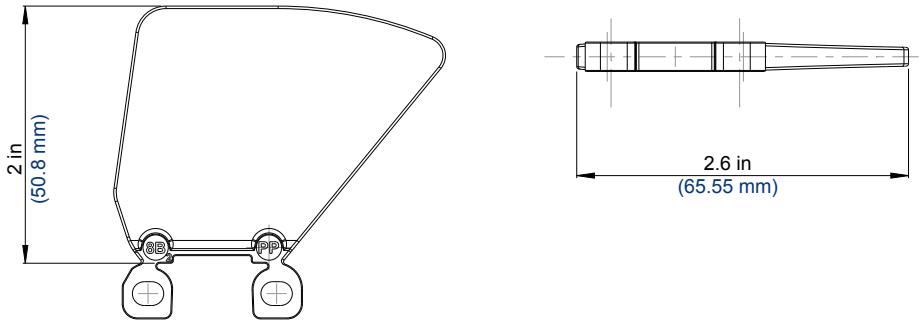

1010 Series 3" SideGuard Attachment

Side Guard placed left and right with a minimum side-indent of 1.5" – a different running direction is special.

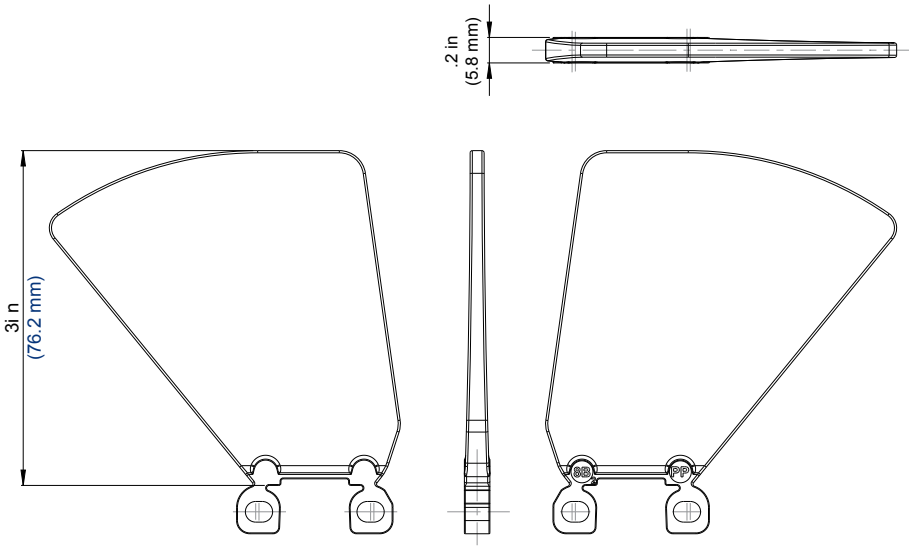

1095

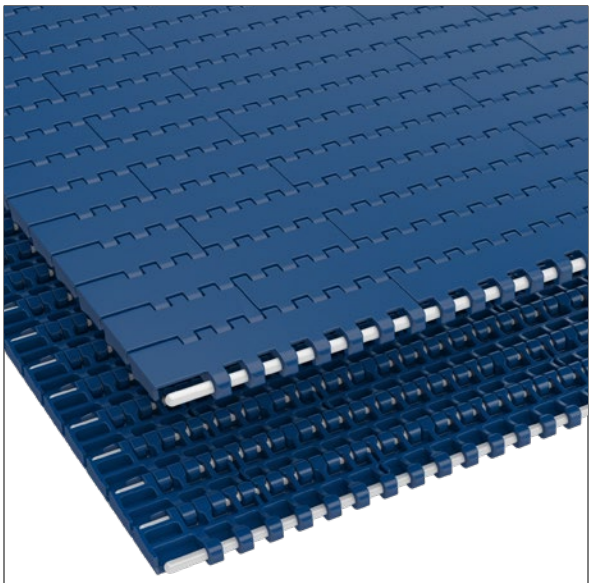

Photo shows 1095 KleanTop® Belt molded in Blue Cut Resistant (SMB).

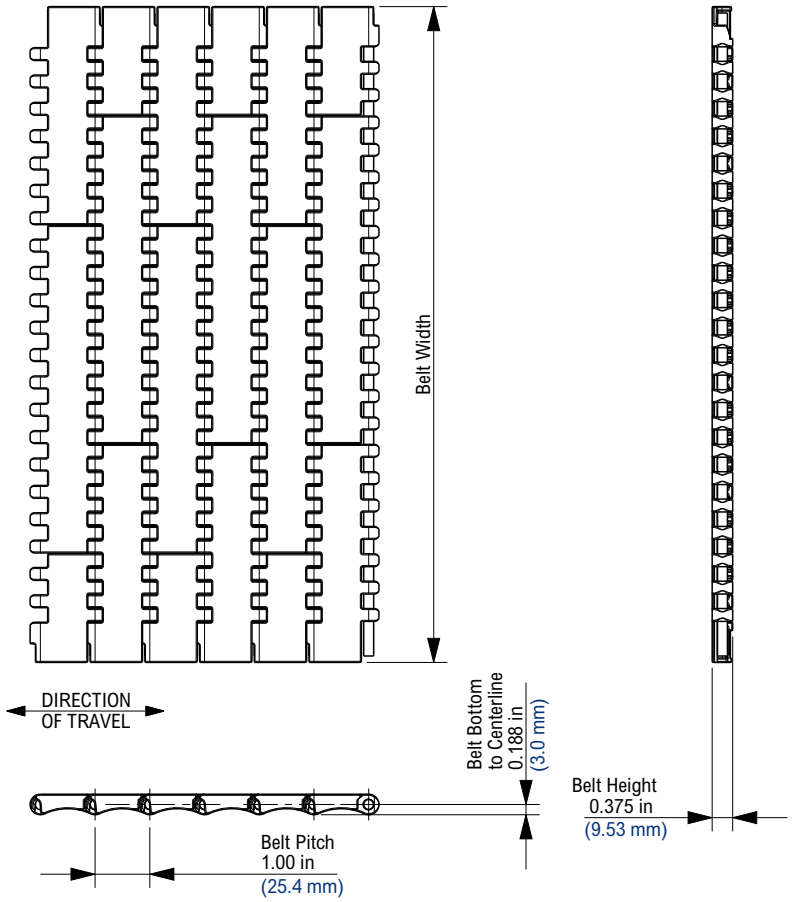

Belt Information

Belt Capacity	Number of Sprockets	
	per ft of width	per m of width
0% - 50%	3	9
50% - 100%	6	18

Available Materials

Prefix	Belt Material	Standard Pin Material	Temperature						Belt Strength		Approximate Weight		FDA Approval
			Fahrenheit			Celsius							
			min	max		min	max						
				dry	wet		dry	wet	lbs/ft	N/m	lbs/ft²	kg/m²	
Standard Materials													
SMB	Blue Cut Resistant (POM)	Polyester	-40	180	150	-40	82	66	1,500	21,884	1.48	7.23	Yes
WHT	White High Temperature (PP)	Polyester	40	220	212	4	104	100	900	13,130	0.95	4.64	Yes
BHT	Blue High Temperature (PP)	Polyester	40	220	212	4	104	100	900	13,130	0.95	4.64	Yes

Regulatory Information

For belt width information see KleanTop Belt Width Table on page 48.

Open area < 2%

Belt strength is listed at room temperature.

For additional material information, see material portfolio.

Contact Regal Rexnord™ Customer Service for specific product availability.

1096

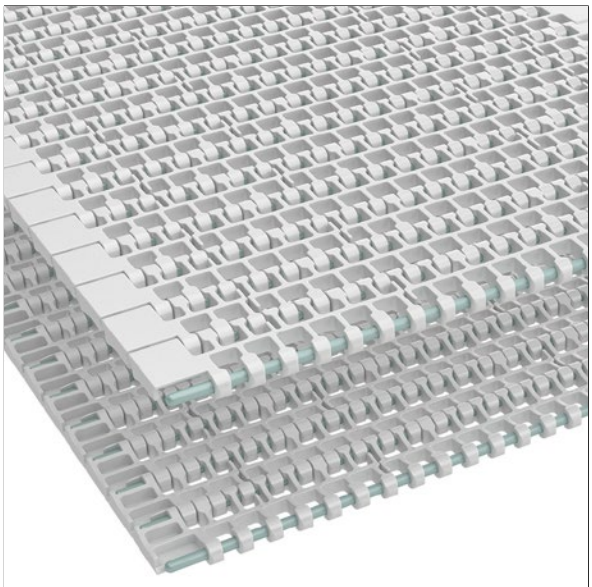

Photo shows 1096 KleanTop® Belt molded in White Hight Temperature (WHT) material.

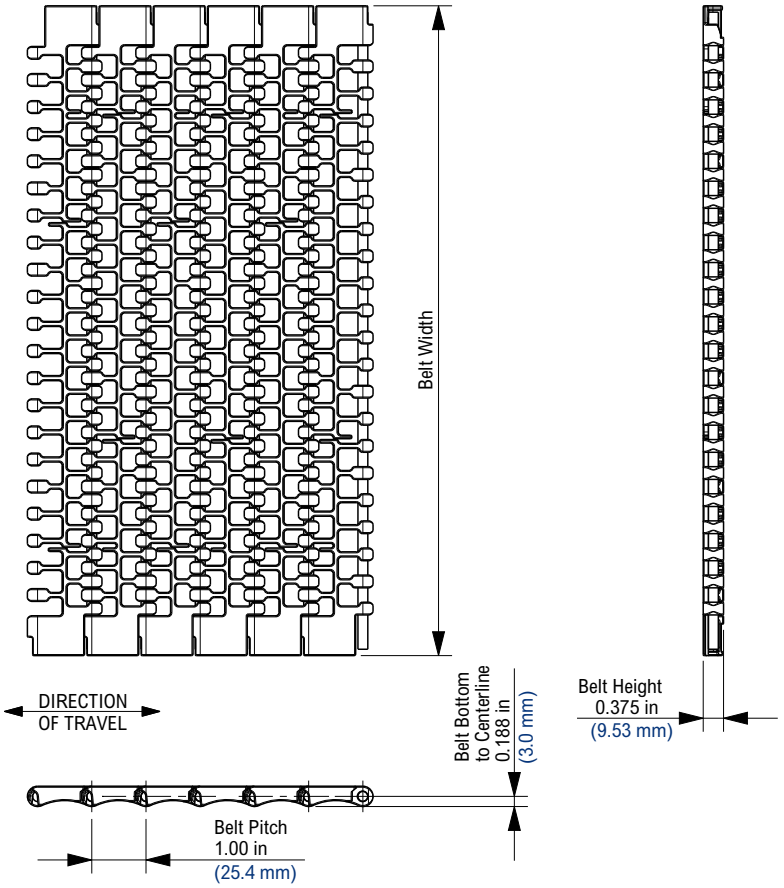

Belt Information

Belt Capacity	Number of Sprockets	
	per ft of width	per m of width
0% - 50%	3	9
50% - 100%	6	18

Available Materials

Prefix	Belt Material	Standard Pin Material	Temperature						Belt Strength		Approximate Weight		FDA Approval
			Fahrenheit			Celsius							
			min	max		min	max						
				dry	wet		dry	wet	lbs/ft	N/m	lbs/ft²	kg/m²	
Standard Materials													
SMB	Blue Cut Resistant (POM)	Polyester	-40	180	150	-40	82	66	1,500	21,884	1.12	5.47	Yes
WHT	White High Temperature (PP)	Polyester	40	220	212	4	104	100	900	13,130	0.72	3.52	Yes
BHT	Blue High Temperature (PP)	Polyester	40	220	212	4	104	100	900	13,130	0.72	3.52	Yes
FTR	Fryer Temperature Resistant (PA)	Polypropylene	-80	220	NR	-62	104	NR	1,500	21,884	1.01	4.92	Yes

Regulatory Information

For belt width information see KleanTop Belt Width Table on page 48.

Open area = 45%

Belt strength is listed at room temperature.

For additional material information, see material portfolio.

Contact Regal Rexnord™ Customer Service for specific product availability.

KU1090 Thermoplastic Sprocket

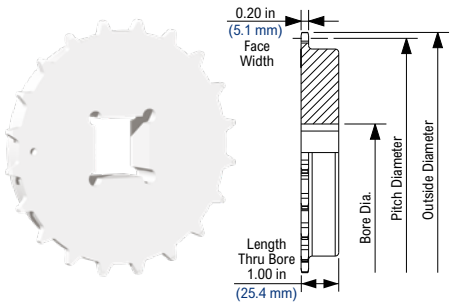

KUS1090 Thermoplastic Split Sprocket

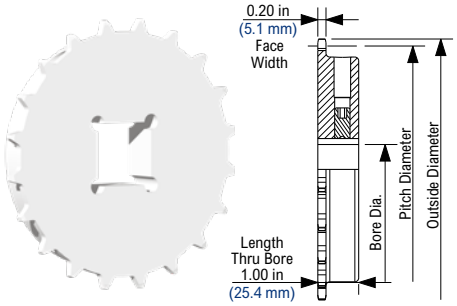

KU1090 Thermoplastic Sprocket Information

Number of Teeth		Pitch Diameter		Outside Diameter		Bore Diameter (Shaft-Ready)								Bore Diameter (Idler)				Approximate Weight	
						Round				Square									
		in		mm		in		mm		in		mm		in		mm			
actual	effect	in	mm	in	mm	min	max	min	max	min	max	min	max	min	max	min	max	lbs	kg
12T	12T	3.9	98.2	3.9	98	1	1 3/4	25	45	1	1 5/8	25	40	1	2 1/2	25	65	0.26	0.12
18T	18T	5.8	146.3	5.8	147.3	1	3 1/4	25	80	1	3	25	75	1	4 1/2	25	115	0.77	0.35
20T	20T	6.4	162.4	6.5	163.9	1	3 1/2	25	85	1	3 1/4	25	80	1	5	25	127	0.95	0.43

KUS1090 Thermoplastic Split Sprocket Information

Number of Teeth		Pitch Diameter		Outside Diameter		Bore Diameter (Shaft-Ready)								Bore Diameter (Idler)				Approximate Weight	
						Round				Square									
		in		mm		in		mm		in		mm		in		mm			
actual	effect	in	mm	in	mm	min	max	min	max	min	max	min	max	min	max	min	max	lbs	kg
12T	12T	3.9	98.2	3.9	98	-	-	-	-	1	1 1/2	25	35	-	-	-	-	0.24	0.11
18T	18T	5.8	146.3	5.8	147.3	1	2 3/4	25	70	1	2 3/4	25	70	1	3 1/4	25	80	0.82	0.37
20T	20T	6.4	162.4	6.5	163.9	1	3	25	75	1	3 1/4	25	80	1	3 1/2	25	85	1.00	0.45

1090 Series Minimum Nose-over Bar Diameter

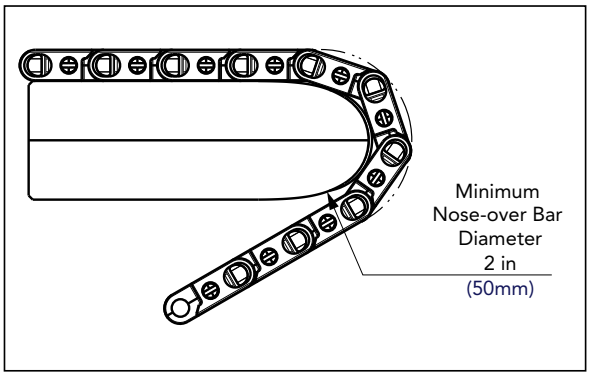

1090 Series Double Ribbed Flight Attachment (DRF-Style)

Flights are molded at 1in and 2in high. Can be cut down to a minimum of .25in. Minimum indent of 1.5in, with 0.5in increments.

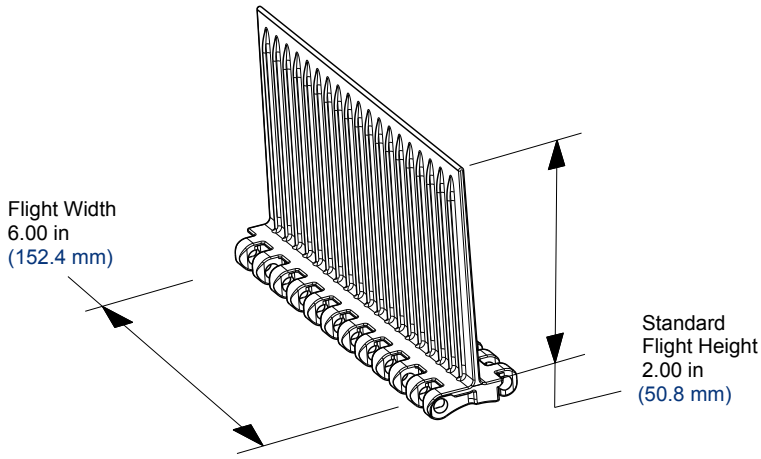

1090 Series SideGuard Attachment (SG-Style)

Molded 1" and 2" heights, left- and right-specific each available. Indents available at 1.25", 1.75", and 2.25".

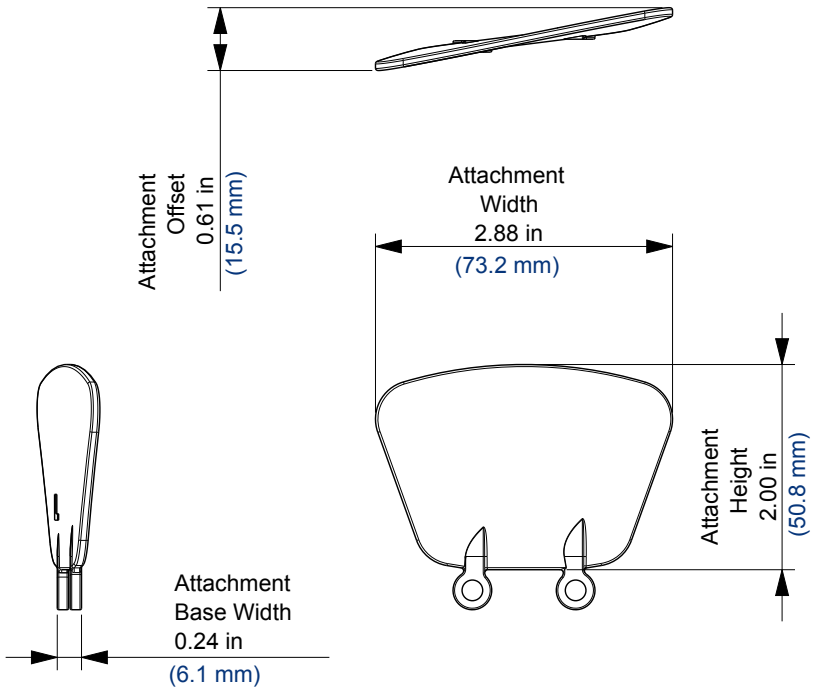

1255



Photo shows 1255 KleanTop® Belt molded in White High Temperature (WHT) material.

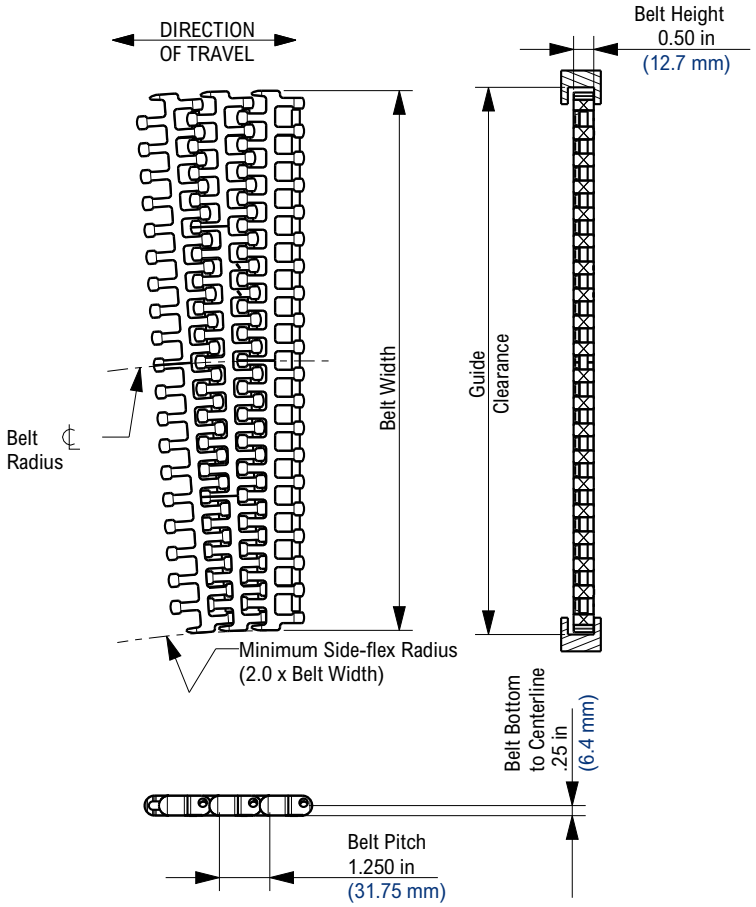

Belt Information

Belt Width		Drive Sprockets	Idler Sprockets
in	mm		
6.69	170	3	2
10.04	255	5	3
13.39	340	6	4
16.73	425	7	5
20.08	510	8	6
23.43	595	9	7
26.77	680	10	8
30.12	765	11	9

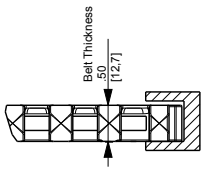

RB Guide Configuration

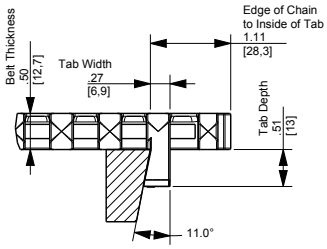

RBP Guide Configuration

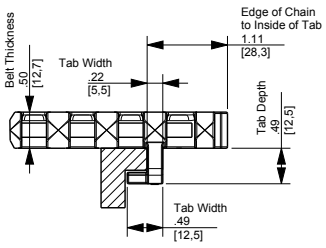

RBT Guide Configuration

Contact Customer Service for tab configuration options.

Available Materials

Prefix	Belt Material	Standard Pin Material	Temperature						Belt Strength				Approximate Weight		FDA Approval
			Fahrenheit			Celsius			Straight		Curve				
			min	max		min	max								
				dry	wet		dry	wet	lbs/ft	N/m	lbs	N	lbs/ft²	kg/m²	
Standard Materials															
SMB	Blue Cut Resistant (POM)	Polyester	-40	180	150	-40	82	66	1,508	22,000	450	2,000	1.64	8.00	Yes
WSM	White Cut Resistant (POM)	Polyester	-40	180	150	-40	82	66	1,508	22,000	450	2,000	1.64	8.00	Yes
WHT	White High Temperature (PP)	Polyester	40	220	212	4	104	100	754	11,000	270	1,200	1.07	5.20	Yes
BHT	Blue High Temperature (PP)	Polyester	40	220	212	4	104	100	754	11,000	270	1,200	1.07	5.20	Yes

Additional Notes

For belt width information see KleanTop Belt Width Table on page 48.

Open area = 39%

Belt strength is listed at room temperature.

For additional material information, see material portfolio.

Contact Regal Rexnord™ Customer Service for specific product availability.

"S-turn" capable KleanTop Belt.

1255 SuperGrip



Photo shows 1255 SuperGrip KleanTop® Belt molded in White High Temperature (WHT) material.

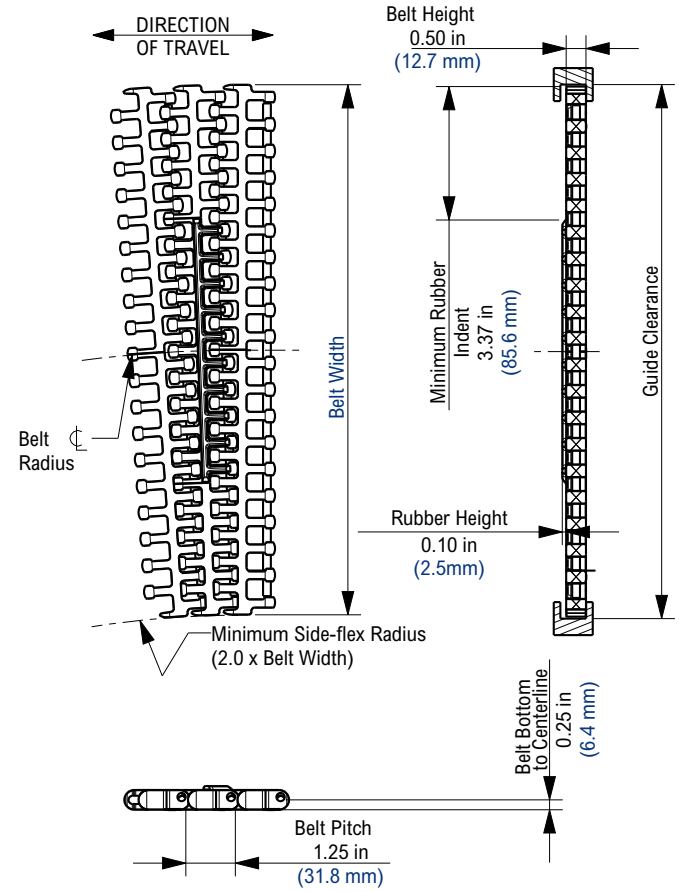

Belt Information

Belt Width		Drive Sprockets	Idler Sprockets
in	mm		
6.69	170	3	2
10.04	255	5	3
13.39	340	6	4
16.73	425	7	5
20.08	510	8	6
23.43	595	9	7
26.77	680	10	8
30.12	765	11	9

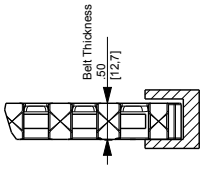

RB Guide Configuration

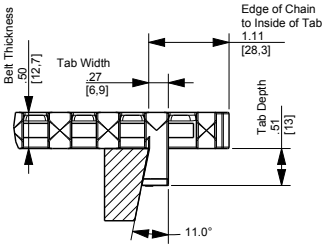

RBP Guide Configuration

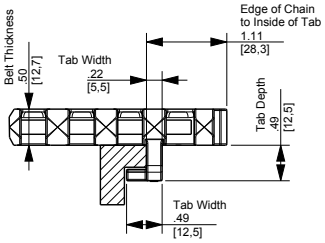

RBT Guide Configuration

Contact Customer Service for tab configuration options.

Available Materials

Prefix	Belt Material	Standard Pin Material	Temperature						Belt Strength				Approximate Weight		FDA Approval
			Fahrenheit			Celsius			Straight		Curve				
			min	max		min	max								
				dry	wet		dry	wet	lbs/ft	N/m	lbs	N	lbs/ft²	kg/m²	
Standard Materials															
WHT	White High Temperature (PP)	Polyester	40	220	212	4	104	100	754	11,000	270	1,200	1.07	5.20	Yes
BHT	Blue High Temperature (PP)	Polyester	40	220	212	4	104	100	754	11,000	270	1,200	1.07	5.20	Yes

Additional Notes

For belt width information see KleanTop Belt Width Table on page 48.

Open area = 39%

Belt strength is listed at room temperature.

For additional material information, see material portfolio.

Contact Regal Rexnord™ Customer Service for specific product availability.

"S-turn" capable KleanTop Belt.

1275

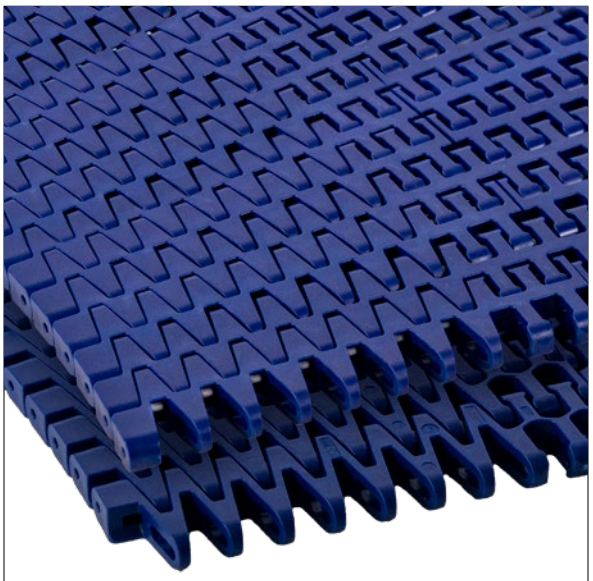

Photo shows 1275 KleanTop® Belt molded in Blue High Temperature (BHT) material.

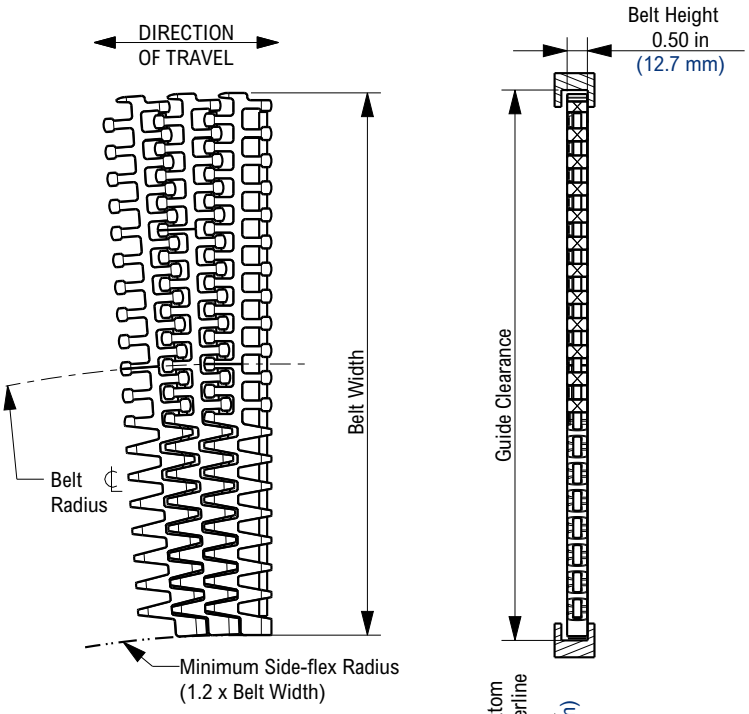

Belt Information

Belt Width		Drive Sprockets	Idler Sprockets
in	mm		
10.04	255	5	3
13.39	340	6	4
16.73	425	7	5
20.08	510	8	6
23.43	595	9	7
26.77	380	10	8
30.12	765	11	9

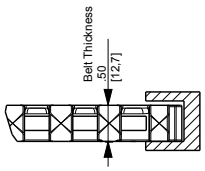

RB Guide Configuration

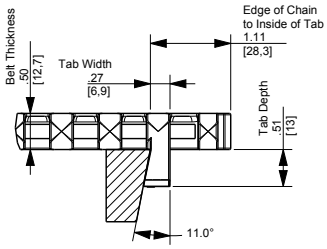

RBP Guide Configuration

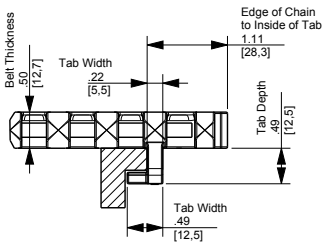

RBT Guide Configuration

Contact Customer Service for tab configuration options.

Available Materials

Prefix	Belt Material	Standard Pin Material	Temperature						Belt Strength				Approximate Weight		FDA Approval
			Fahrenheit			Celsius			Straight		Curve				
			min	max		min	max								
				dry	wet		dry	wet	lbs/ft	N/m	lbs	N	lbs/ft²	kg/m²	
Standard Materials															
SMB	Blue Cut Resistant (POM)	Polyester	-40	180	150	-40	82	66	1,508	22,000	450	2,000	1.64	8.00	Yes

Additional Notes

For belt width information see KleanTop Belt Width Table on page 48.

Open area = 39%

Belt strength is listed at room temperature.

For additional material information, see material portfolio.

Contact Regal Rexnord™ Customer Service for specific product availability.

1275 combines 1255 outer & center modules with tight side-flexing 1275 inner modules.

KU1200 Thermoplastic Sprocket

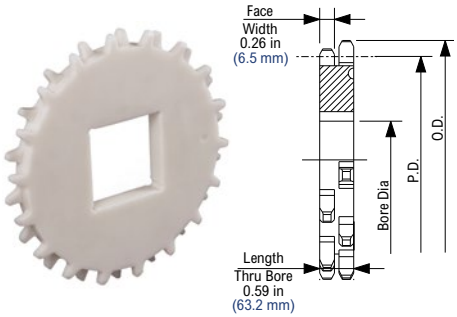

KUS1200 Thermoplastic Split Sprocket

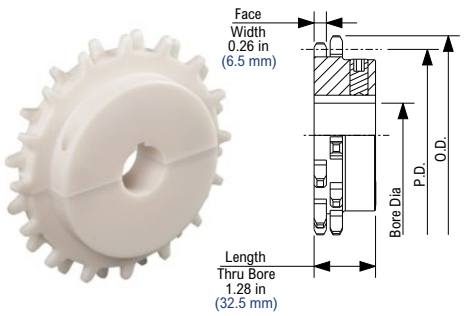

KU1200 Thermoplastic Sprocket Information

Number of Teeth		Pitch Diameter		Outside Diameter		Bore Diameter (Shaft-Ready)								Bore Diameter (Round)				Approximate Weight	
						Round				Square									
		in		in		in		mm		in		mm		in		mm			
actual	effect	in	mm	in	mm	min	max	min	max	min	max	min	max	min	max	min	max	lbs	kg
10T	10T	4	102.8	4.2	106.6	1	2	25	55	1	1 1/2	25	40	1	2	20	55	0.19	0.09
13T	13T	5.2	132.7	5.4	137.5	1	3	25	75	1	2 1/2	25	60	1	3	20	75	0.38	0.20
15T	15T	6	152.7	6.2	158.1	1 3/16	3 1/2	30	105	1	3	25	70	1	3 1/2	20	105	0.53	0.24
16T	16T	6.4	162.8	6.6	168.3	1 3/16	3 1/2	30	115	1	3	25	80	1	3 1/2	20	115	0.60	0.27

KUS1200 Thermoplastic Split Sprocket Information

Number of Teeth		Pitch Diameter		Outside Diameter		Bore Diameter (Shaft-Ready)								Bore Diameter (Idler)				Approximate Weight	
						Round				Square									
		in		in		in		mm		in		mm		in		mm			
actual	effect	in	mm	in	mm	min	max	min	max	min	max	min	max	min	max	min	max	lbs	kg
10T	10T	4	102.8	4.2	106.6	1	1 1/2	20	40	1	1 3/8	25	35	1	1 5/8	25	40	0.39	0.2
13T	13T	5.2	132.7	5.4	137.5	1	1 7/8	25	45	1	1 1/2	25	40	1	1 7/8	25	50	0.63	0.3
15T	15T	6	152.7	6.2	158.1	1 3/16	2 3/4	25	70	1	2 1/4	25	60	1	2 3/4	25	70	0.86	0.4
16T	16T	6.4	162.8	6.6	168.3	1 3/16	3	30	70	1	2 1/2	25	65	1	3	25	75	1.03	0.5

1654

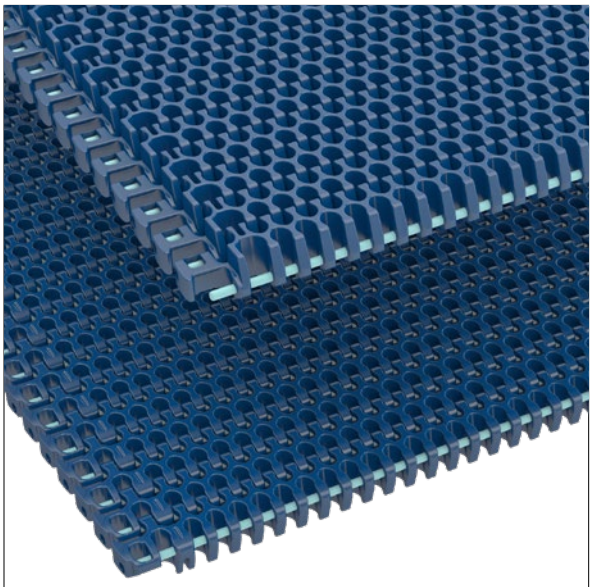

Photo shows 1654 KleanTop® High Deck Belt molded in Blue Cut Resistant material.

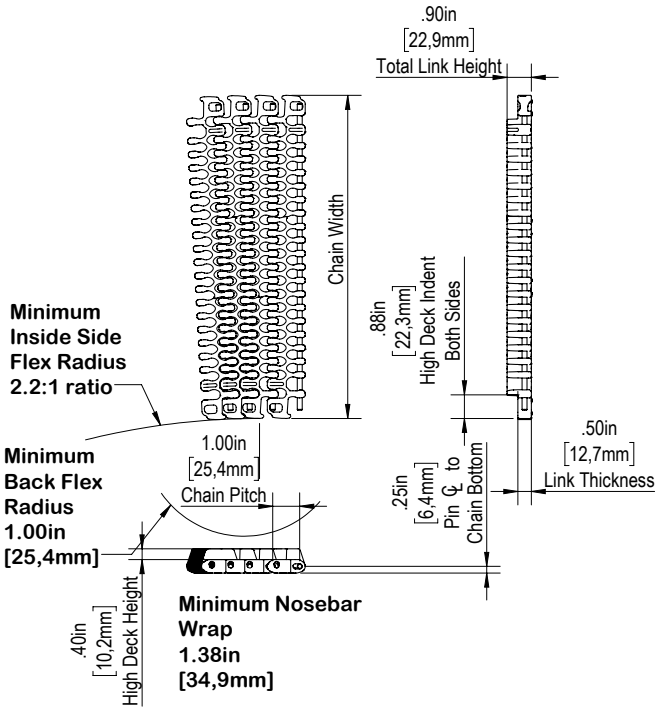

Belt Information

Min	Number of Sprockets	
	per ft of width	per m of width
Drive Shaft	3	9
Idler Shaft	2	4

Available Materials

Prefix	Belt Material	Standard Pin Material	Temperature						Belt Strength				Approximate Weight		FDA and EU Approval
			Fahrenheit			Celsius			Straight		Curve				
			min	max		min	max								
				dry	wet		dry	wet	lbs/ft	N/m	lbs	N	lbs/ft²	Kg/m²	
Standard Materials															
SMB	Blue Cut Resistant	Polyester	-40º	180º	150º	-40º	82º	66º	1,713	25,000	540	2,400	2.97	14,50	Yes
WHT	White High Temperature	Polyester	40º	220º	212º	4º	104º	100º	1,096	16,000	270	1,200	2.03	9,91	Yes
FTR	Fryer Temperature Resistant (PA)	Polyester	-80º	220º	NR	-62º	104º	NR	1,636*	23,000*	480*	2,170*	2.42	11,82	Yes
Non-standard Materials															
WSM	White Cut Resistant	Polyester	-40º	180º	150º	-40º	82º	66º	1,713	25,000	540	2,400	2.97	14,50	Yes
BHT	Blue High Temperature	Polyester	40º	220º	212º	4º	104º	100º	1,096	16,000	270	1,200	2.03	9,91	Yes

*FTR belt strengths listed are for dry conditions only.

Additional Notes

1654 KleanTop standard radius is "S" turn and nose-bar capable.

Standard radius side flex ratio of 2:2:1

Belt widths available from 6 inch (152,4mm) to 48 inches (1219,2mm).

Consult your Regal Rexnord™ sales representative for standard width offering.

Open area = 38%

Belt strength is listed at room temperature and **appropriately adjusted actual for load ratings.**

For additional material information, see the material portfolio online at regalrexnord.com or contact Regal Rexnord Application Engineering.

Contact Regal Rexnord Customer Care or your Regal Rexnord sales representative for specific product and ordering information.

1655

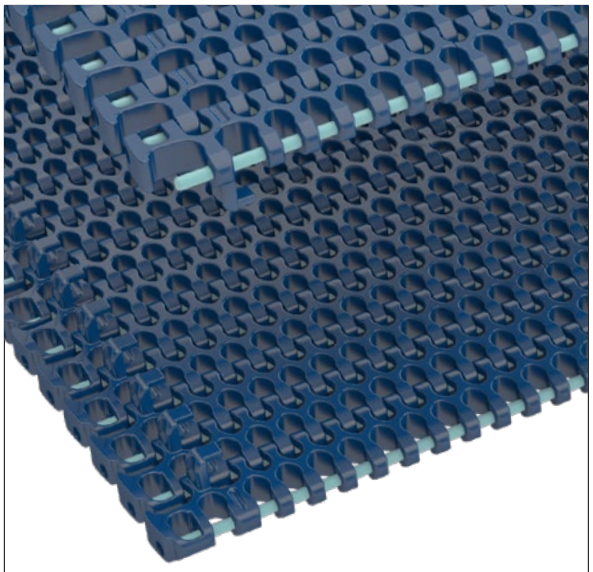

Photo shows 1655 KleanTop® Flush Grid Belt molded in Blue Cut Resistant material.

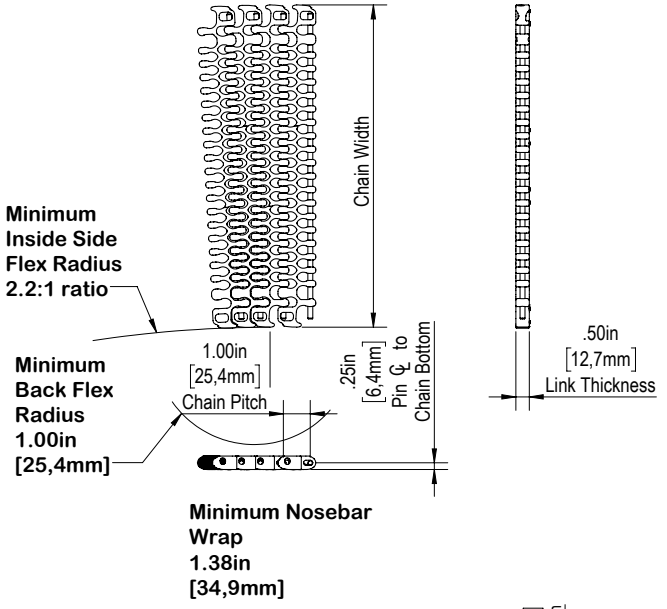

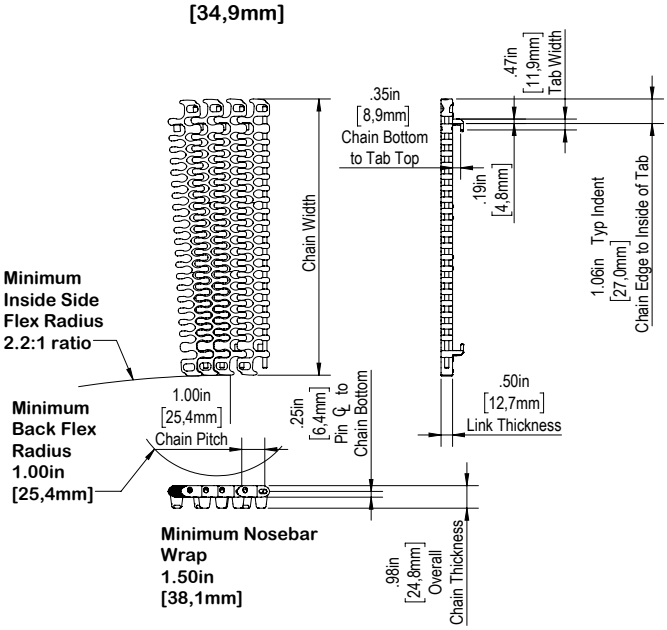

Belt Information

Min	Number of Sprockets	
	per ft of width	per m of width
Drive Shaft	3	9
Idler Shaft	2	4

Available Materials

Prefix	Belt Material	Standard Pin Material	Temperature						Belt Strength				Approximate Weight		FDA Approval
			Fahrenheit			Celsius			Straight		Curve				
			min	max		min	max								
				dry	wet		dry	wet	lbs/ft	N/m	lbs	N	lbs/ft²	Kg/m²	
Standard Materials															
SMB	Blue Cut Resistant	Polyester	-40	+180	+150	-40	+82	+66	1,713	25,000	540	2,400	1.79	8.74	Yes
WHT	White High Temperature	Polyester	+40	+220	+212	+4	+104	+100	1,096	16,000	270	1,200	1.24	6.07	Yes
Non-standard Materials															
WSM	White Cut Resistant	Polyester	-40	+180	+150	-40	+82	+66	1,713	25,000	540	2,400	1.79	8.74	Yes
BHT	Blue High Temperature	Polyester	+40	+220	+212	+4	+104	+100	1,096	16,000	270	1,200	1.24	6.07	Yes

Additional Notes

1655 KleanTop standard radius is "S" turn and nose-bar capable.

Standard radius side flex ratio of 2:2:1

Belt widths available from 6 inch (152,4mm) to 48 inches (1219,2mm).

Consult your Regal Rexnord™ sales representative for standard width offering.

Open area = 38%

Belt strength is listed at room temperature and **appropriately adjusted actual for load ratings.**

For additional material information, see the material portfolio online at regalrexnord.com or contact Regal Rexnord Application Engineering.

Contact Regal Rexnord Customer Care or your Regal Rexnord sales representative for specific product and ordering information.

1675

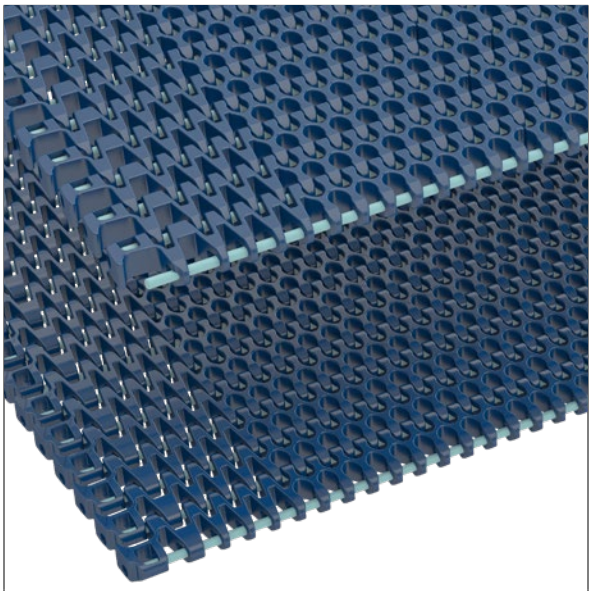

Photo shows 1675 KleanTop® Tight Radius Belt molded in Blue Cut Resistant material.

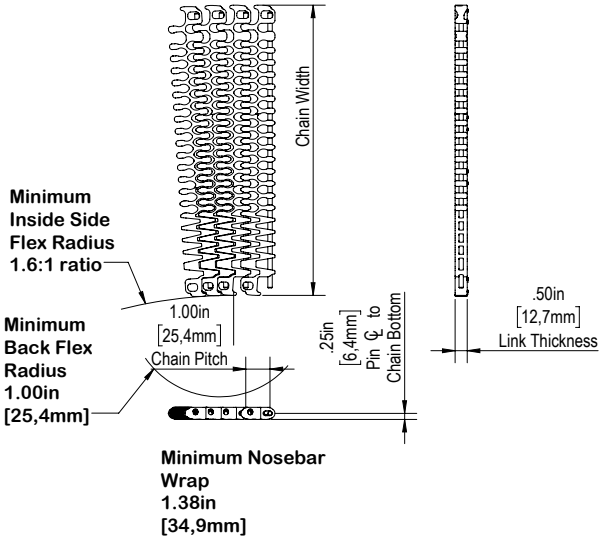

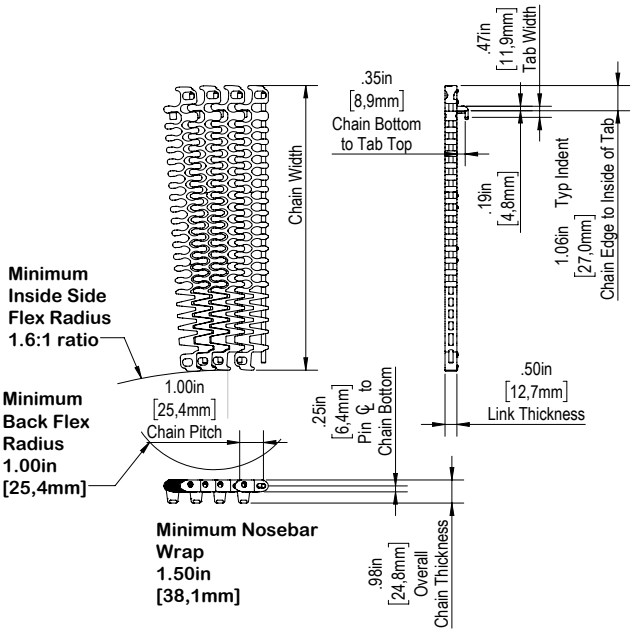

Belt Information

Min	Number of Sprockets	
	per ft of width	per m of width
Drive Shaft	3	9
Idler Shaft	2	4

Available Materials

Prefix	Belt Material	Standard Pin Material	Temperature						Belt Strength				Approximate Weight		FDA Approval
			Fahrenheit			Celsius			Straight		Curve				
			min	max		min	max								
				dry	wet		dry	wet	lbs/ft	N/m	lbs	N	lbs/ft²	Kg/m²	
Standard Materials															
SMB	Blue Cut Resistant	Polyester	-40º	180º	150º	-40º	82º	66º	1,713	25,000	540	2,400	1.79	8,74	Yes
WHT	White High Temperature	Polyester	40º	220º	212º	4º	104º	100º	1,096	16,000	270	1,200	1.24	6,07	Yes
Non-standard Materials															
WSM	White Cut Resistant	Polyester	-40º	180º	150º	-40º	82º	66º	1,713	25,000	540	2,400	1.79	8,74	Yes
BHT	Blue High Temperature	Polyester	40º	220º	212º	4º	104º	100º	1,096	16,000	270	1,200	1.24	6,07	Yes

Additional Notes

1675 KleanTop standard radius is nose-bar capable.

Tight radius side flex ratio of 1:6:1

Belt widths available from 6 inch (152,4mm) to 48 inches (1219,2mm).

Consult your Regal Rexnord™ sales representative for standard width offering.

Open area = 38%

Belt strength is listed at room temperature and **appropriately adjusted actual for load ratings.**

For additional material information, see the material portfolio online at regalrexnord.com or contact Regal Rexnord Application Engineering.

Contact Regal Rexnord Customer Care or your Regal Rexnord sales representative for specific product and ordering information.

KUS1600 Thermoplastic Sprocket



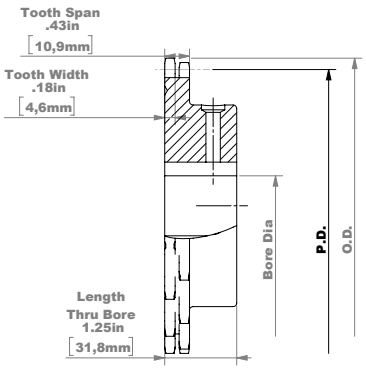

KU1600 Thermoplastic Sprocket Information

Number of Teeth		Pitch Diameter		Outside Diameter		Bore Diameter (Shaft-Ready)								Bore Diameter (Round)				Approximate Weight	
						Round				Square									
		in		mm		in		mm		in		mm		in		mm			
actual	effect	in	mm	in	mm	min	max	min	max	min	max	min	max	min	max	min	max	lbs	kg
6T	6T	2.0	50,8	1.9	48,3	0.75*	0.75*	20*	20*	–	–	–	–	0.8	0.9	19	20	0.04	0.02
9T	9T	2.9	74,3	2.9	73,7	0.8	1.1	20	25	–	–	–	–	0.8	1.5	19	35	0.14	0.06
12T	12T	3.9	98,1	3.9	98,0	1	1.4	25	40	1.0	1.5	25	30	1	2.1	25	55	0.29	0.13
16T	16T	5.1	130,2	5.2	130,9	1	2.3	25	55	1.0	2	25	50	1	3.3	25	80	0.64	0.29
18T	18T	5.8	146,3	5.8	147,3	1	2.8	25	70	1.0	2.5	25	60	1	3.8	25	90	0.88	0.40
20T	20T	6.4	162,4	6.5	163,9	1	3.3	25	80	1.0	2.8	25	70	1	4	25	100	1.13	0.51

* pre-bore



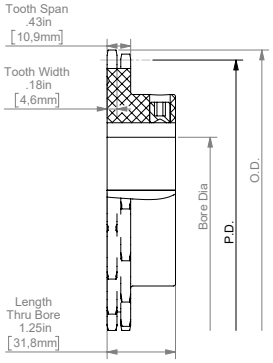

KUS1600 Thermoplastic Split Sprocket Information

Number of Teeth		Pitch Diameter		Outside Diameter		Bore Diameter (Shaft-Ready)								Bore Diameter (Idler)				Approximate Weight	
						Round				Square									
		in		mm		in		mm		in		mm		in		mm			
actual	effect	in	mm	in	mm	min	max	min	max	min	max	min	max	min	max	min	max	lbs	kg
12T	12T	3.9	98,1	3.9	98,0	1	1.6	25	40	1	1.6	25	40	1	1.8	25	45	0.36	0.16
16T	16T	5.1	130,2	5.2	130,9	1	2	25	50	1.0	2	25	50	1	2.4	25	60	0.63	0.29
18T	18T	5.8	146,3	5.8	147,3	1	2.5	25	60	1.0	2.3	25	55	1	2.8	25	70	0.88	0.40
20T	20T	6.4	162,4	6.5	163,9	1	3	25	75	1.0	2.8	25	70	1	3.6	25	90	1.13	0.51

Regal Rexnord™ recommends dual tooth sprocket to increase belt life.
Consult Regal Rexnord Application Team and Engineering manual to allow for proper alingment of single row tooth sprockets.

2011

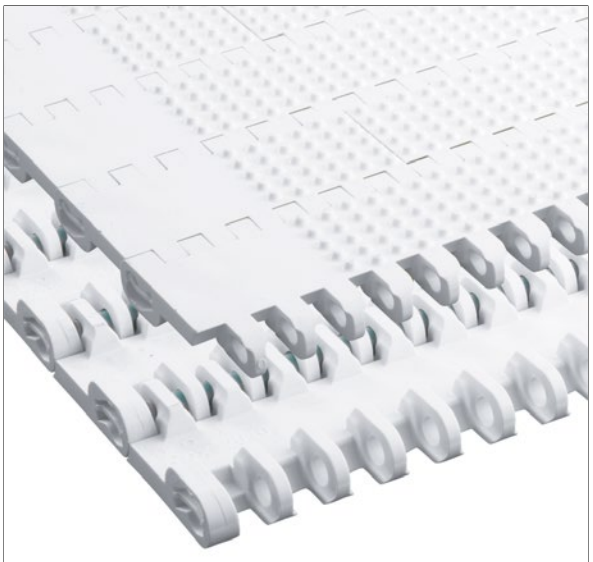

Photo shows 2011 KleanTop® Belt molded in White High Temperature (WHT) material.

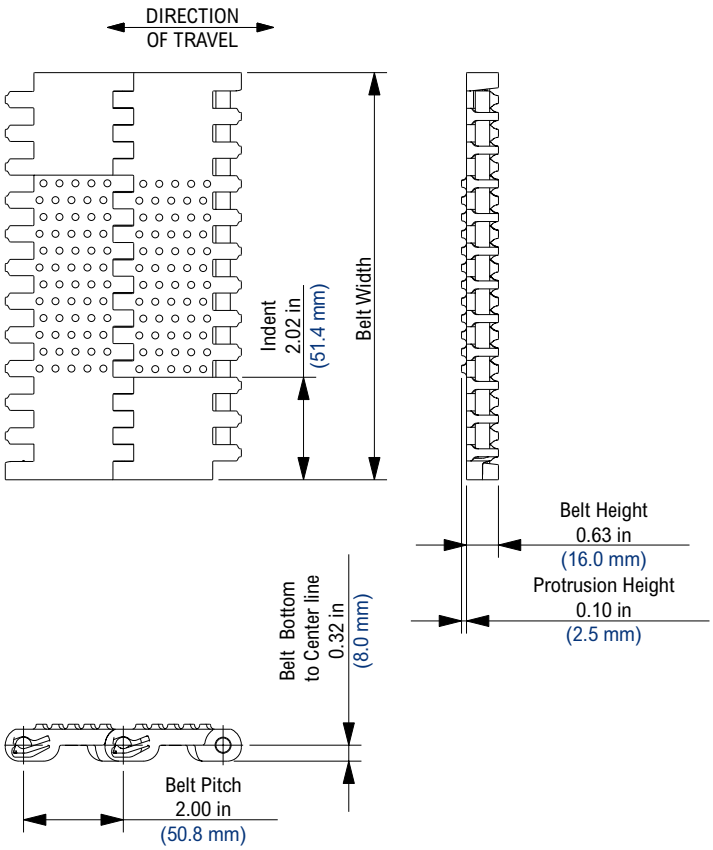

Belt Information

Belt Capacity	Number of Sprockets	
	per ft of width	per m of width
0% - 17%	2	7
17% - 50%	3	10
50% - 100%	4	13

Available Materials

Prefix	Belt Material	Standard Pin Material	Temperature						Belt Strength		Approximate Weight		FDA Approval
			Fahrenheit			Celsius							
			min	max		min	max						
				dry	wet		dry	wet	lbs/ft	N/m	lbs/ft²	kg/m²	
Standard Materials													
BHT	Blue High Temperature (PP)	Polypropylene	40	220	212	4	104	100	800	11,672	1.89	9.23	Yes
BLT	Blue Low Temperature (PE)	Polyethylene	-100	80	80	-73	27	27	500	7,295	2.03	9.91	Yes
WHT	White High Temperature (PP)	Polypropylene	40	220	212	4	104	100	800	11,672	1.89	9.23	Yes
WLT	White Low Temperature (PE)	Polyethylene	-100	80	80	-73	27	27	500	7,295	2.03	9.91	Yes

Additional Notes

Non-Standard products are non-returnable. Minimum order quantity and additional setup charges may also apply.

For belt width information see KleanTop Belt Width Table on page 48.

Open area < 2%

Stainless steel pins are available on a Mold-To-Order basis.

All 2011 belts are supplied with 2 in (50.8 mm) indent without nubs.

Belt strength is listed at room temperature.

For additional material information, see material portfolio.

Contact Regal Rexnord™ Customer Service for specific product availability.

2015

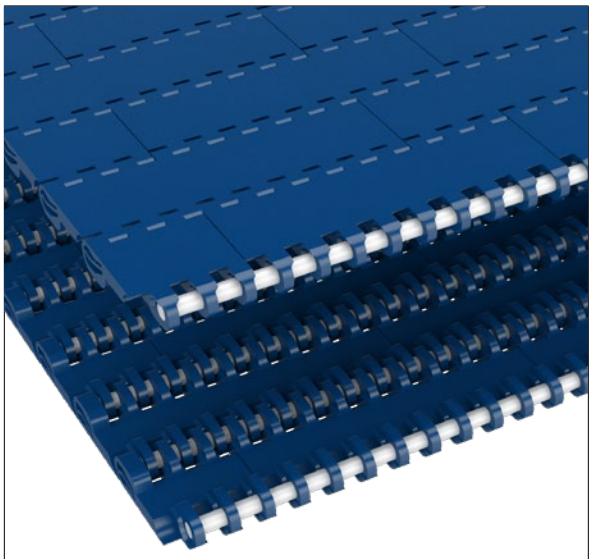

Photo shows 2015 KleanTop® Belt molded in Blue High Temperature (BHT) material.

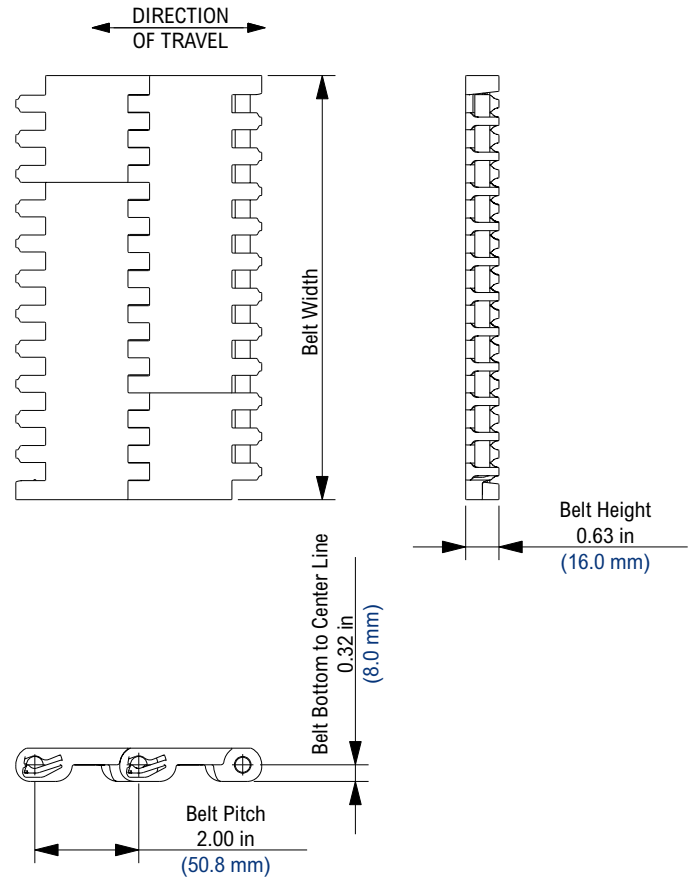

Belt Information

Belt Capacity	Number of Sprockets	
	per ft of width	per m of width
0% - 17%	2	7
17% - 50%	3	10
50% - 100%	4	13

Available Materials

Prefix	Belt Material	Standard Pin Material	Temperature						Belt Strength		Approximate Weight		FDA Approval
			Fahrenheit			Celsius							
			min	max		min	max						
				dry	wet		dry	wet	lbs/ft	N/m	lbs/ft²	kg/m²	
Standard Materials													
BHT	Blue High Temperature (PP)	Polypropylene	40	220	212	4	104	100	800	11,672	1.89	9.23	Yes
BLT	Blue Low Temperature (PE)	Polyethylene	-100	80	80	-73	27	27	500	7,295	2.03	9.91	Yes
FTR	Fryer Temperature Resistant (PA)	Polyester	-80	220	NR	-62	104	NR	1,000	14,590	2.89	14.11	Yes
WHT	White High Temperature (PP)	Polypropylene	40	220	212	4	104	100	800	11,672	1.89	9.23	Yes
WLT	White Low Temperature (PE)	Polyethylene	-100	80	80	-73	27	27	500	7,295	2.03	9.91	Yes
WSM	White Cut Resistant (POM)	Polyester	-40	180	150	-40	82	66	1,000	14,590	2.89	14.11	Yes

Additional Notes

For belt width information see KleanTop Belt Width Table on page 48.

Open area < 2%

Stainless steel pins are available on a Mold-To-Order basis.

Belt strength is listed at room temperature.

For additional material information, see material portfolio.

Contact Regal Rexnord™ Customer Service for specific product availability.

2016

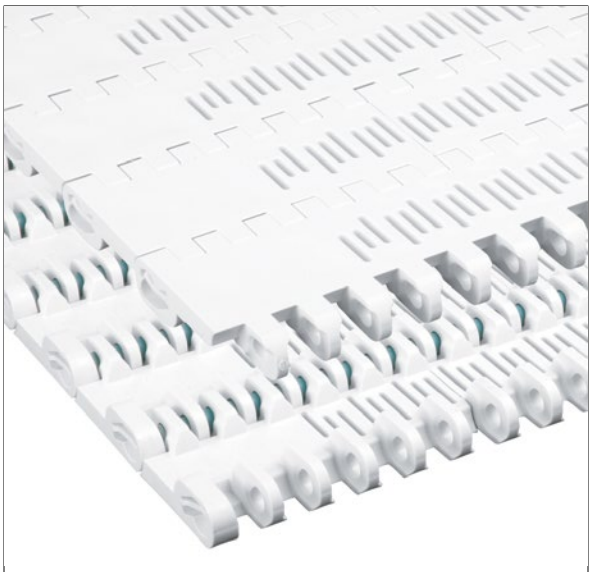

Photo shows 2011 KleanTop® Belt molded in White High Temperature (WHT) material.

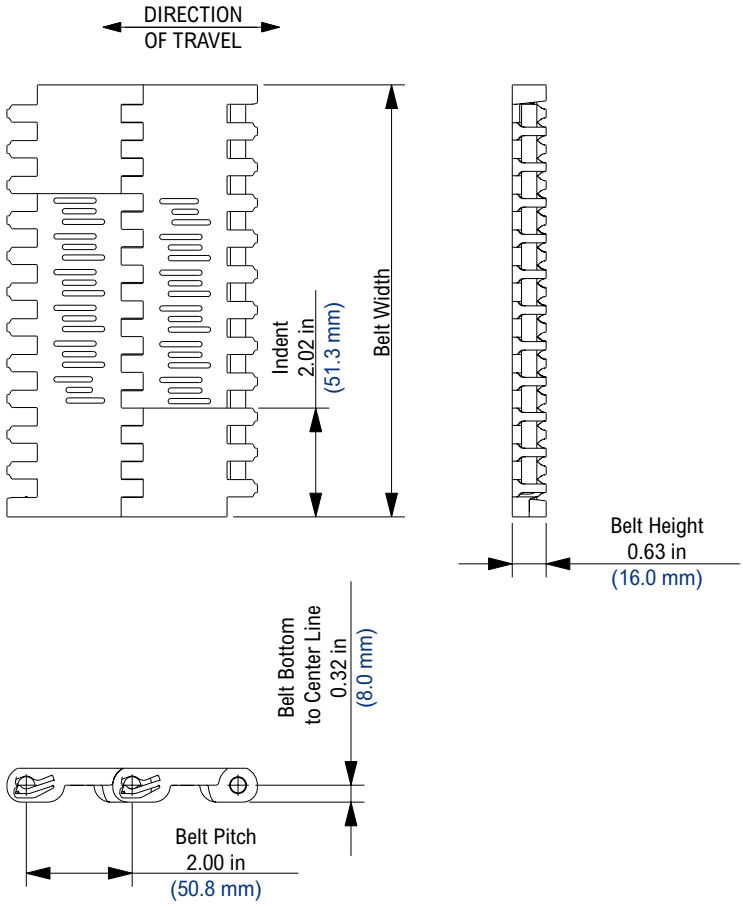

Belt Information

Belt Capacity	Number of Sprockets	
	per ft of width	per m of width
0% - 17%	2	7
17% - 50%	3	10
50% - 100%	4	13

Available Materials

Prefix	Belt Material	Standard Pin Material	Temperature						Belt Strength		Approximate Weight		FDA Approval
			Fahrenheit			Celsius							
			min	max		min	max						
				dry	wet		dry	wet	lbs/ft	N/m	lbs/ft²	kg/m²	
Standard Materials													
BHT	Blue High Temperature (PP)	Polypropylene	40	220	212	4	104	100	800	11,672	1.89	9.23	Yes
FTR	Fryer Temperature Resistant (PA)	Polyester	-80	220	NR	-62	104	NR	1,000	14,590	2.89	14.11	Yes
WHT	White High Temperature (PP)	Polypropylene	40	220	212	4	104	100	800	11,672	1.89	9.23	Yes
WLT	White Low Temperature (PE)	Polyethylene	-100	80	80	-73	27	27	500	7,295	2.03	9.91	Yes

Additional Notes

For belt width information see KleanTop Belt Width Table on page 48.

Open area = 18%

Stainless steel pins are available on a Mold-To-Order basis.

All 2016 belts are supplied with 2 in (50.8 mm) indent without nubs.

Belt strength is listed at room temperature.

For additional material information, see material portfolio.

Contact Regal Rexnord™ Customer Service for specific product availability.

KU2010 TruTrack Thermoplastic Sprocket

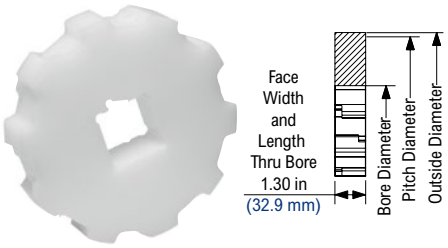

KU2010 TruTrack Thermoplastic Sprocket Information

Number of Teeth		Pitch Diameter		Outside Diameter		Bore Diameter (Shaft-Ready)								Bore Diameter (Idler)				Approximate Weight		FDA Approval
						Round				Square										
		in		in		in		mm		in		mm		in		mm				
actual	effect	in	mm	in	mm	min	max	min	max	min	max	min	max	min	max	min	max	lbs	kg	
8	8	5.2	132.7	4.8	120.9	3/4	3	20	75	1 1/2	2	40	50	3/4	3	20	75	0.44	0.20	Yes
10	10	6.5	164.4	6.1	153.9	3/4	3 1/2	20	90	1 1/2	2 1/2	40	65	3/4	3 1/2	20	90	1.06	0.48	Yes
12	12	7.7	196.3	7.4	188	1	3 1/2	25	90	1 1/2	3 1/2	40	90	1	3 1/2	25	90	1.59	0.72	Yes
16	16	10.3	260.4	10.3	262.1	1	3 1/2	25	90	1 1/2	4 1/2	40	120	1	3 1/2	25	90	3.62	1.64	Yes

Shaft-ready bores are shipped with keyway and no setscrew. Idler bores are designed to spin freely on the shaft. Custom machined sprocket sizes are available on MTO basis. KU2010 sprockets are available in UHMWPE or abrasion resistant Nylon. Material must be noted when ordering.

Flight Attachment (F-Style)

All flight attachments are molded 6 in (152.4 mm) wide and in two heights: F6 with a 6 in (152.4 mm) height and F4 with 4 in (101.6 mm) height. Flight attachments can be cut down to a minimum height of 1/4 in (6.35 mm).

When ordering, please indicate if flight attachments are required every pitch, every second pitch, etc.

See page 6 for ordering guidelines.

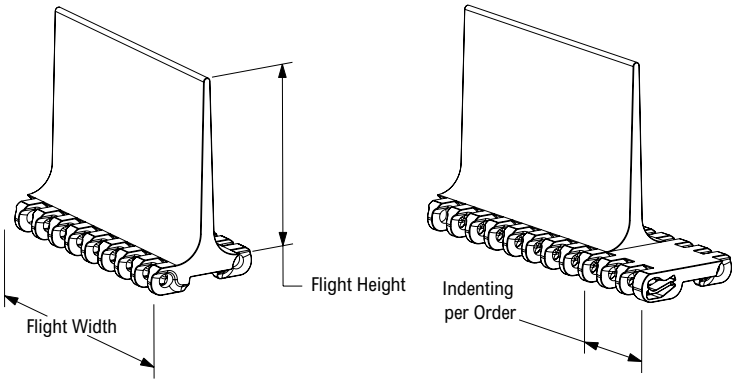

Order example: WSM 2015 K30 F6 T6P N2 CN2 is a 2015 solid top belt in WSM material with a width of 30 in (762 mm) F6 flights located every 6th pitch with a side indent of 2 in (50.8 mm) and a center notch of 2 in (50.8 mm).

See Engineering Manual for back-flex information for belts with flight attachments.

Standard side indents are 1.33in (33.9 mm) and 2.00in (50.8 mm). Other indents at increments of .67in (16.9mm) are available upon request.

Center notches are also available upon request.

Contact Rexnord® FlatTop® engineering for material options.

Curved Flight Attachment (C-Style)

All curved flight attachments are molded 6 in (152.4 mm) wide and in two heights: C6 with a 6 in (152.4 mm) height and C4 with 4 in (101.6 mm) height.

When ordering, please indicate if curved flight attachments are required every pitch, every second pitch, etc.

See page 6 for ordering guidelines.

Order example: WSM 2016 K18 C4 T3P N2 is a 2016 perforated top belt in WSM material with a width of 18 in (457 mm) C4 flights located every 3rd pitch with a side indent of 2 in (50.8 mm).

See Engineering Manual for back-flex information for belts with flight attachments.

Standard side indents are 1.33in (33.9 mm) and 2.00in (50.8 mm). Other indents at increments of .67in (16.9 mm) are available upon request.

Center notches are also available upon request.

Contact Rexnord® FlatTop® engineering for material options.

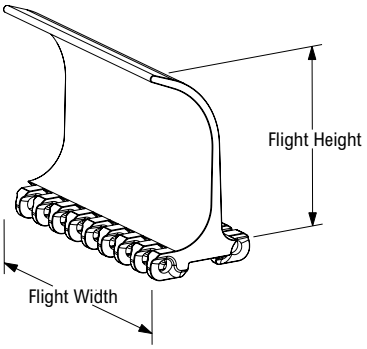

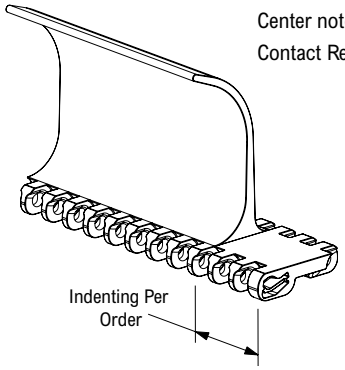

Double Ribbed Curved Flight Attachment (DRC-Style)

All ribbed curved flight attachments are molded 6 in (152.4 mm) wide and in two heights: DRC with a 6 in (152.4 mm) height and DRC with 4 in (101.6 mm) height.

When ordering, please indicate if curved flight attachments are required every pitch, every second pitch, etc.

See page 6 for ordering guidelines.

Order example: WSM 2011 K20 DRC T4P N2.66 is a 2011 nub top belt in WSM material with a width of 20 in (508 mm) DRC flights located every 4th pitch with a side indent of 2.66 in (67.6 mm).

See Engineering Manual for back-flex information for belts with flight attachments.

Standard side indents are 1.33in (33.9 mm) and 2.00in (50.8 mm). Other indents at increments of .67in (16.9 mm) are available upon request.

Center notches are also available upon request.

Contact Rexnord FlatTop engineering for material options.

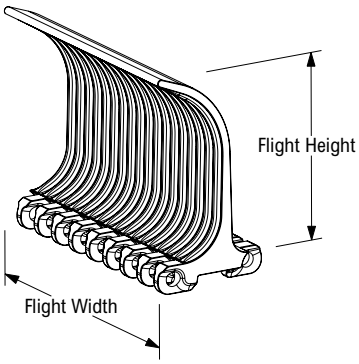

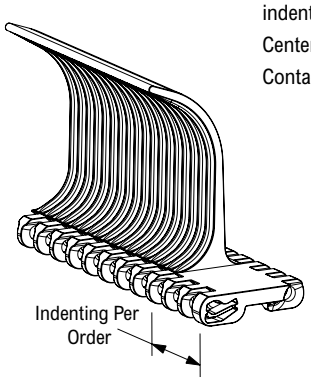

Curved Flight Attachment (B-Style)

All bucket style flight attachments are molded 6 in (152.4 mm) wide and in two heights: B6 with a 6 in (152.4 mm) height and B4 with 4 in (101.6 mm) height.

Center notches are also available upon request.

See page 6 for ordering guidelines.

Order example: WSM 2015-30 B6 T6P N2 is a 2015 solid top belt in WSA material with a width of 30 in (762 mm) B6 flights located every 6th pitch with a side indent of 2 in (50.8 mm)

See engineering manual for back-flex information for belts with flight attachments.

Standard side indent is 2.00in (50.8 mm). Other indents starting at 1.33in (33.9 mm) with increments of .67in (16.9 mm) are available upon request.

When ordering, please indicate if bucket flight attachments are required every pitch, every second pitch, etc.

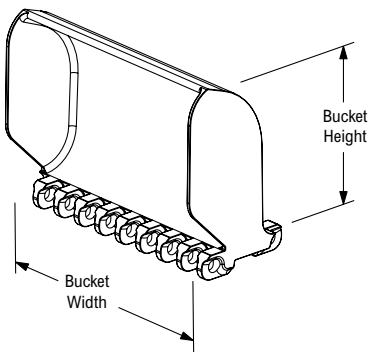

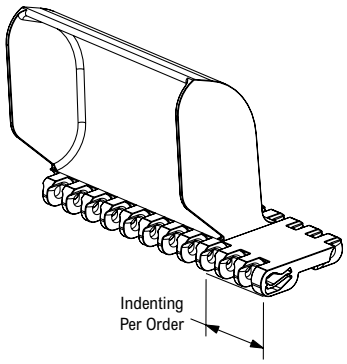

Sideguard Attachment

Standard side indent is 2 in (50.8 mm). Other side indents are 1.33 in (33.9 mm) and 2.66 in (67.7 mm). Other side-indents are available upon request.

SG4 Sideguards are molded 4 in (101.6 mm) high and can be cut down to a minimum height of 1 in (25.4 mm).

If the belt is ordered with sideguards and flights, the sideguard attachments will be furnished at the same height as the flight attachments (up to 4 in (101.6 mm)). All sideguards supplied in WLT or BLT material. Sideguards are situated 1/3 in (8.5 mm) from the flight, reducing the side indent by 2/3 in (16.9 mm).

Example sideguard specification:

WSM, WHT, or WLT link = WLT Sideguard

BLT or BHT link = BLT Sideguard

Example belt specification:

Order example: WSM 2016 K16 F4 T4P SG4 N2.66 is a 2016 perforated top belt in WSM material with a width of 16 in (406 mm) F4; 4 in (102 mm) flights located every 4th pitch (8 in (203.3mm)) side indent of 2.66 in (67.7 mm) from the edge of the belt to the flight. Distance from the edge of the belt to the sideguards is 2 in (50.8 mm).

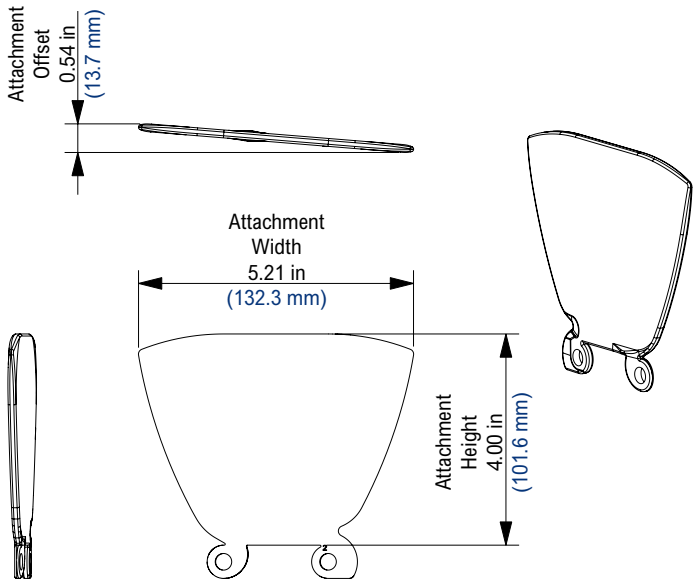

2010 Series ISR Integrated Side Rail Attachment

If the belt is ordered with both ISR and flight attachments, the ISR attachment will be furnished the same height as the flight attachment.

ISR attachments are available with a 2 in. indents only.

The 0.66 inch rail offset creates a fixed dimension of 2.66 inches to the flight attachment.

ISR attachments are molded in 4 in. heights. Standard materials are POM and PP.

Please indicate if ISR attachments are required down one or both sides of the belt when ordering.

Please contact Regal Rexnord™ Corporation if any deviations from this standard are required.

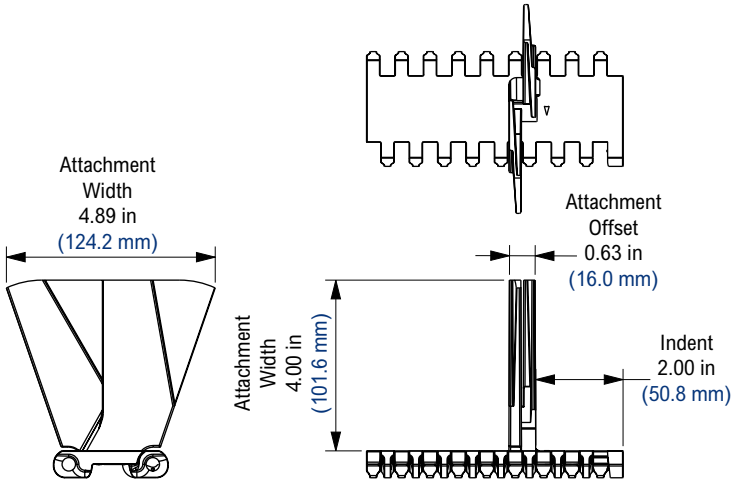

5966



Photo shows 5966 KleanTop® Belt molded in White High Temperature (WHT) material.

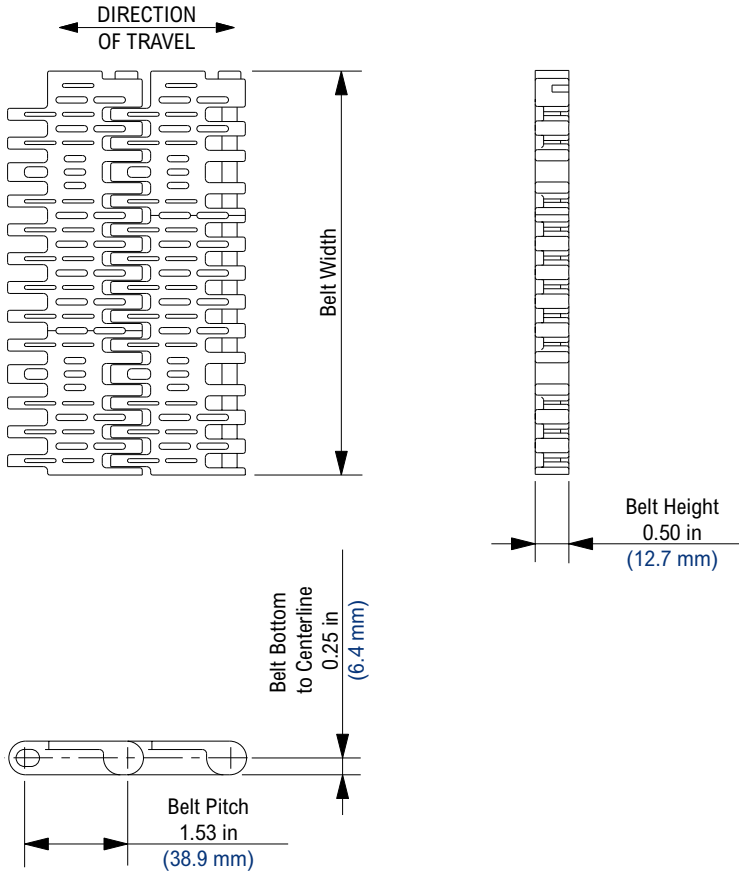

Belt Information

Belt Capacity	Number of Sprockets	
	per ft of width	per m of width
0% - 50%	2	7
50% - 100%	4	13

Available Materials

Prefix	Belt Material	Standard Pin Material	Temperature						Belt Strength		Approximate Weight		FDA Approval
			Fahrenheit			Celsius							
			min	max		min	max						
				dry	wet		dry	wet	lbs/ft	N/m	lbs/ft²	kg/m²	
Standard Materials													
WHT	White High Temperature (PP)	Polypropylene	40	220	212	4	104	100	900	13,131	1.00	4.88	Yes
WLT	White Low Temperature (PE)	Polyethylene	-100	80	80	-73	27	27	600	8,754	1.10	5.37	Yes
Non-Standard Materials													
BLT	Blue Low Temperature (PE)	Polyethylene	-100	80	80	-73	27	27	600	8,754	1.10	5.37	Yes

Additional Notes

Non-Standard products are non-returnable. Minimum order quantity and additional setup charges may also apply.

For belt width information see KleanTop Belt Width Table on page 48.

Open area = 31%.

Stainless steel pins are available on a Mold-To-Order basis.

Belt strength is listed at room temperature.

For additional material information, see material portfolio.

Contact Regal Rexnord™ Customer Service for specific product availability.

N5966 Thermoplastic Sprocket

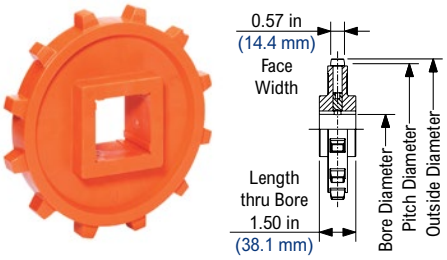

N5966 Thermoplastic Sprocket Imperial Information

Number of Teeth		Pitch Diameter		Outside Diameter		Bore Diameter (Shaft-Ready)											Approximate Weight	
						Hex		Round						Square				
actual	effect	in	mm	in	mm	in											lbs	kg
8	8	4	101.6	4	101.6	-	-	-	-	-	-	-	-	1 1/2	-	-	0.53	0.24
12	12	5.9	150.4	5.9	150.2	1 1/2	2	1	1 3/16	1 1/4	1 7/16	1 1/2	1 15/16	1 1/2	2	2 1/2	0.73	0.33

N5966 Thermoplastic Sprocket Metric Information

Number of Teeth		Pitch Diameter		Outside Diameter		Bore Diameter (Shaft-Ready)							Approximate Weight	
						Round				Square				
actual	effect	in	mm	in	mm	mm							lbs	kg
8	8	4	101.6	4	101.6	-	-	-	-	40.00	-	-	0.53	0.24
12	12	5.9	150.4	5.9	150.2	30.00	35.00	40.00	50.00	40.00	50.00	65.00	0.73	0.33

Shaft-ready round bore sprockets are shipped with keyway and setscrew.

Flight Attachment (F-Style)

All flight attachments are molded 6 in (152.4 mm) wide and can be cut down to a minimum height of 1/4 in (6.35 mm).

The F3 designation represents an F-style flight attachment at a height of 3 in (76.2 mm).

Please indicate if flight attachments are required every pitch, every second pitch, etc. when ordering. Also, indicate if indents are required in the center, on one or both sides of the chain.

For example. "I would like F3 flight attachments every 8th pitch indented 3/4 in on both sides of the chain."

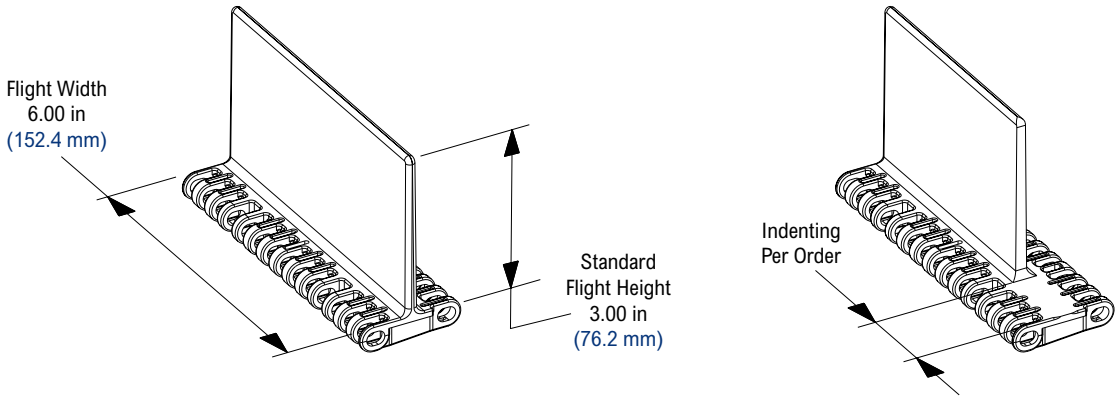

Flight Attachment (DRF-Style)

All flight attachments are molded 6 in (152.4 mm) wide and can be cut down to a minimum height of 1/4 in (6.35 mm).

The F6 designation represents an F-style flight attachment at a height of 6 in (152.4 mm).

Please indicate if flight attachments are required every pitch, every second pitch, etc. when ordering. Also, indicate if indents are required in the center, on one or both sides of the chain.

For example. "I would like F6 flight attachments every 8th pitch indented 3/4 in on both sides of the chain."

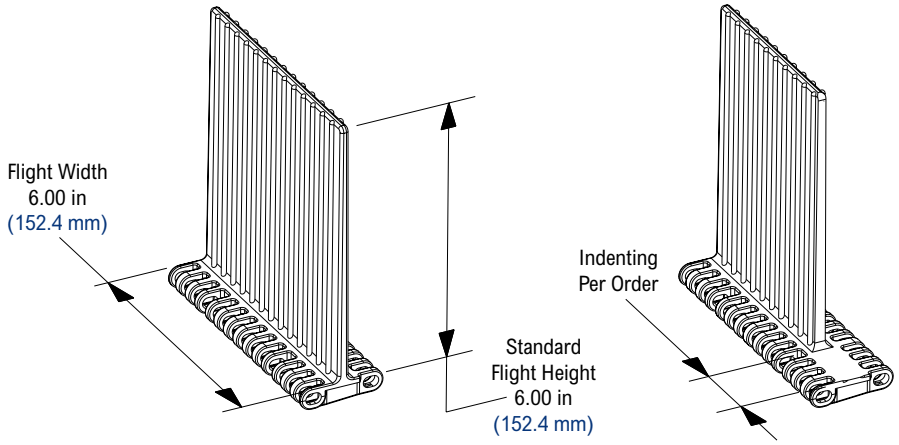

Sideguard Attachment

Please indicate if sideguard attachments are required down one or both sides of the chain when ordering.

Sideguard attachments can be cut down to a minimum height of 1 in (25.4 mm).

If the chain is ordered with both sideguard and flight attachments, the sideguard attachment will be furnished the same height as the flight attachment.

Please contact Regal Rexnord™ if any deviations from this standard are required.

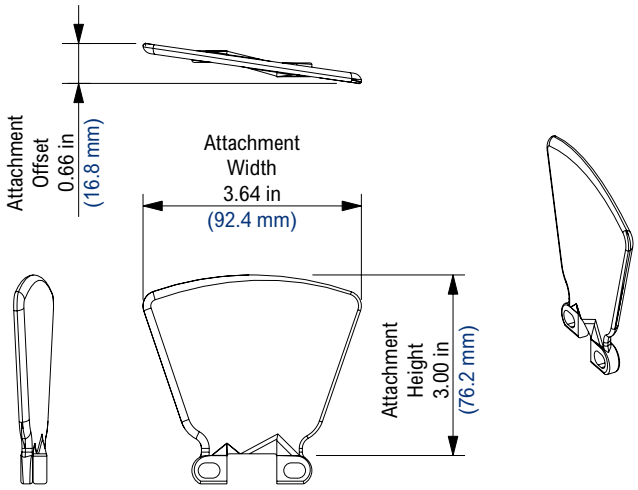

5998 Heavy Duty



Photo shows 5998 HD KleanTop® Belt molded in White High Temperature (WHT) material.

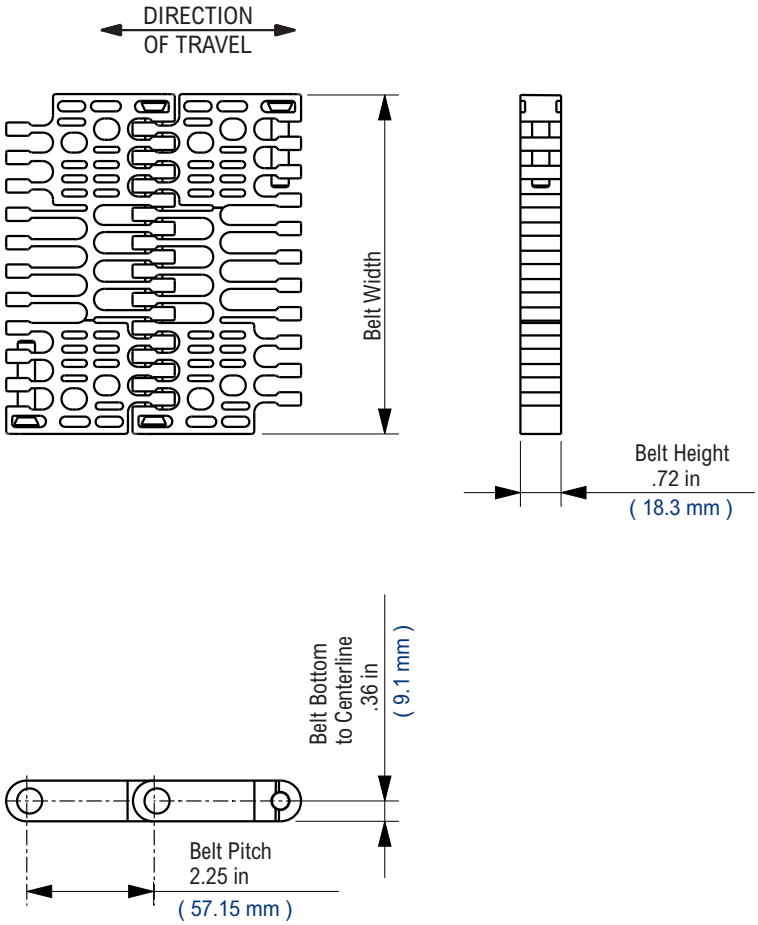

Belt Information

Belt Capacity	Number of Sprockets	
	per ft of width	per m of width
0% - 50%	2	7
50% - 100%	4	13

Available Materials

Prefix	Belt Material	Standard Pin Material	Temperature						Belt Strength		Approximate Weight		FDA Approval
			Fahrenheit			Celsius							
			min	max		min	max						
				dry	wet		dry	wet	lbs/ft	N/m	lbs/ft²	kg/m²	
Standard Materials													
HUV	High Temp. Ultraviolet Resistance	Polypropylene	40	220	180	4	104	82	2,400	35,016	1.70	8.30	No
WHT	White High Temperature (PP)	Polypropylene	40	220	212	4	104	100	2,400	35,016	1.70	8.30	Yes
WLT	White Low Temperature (PE)	Polyethylene	-100	80	80	-73	27	27	1,600	23,344	1.80	8.79	Yes
Non-Standard Materials													
DUV	Plain Acetal Ultraviolet Resistant	Polypropylene	0	180	150	-18	82	66	3,500	51,065	2.30	11.23	No

Additional Notes

Non-Standard products are non-returnable. Minimum order quantity and additional setup charges may also apply.

For belt width information see KleanTop Belt Width Table on page 48.

Open area = 45%.

Stainless steel pins are available on a Mold-To-Order basis.

Belt strength is listed at room temperature.

For additional material information, see material portfolio.

Contact Regal Rexnord™ Customer Service for specific product availability.

5996 Cast Iron Sprocket

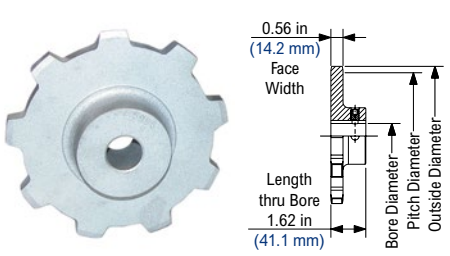

SS5996 Stainless Steel Sprocket

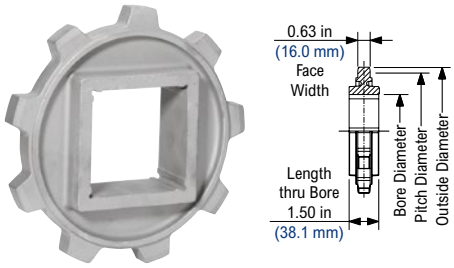

N5996 Thermoplastic Sprocket Molded in Acetal

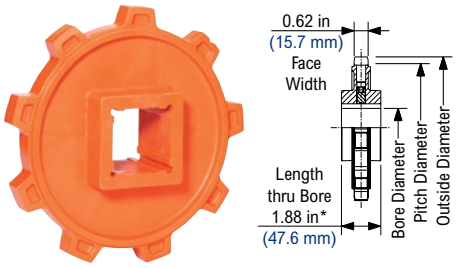

5996 Cast Iron Sprocket Information

Number of Teeth		Pitch Diameter		Outside Diameter		Bore Diameter (Shaft-Ready)								Bore Diameter (Round)				Approximate Weight	
						Round				Square									
						in		mm		in		mm		in		mm			
actual	effect	in	mm	in	mm	min	max	min	max	min	max	min	max	min	max	min	max	lbs	kg
9	9	6.6	167.1	6.5	164.1	1	2	-	-	-	-	-	-	1	2	-	-	4.08	1.85

Shaft-ready round bore sprockets are shipped with keyway and setscrew.

SS5996 Stainless Steel Sprocket Information

Number of Teeth		Pitch Diameter		Outside Diameter		Bore Diameter (Shaft-Ready)				Bore Diameter (Round)				Approximate Weight	
						Round		Square							
actual	effect	in	mm	in	mm	in		mm		in		mm		lbs	kg
9	9	6.6	167.1	6.5	164.1	-		-		2 1/2		-		-		-		4.82	2.19
14	14	10.1	256.8	10	253.5	-		-		2 1/2		-		-		-		7.50	3.40

N5996 Thermoplastic Sprocket Molded in Acetal (POM) — Imperial Information

Number of Teeth		Pitch Diameter		Outside Diameter		Imperial Bore Diameter																	Approximate Weight	
						Hex		Round											Square					
actual	effect	in	mm	in	mm	in		in											in				lbs	kg
7	7	5.2	131.7	4.9	125.5	-	-	-	-	-	-	-	-	-	-	-	-	-	1 1/2	-	-	-	0.49	0.22
9	9	6.6	167.1	6.5	164.1	-	-	1 3/16	1 1/4	1 3/8	1 7/16	1 1/2	1 3/4	1 15/16	2	-	2 7/16	-	1 1/2	2	2 1/2	3 1/2	0.88	0.40
14	14	10.1	256.8	10.1	256.5	2	2 1/2	-	-	-	-	-	-	-	2	2 3/16	-	3 7/16	-	2	2 1/2	3 1/2	1.60	0.73
17	17	12.2	311	12.4	313.9	-	-	-	-	-	-	-	-	-	-	-	-	-	-	-	2 1/2	3 1/2	1.71	0.78

Shaft-ready round bore sprockets are shipped with keyway and setscrew. *17T sprocket length through bore dimensions is 2.25 in (57.2 mm).

N5996 Thermoplastic Sprocket Molded in Acetal (POM) — Metric Information

Number of Teeth		Pitch Diameter		Outside Diameter		Metric Bore Diameter						Approximate Weight	
						Hex		Square					
actual	effect	in	mm	in	mm	mm		mm				lbs	kg
7	7	5.2	131.7	4.9	125.5	-	-	40	-	-	-	0.49	0.22
9	9	6.6	167.1	6.5	164.1	-	-	40	50	65	-	0.88	0.40
14	14	10.1	256.8	10.1	256.5	50	65	40	50	65	90	1.60	0.73

Shaft-ready round bore sprockets are shipped with keyway and setscrew.

NS5996 Thermoplastic Split Sprocket



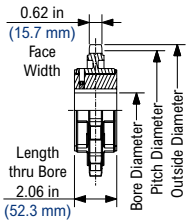

N5996 Thermoplastic Sprocket Molded in HS



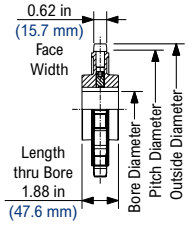

N5996 Thermoplastic Sprocket Molded in PE



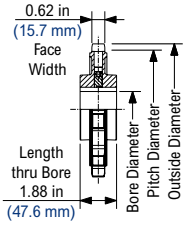

NS5996 Thermoplastic Split Sprocket Information

Number of Teeth		Pitch Diameter		Outside Diameter		Bore Diameter (Shaft-Ready)								Bore Diameter (Idler)				Approximate Weight	
						Round				Square									
		in		mm		in		mm		in		mm		in		mm			
actual	effect	in	mm	in	mm	min	max	min	max	min	max	min	max	min	max	min	max	lbs	kg
9	9	6.6	167.1	6.5	164.1	1	2 5/8	25	70	1	3 1/2*	25	90*	1	2 3/4	25	70	1.68	0.76
12	12	8.7	220.8	8.7	221	1	2 3/4	25	70	1	3 1/2*	25	90*	1	2 3/4	25	70	1.98	0.90
14	14	10.1	256.8	10.0	254.8	1	4 1/2	25	120	1	4 1/2**	25	120**	1	3 1/2	25	90	2.12	0.96

* The 3-1/2 in and 90 mm bores for the 9 and 12 tooth square bore sprockets are supplied as molded bores. All other bores are supplied with split bore adapters.

** The 3-1/2 in, 4-1/2 in, 90 mm and 120 mm bores for the 14 tooth square bore sprockets are supplied as molded bores. All other bores are supplied with split bore adapters.

Imperial shaft-ready round bore sprockets are shipped with keyway and setscrew. Metric shaft-ready round bore sprockets are shipped with keyway and no setscrew. Idler bores are designed to spin freely on the shaft. Similar bore sizes are available with the use of split plastic adapters.

N5996 Thermoplastic Sprocket Molded in HS (Heat Stabilized) — Imperial Information

Number of Teeth		Pitch Diameter		Outside Diameter		Imperial Bore Diameter			Approximate Weight	
						Square				
actual	effect	in	mm	in	mm	in			lbs	kg
9	9	6.6	167.1	6.5	164.1	1 1/2 in	2 in	3 1/2 in	0.88	0.40

Shaft-ready round bore sprockets are shipped with keyway and setscrew.

N5996 Thermoplastic Sprocket Molded in HS (Heat Stabilized) — Metric Information

Number of Teeth		Pitch Diameter		Outside Diameter		Metric Bore Diameter		Approximate Weight	
						Square			
actual	effect	in	mm	in	mm	mm		lbs	kg
9	9	6.6	167.1	6.5	164.1	40	-	0.88	0.40
14	14	10.1	256.8	10.1	256.5	-	90	1.60	0.73

Shaft-ready round bore sprockets are shipped with keyway and setscrew.

N5996 Thermoplastic Sprocket Molded in PE (Polyethylene) — Imperial Information

Number of Teeth		Pitch Diameter		Outside Diameter		Imperial Bore Diameter							Approximate Weight	
						Round			Square					
actual	effect	in	mm	in	mm	in			in				lbs	kg
7	7	5.2	131.7	4.9	125.5	-	-	-	1 1/2	-	-	-	0.38	0.17
9	9	6.6	167.1	6.5	164.1	-	-	-	1 1/2	2	2 1/2	-	0.69	0.31

Shaft-ready round bore sprockets are shipped with keyway and setscrew.

5998 Flight Attachment (F-Style)

All flight attachments are molded 6 in (152.4 mm) wide and can be cut down to a minimum height of 1/4 in (6.35 mm).

The F4 designation represents an F-style flight attachment at a height of 4 in (101.6 mm).

Please indicate if flight attachments are required every pitch, every second pitch, etc. when ordering. Also, indicate if indents are required in the center, on one or both sides of the chain.

For example, "I would like F4 flight attachments every 8th pitch indented 3/4 in on both sides of the chain."

For 5998 chain only.

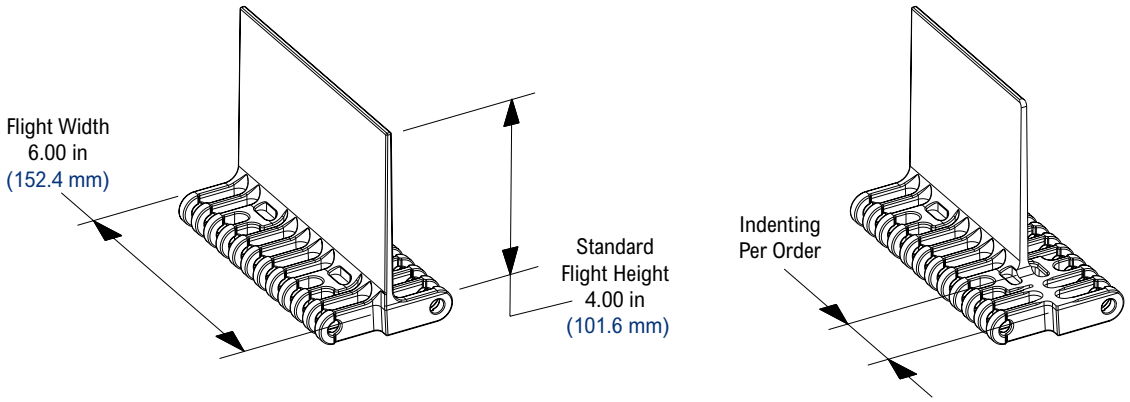

Sideguard Attachment

Please indicate if sideguard attachments are required down one or both sides of the chain when ordering.

Sideguard attachments can be cut down to a minimum height of 1 in (25.4 mm).

If the chain is ordered with both sideguard and flight attachments, the sideguard attachment will be furnished the same height as the flight attachment.

Please contact Regal Rexnord™ if any deviations from this standard are required.

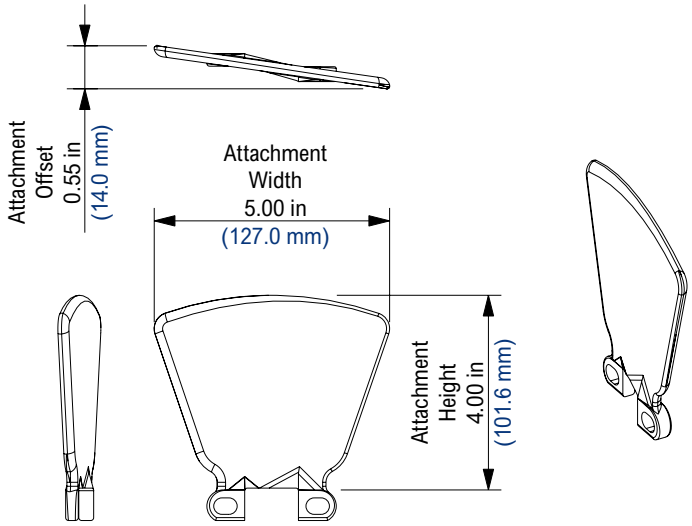

8506

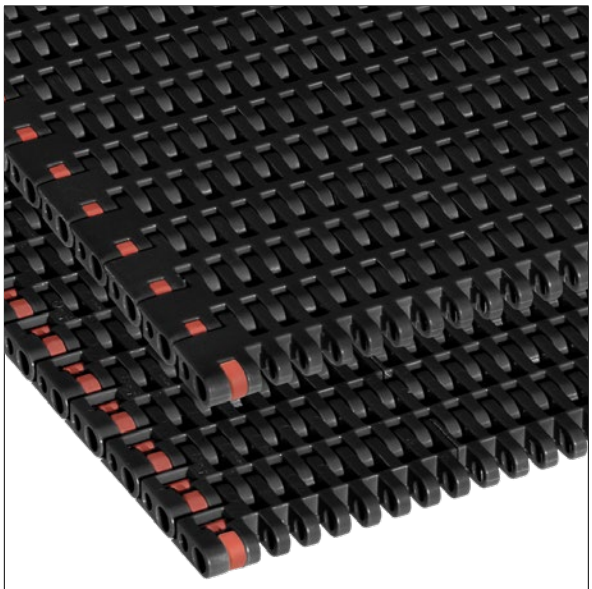

Photo shows 8506 KleanTop® Belt molded in Fryer Temperature Resistant (FTR) material.

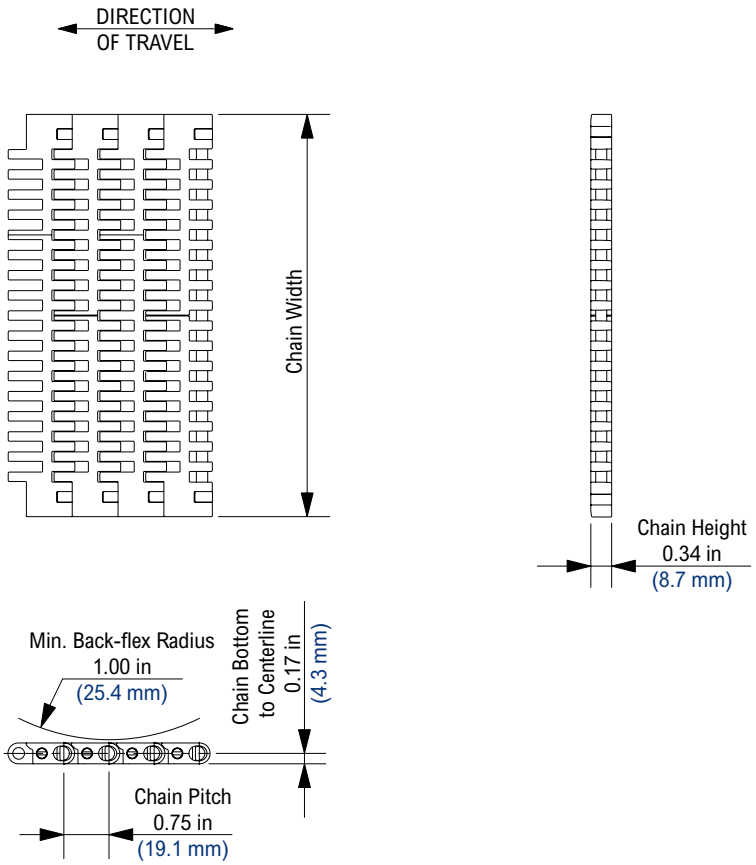

Belt Information

Belt Capacity	Number of Sprockets	
	per ft of width	per m of width
0% - 25%	2	7
25% - 75%	4	13
75% - 100%	6	20

Available Materials

Prefix	Belt Material	Standard Pin Material	Temperature						Belt Strength		Approximate Weight		FDA Approval
			Fahrenheit			Celsius							
			min	max		min	max						
				dry	wet		dry	wet	lbs/ft	N/m	lbs/ft²	kg/m²	
Standard Materials													
FTR	Fryer Temperature Resistant (PA)	Polyester	-80	220	NR	-62	104	NR	2,000	29,180	1.61	7.86	Yes

Additional Notes

For belt width information see KleanTop Belt Width Table on page 48.

Open area = 21.0%.

Stainless steel pins are available on a Mold-To-Order basis.

NR = Not Recommended.

Belt strength is listed at room temperature.

For additional material information, see material portfolio.

Contact Regal Rexnord™ Customer Service for specific product availability.

SSS8500 Stainless Steel Split Sprocket

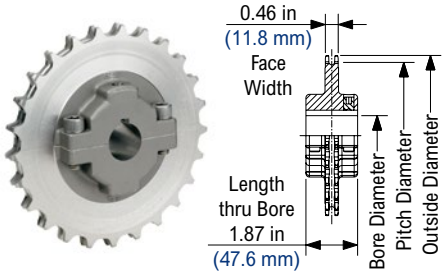

KU8500 Thermoplastic Sprocket

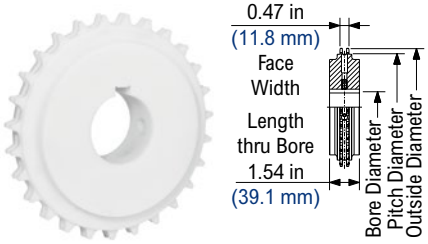

KU8500 Thermoplastic "H-Style" Sprocket

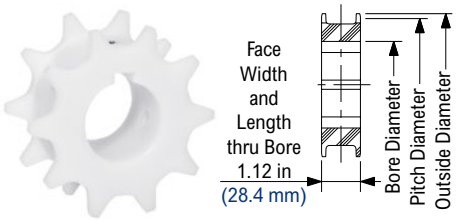

SSS8500 Stainless Steel Split Sprocket Information

Number of Teeth		Pitch Diameter		Outside Diameter		Bore Diameter (Shaft-Ready)								Bore Diameter (Round)				Approximate Weight	
						Round				Square									
		in		mm		in		mm		in		mm		in		mm			
actual	effect	in	mm	in	mm	min	max	min	max	min	max	min	max	min	max	min	max	lbs	kg
24	24	5.8	147.3	5.8	148.3	1	1 1/2	25	40	1	1	25	25	1	2	25	50	4.77	2.16
25	25	6	153.4	6.1	154.7	1	1 1/2	25	40	1	1	25	25	1	2	25	50	4.97	2.25
27	27	6.5	165.6	6.6	166.9	1	2 1/2	25	60	1	3 1/2	25	90	1	3 1/2	25	90	5.20	2.36

Shaft-ready round bore sprockets are shipped with keyway and no setscrew.

* The 3-1/2 in and 90 mm bores for the 27 tooth square bore sprocket and all round bore sprockets above 1-1/2 in (40 mm) are supplied as machined bores. All other bores are supplied with split bore adapters.

KU8500 Thermoplastic Sprocket Information

Number of Teeth		Pitch Diameter		Outside Diameter		Bore Diameter (Shaft-Ready)								Bore Diameter (Idler)				Approximate Weight		FDA Approval
						Round				Square										
		in		mm		in		mm		in		mm		in		mm				
actual	effect	in	mm	in	mm	min	max	min	max	min	max	min	max	min	max	min	max	lbs	kg	
10	10	2.5	62.2	2.4	61.5	3/4	1	25	25	1	1	25	25	3/4	1	25	25	0.28	0.13	Yes
14	14	3.4	86.4	3.4	86.4	1	1 1/4	25	30	1	1 1/2	25	40	1	1 1/4	25	30	0.17	0.08	Yes
17	17	4.1	104.7	4.2	105.4	1	1 1/2	25	40	1	1 1/2	25	40	1	1 1/2	25	40	0.38	0.17	Yes
21	21	5.1	129	5.1	130	1	2 1/2	25	65	1	2 1/2	25	65	1	2 1/2	25	65	0.59	0.27	Yes
24	24	5.8	147.3	5.8	148.3	1	3 3/8	25	85	1	2 3/4	25	70	1	3 1/2	25	65	0.69	0.31	Yes
25	25	6	153.4	6.1	154.7	1	3 3/4	25	95	1	3	25	75	1	4	25	75	0.75	0.34	Yes
27	27	6.5	165.6	6.6	166.9	1	3 3/4	25	95	1	3	25	75	1	4	25	75	0.80	0.36	Yes
28	28	6.8	171.7	6.8	173	1	3 3/4	25	95	1	3	25	75	1	4	25	75	0.85	0.39	Yes

Shaft-ready round bore sprockets are shipped with keyway and no setscrew. Idler bores are designed to spin freely on the shaft. 10 tooth sprocket has a Length thru Bore of 1.38 in (35.1 mm).

KU8500 Thermoplastic "H-Style" Sprocket Information

Number of Teeth		Pitch Diameter		Outside Diameter		Bore Diameter (Shaft-Ready)								Bore Diameter (Idler)				Approximate Weight		FDA Approval
						Round				Square										
		in		mm		in		mm		in		mm		in		mm				
actual	effect	in	mm	in	mm	min	max	min	max	min	max	min	max	min	max	min	max	lbs	kg	
14	14	3.4	86.4	3.4	86.4	1	1 1/4	25	30	1	1 1/2	25	40	1	1 1/4	25	30	0.17	0.08	Yes
17	17	4.1	104.7	4.2	105.4	1	1 1/2	25	40	1	2	25	50	1	1 1/2	25	40	0.34	0.15	Yes
25	25	6	153.4	6.1	154.7	1	3	25	75	1	3	25	80	1	2 1/2	25	65	0.97	0.44	Yes

Shaft-ready round bore sprockets are shipped with keyway and no setscrew. Idler bores are designed to spin freely on the shaft.

NS8500 Thermoplastic Split Sprocket

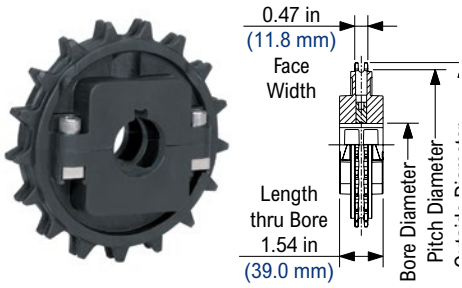

NS8500 Thermoplastic Split Sprocket Information

Number of Teeth		Pitch Diameter		Outside Diameter		Bore Diameter (Shaft-Ready)								Bore Diameter (Idler)				Approximate Weight	
						Round				Square									
		in		mm		in		mm		in		mm		in		mm			
actual	effect	in	mm	in	mm	min	max	min	max	min	max	min	max	min	max	min	max	lbs	kg
17	17	4.1	104.7	4.2	105.4	1	1 1/2	25	40	1	1 1/2	25	40	1	1 1/2	25	40	0.48	0.22
21	21	5.1	129	5.1	130	1	2	25	50	1	2	25	50	1	2	25	50	0.58	0.26
24	24	5.8	147.3	5.8	148.3	1	2 1/2	25	65	1	2 1/2	25	65	1	2 1/2	25	65	0.68	0.31
25	25	6	153.4	6.1	154.7	1	2 1/2	25	65	1	2 1/2	25	65	1	2 1/2	25	65	0.78	0.35
27	27	6.5	165.6	6.6	166.9	1	2 5/8	25	65	1	2 1/2	25	65	1	3	25	75	1.18	0.54

Imperial shaft-ready round bore sprockets are shipped with keyway and setscrew. Metric shaft-ready round bore sprockets are shipped with keyway and no setscrew. Idler bores are designed to spin freely on the shaft.

Flight Attachment (F-Style)

All flight attachments are molded 6 in (152.4 mm) wide.

The F3 designation represents an F-style flight attachment at a height of 3 in (76.2 mm) that can be cut down to a minimum height of 1/4 in (6.35 mm).

If chain is to have flights and sideguards, flights must be spaced on even pitch increments.

Please indicate if flight attachments are required every pitch, every second pitch, etc. when ordering. Also, indicate if indents are required in the center, on one or both sides of the chain.

For example. "I would like F3 flight attachments every 8th pitch indented 3/4 in on both sides of the chain."

Note: Not offered with 8505 Metric chain.

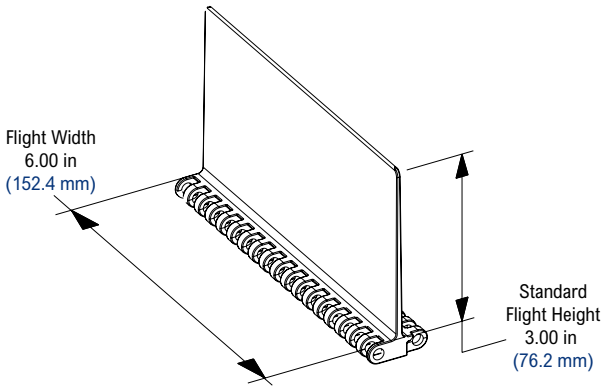

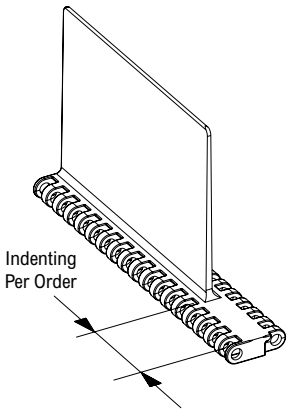

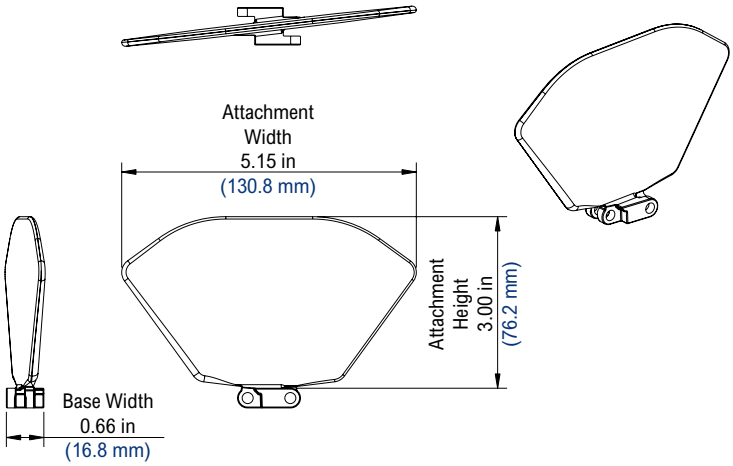

Sideguard Attachment

Please indicate if sideguard attachments are required down one or both sides of the chain when ordering.

Available sideguard indents are either 1.50 in (38.1 mm) or 2.25 in (57.2 mm) only.

Sideguard attachments can be cut down to a minimum height of 1 in (25.4 mm).

If the chain is ordered with both sideguard and flight attachments, the sideguard attachment will be furnished the **same height** as the flight attachment.

If chain is to have flights and sideguards, flights must be spaced on even pitch increments.

Please contact if any deviations from this standard are required.

Note: Not offered with 8505 Metric chain.

KleanTop® Belt Width Table (Standard Vs Nonstandard)

Belt Series	Standard (uncut)				Nonstandard (cut)				Accessories				
	Minimum Belt Width		Belt Width Increment		Minimum Belt Width		Belt Width Increment		Flights	Curved Flights	Buckets	Sideguards	Hold Down TAB's
	(in)	(mm)	(in)	(mm)	(in)	(mm)	(in)	(mm)					
395	6	152.4	2	50.8	-----	-----	-----	-----					
595	6	152.4	6	152.4	4	101.6	0.5						
596	6	152.4	6	152.4	4	101.6	0.5						
1011	6	152.4	-----	-----	2	50.8	1	25.4	■			■	
1015	6	152.4	-----	-----	2	50.8	1	25.4	■			■	
1016	6	152.4	-----	-----	2	50.8	1	25.4	■			■	
1018	6	152.4	-----	-----	2	50.8	1	25.4	■			■	
1095	6	152.4	6	152.4	4	101.6	0.5	12.7	■			■	
1096	6	152.4	6	152.4	4	101.6	0.5	12.7	■			■	
1255	10.04	255	3.35	85	4.69	119	0.67	17					RB, RBP, RBT
1255 SuperGrip	10.04	255	3.35	85	8.03	204	0.67	17					
1275	13.39	340	3.35	85	10.04	255	0.67	17					
1654	6	152.4	2	50.8	6	152.4	0.5	12.7					RB
1655	6	152.4	2	50.8	6	152.4	0.5	12.7					RB, RBT
1655 RT	6	152.4	2	50.8	6	152.4	0.5	12.7					
1675	6	152.4	2	50.8	6	152.4	0.5	12.7					
2011	8	203.2	2	50.8	6	152.4	2/3	16.93	■	■	■	■	
2015	6	152.4	2	50.8	4 2/3	118.53	2/3	16.93	■	■	■	■	
2016	8	203.2	2	50.8	6	152.4	2/3	16.93	■	■	■	■	
5966	18	457.2	6	152.4	4-11/16 in (3 in possible)		Contact Regal Rexnord™ Engineering		■			■	
5998 HD	18	457.2	6	152.4	5	127	0.5	12.7	■			■	
8506	9	228.6	3	76.2	2-2/3	67.7	1/3	8.5	■			■	

* Actual Belt Width = Effective (or Nominal) Belt Width (Multiples of 3 in (76.2 mm)) + 0.75 in (19.0 mm)

KleanTop® Sprocket and Shaftdrop

Sprocket and Wearstrip Location with Non-Raised-Rib Belts:

- The distance from the end of the wearstrip to the sprocket shaft centerline should equal dimension "C" (one belt pitch); otherwise, the wearstrip will interfere with the free articulation of the belt as it enters the sprocket
- The leading edges of the wearstrip should be beveled
- The following formulas and dimensions used in conjunction with the figure will give the proper shaft and wearstrip positioning

Sprocket Location For Conventional Belts:

A = (Pitch Diameter/2) - E

C = One Belt Pitch (see table below)

"C" equals one belt pitch which ensures support under belt at all times.

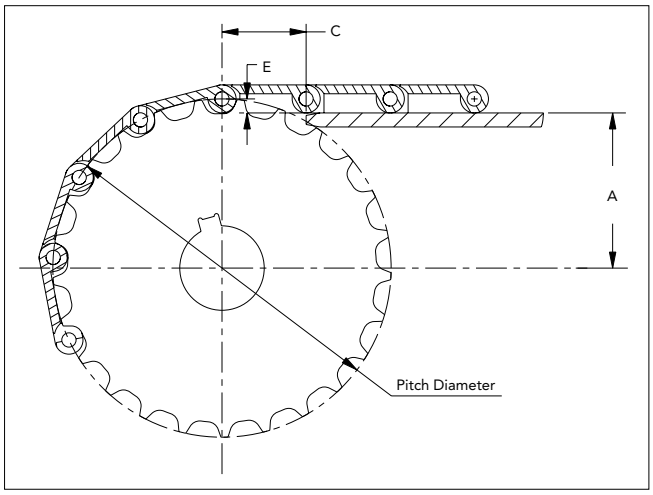

Dimensions apply for both head and tail shafts

Shaft Drop Values for Conventional Chain

Belt Series	Chain Number	C Dimension		E Dimension	
		(in)	(mm)	(in)	(mm)
390	395	0.315	8.0	0.118	3.0
590	595/596	0.50	12.7	0.188	4.78
1010	1011/1015/1016/1018	1.00	25.4	0.200	5.08
1090	1095/1096	1.00	25.4	0.188	4.78
1200	1255/1275	1.25	31.8	0.250	6.35
1600	1654/1655/1655RT/1675	1.00	25.4	0.250	6.35
2010	2011/2015/2016	2.00	50.8	0.320	8.00
5966	5966	1.50	38.1	0.250	6.35
5990	5998HD	2.25	57.2	0.360	9.14
8500	8506	0.75	19.1	0.170	4.32

Example:

For a 5996 belt utilizing a 14T sprocket:

A = (Pitch Diameter/2) - E
= (10.111 in/2) - 0.360 in = 4.696 in

C = 2.25 in

Metric:

A = (Pitch Diameter/2) - E
= (256.82mm/2) - 9.14mm = 119.27mm

C = 57.1mm

Tolerances:

A = +.03 in / -.00 in (+.8mm / -.0mm)

C = +.25 in / -.00 in (+6.3mm / -.0mm)

CAUTION *Above values are good only for sprockets mounted between support tracks. For sprockets mounted in line with support tracks:*

$$C = \sqrt{\left(\frac{O.D.}{2}\right)^2 - (A-t)^2} + 0.125$$

A = (Pitch Diameter/2) - E

O.D. = Outside Diameter of Sprockets

t = Wearstrip Thickness

- Wearstrips in line with sprockets can also be angled back on the bottom for more clearance



All Rexnord® KleanTop® Belt is formed or molded from the highest quality materials available. From low friction to high temperature, we offer the widest selection of materials specifically tailored around the needs of our customers. We are committed to ongoing research and development allowing us to adapt to our customers and their demanding application requirements.

Rexnord KleanTop Materials

MATERIAL INDEX

Material Prefix	Description	Page	Primary Components	FDA Approved
BHT	Blue High Temperature	51	Polypropylene (PP)	Yes
BLT	Blue Low Temperature	55	Polyethylene (HDPE)	Yes
DUV	Acetal Ultraviolet Resistant	52	Ultraviolet resistant acetal (POM)	No
FTR	Fryer Temperature Resistant	53	Fryer Temperature Resistant Nylon (PA).	Yes
HUV	High Temperature Ultraviolet Resistant	54	Ultraviolet resistant polypropylene (PP)	No
SMB	Blue Cut Resistant	56	Cut and abrasive wear resistant acetal (POM)	Yes
WHT	White High Temperature	51	Polypropylene (PP)	Yes
WLT	White Low Temperature	55	Polyethylene (HDPE)	Yes
WSM	White Cut Resistant	56	Cut and abrasive wear resistant acetal (POM)	Yes

BHT

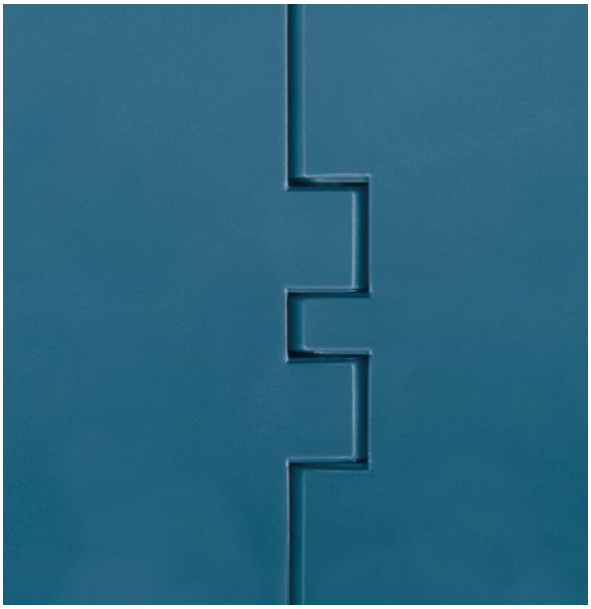

WHT



Brief Description

Formulated to be used in both high temperature and general applications in both dry and wet conditions. A good general purpose conveyor chain material and in addition has excellent resistance to chemicals including salts, alcohol, bases and many acids.

Primary Components

Polypropylene (PP)

General Information

Prefix	Material	Temperature						FDA Approval
		Fahrenheit			Celsius			
		min	max		min	max		
			dry	wet		dry	wet	
WHT	White High Temperature	40	220	212	4	104	100	Yes
BHT	Blue High Temperature	40	220	212	4	104	100	Yes

Friction Factors Between Material and Product

Operating Condition	Product Material						
	Aluminum	Returnable Glass Bottles**	Non-Returnable Glass Bottles	Paper	Plastic (crates, shrink wrap, etc)	PET	Steel
Dry	0.29	0.29	0.24	0.35	0.32	0.28	0.31
Water	0.19	0.21	0.18	NR	0.24	0.20	0.25
Soap and Water	0.15	0.14	0.10	NR	0.19	0.15	0.17
Oil	---	---	---	NR	---	---	0.10

Friction Factors Between Material and Wearstrips

Operating Condition	Wearstrip Material			
	Carbon and Stainless Steel	UHMWPE	Nylatron‡	ULF
Dry	0.35	0.30	0.30	0.26
Water	0.30	0.25	0.25	0.22
Soap and Water	0.25	0.20	0.20	0.19
Oil	0.10	0.10	0.10	0.10

1. Buoyant in water.

Regulatory Information

The Food and Drug Administration (FDA) accepts certain materials for direct food contact. FDA approved material is compliant to

FDA 21 CFR § 177.

‡Nylatron® is a registered trademark of Quadrant Engineering Plastics Products.

All rights reserved.

NR denotes "not recommended", Dash denotes "combination not tested"

**Friction of returnable bottles will vary depending on the quality of the glass, the amount of roughed-up surface, etc.

DUV



Brief Description

Formulated to reduce or eliminate material degradation in applications where ultraviolet radiation exposure is a concern. Retains its mechanical integrity when exposed to direct sunlight (outdoor applications) as well as in applications that use ultraviolet radiation to run a process. Has the same strength and wear properties as plain acetal material.

Primary Components

Ultraviolet resistant acetal (POM)

General Information

Prefix	Material	Temperature						FDA Approval
		Fahrenheit			Celsius			
		min	max		min	max		
			dry	wet		dry	wet	
DUV	Acetal Ultraviolet Resistant (Black)	0	180	150	-18	82	66	No

Friction Factors Between Material and Product

Operating Condition	Product Material						
	Aluminum	Returnable Glass Bottles**	Non-Returnable Glass Bottles	Paper	Plastic (crates, shrink wrap, etc)	PET	Steel
Dry	0.25	0.27	0.20	0.33	0.25	0.25	0.30
Water	0.17	0.18	0.15	NR	0.20	0.20	0.22
Soap and Water	0.12	0.14	0.10	NR	0.15	0.15	0.15
Oil	---	---	---	NR	---	---	0.10

Friction Factors Between Material and Wearstrips

Operating Condition	Wearstrip Material			
	Carbon and Stainless Steel	UHMWPE	Nylatron‡	ULF
Dry	0.30	0.25	0.25	0.20
Water	0.23	0.21	0.21	0.18
Soap and Water	0.15	0.15	0.15	0.15
Oil	0.10	0.10	0.10	0.10

Regulatory Information

‡Nylatron® is a registered trademark of Quadrant Engineering Plastics Products.

All rights reserved.

NR denotes "not recommended", Dash denotes "combination not tested"

**Friction of returnable bottles will vary depending on the quality of the glass, the amount of roughed-up surface, etc.

FTR



Brief Description

Formulated to be used in oven / fryer discharge conveyor applications where the chain is exposed to high temperatures. Can resist contact temperatures up to 350ºF (177ºC). Used to convey high temperature products such as chips.

Primary Components

Fryer temperature resistant nylon (PA)

General Information

Prefix	Material	Temperature						FDA Approval
		Fahrenheit			Celsius			
		min	max		min	max		
			dry	wet		dry	wet	
FTR	Fryer Temperature Resistant (Black)	-80	220	NR	-62	104	NR	Yes

Friction Factors Between Material and Product

Operating Condition	Product Material						
	Aluminum	Returnable Glass Bottles**	Non-Returnable Glass Bottles	Paper	Plastic (crates, shrink wrap, etc)	PET	Steel
Dry	0.25	0.27	0.20	0.33	0.25	0.25	0.30
Water	NR	NR	NR	NR	NR	NR	NR
Soap and Water	NR	NR	NR	NR	NR	NR	NR
Oil	NR	NR	NR	NR	NR	NR	NR

Friction Factors Between Material and Wearstrips

Operating Condition	Wearstrip Material			
	Carbon and Stainless Steel	UHMWPE	Nylatron‡	ULF
Dry	0.30	0.28	0.28	0.25
Water	NR	NR	NR	NR
Soap and Water	NR	NR	NR	NR
Oil	0.10	0.10	0.10	0.10

Regulatory Information

The Food and Drug Administration (FDA) accepts certain materials for direct food contact. FDA approved material is compliant to FDA 21 CFR § 177.

‡Nylatron® is a registered trademark of Quadrant Engineering Plastics Products.

All rights reserved.

NR denotes "not recommended", Dash denotes "combination not tested"

**Friction of returnable bottles will vary depending on the quality of the glass, the amount of roughed-up surface, etc.

HUV



Brief Description

Formulated to reduce or eliminate material degradation in applications where ultraviolet radiation exposure is a concern. Retains its mechanical integrity when exposed to direct sunlight (outdoor applications) as well as in applications that use ultraviolet radiation to run a process. Has excellent resistance to chemicals including salts, alcohol, bases and many acids.

Primary Components

Polypropylene (PP)

General Information

Prefix	Material	Temperature						FDA Approval
		Fahrenheit			Celsius			
		min	max		min	max		
			dry	wet		dry	wet	
HUV	High Temperature Ultraviolet Resistant (Black)	40	220	180	4	104	82	No

Friction Factors Between Material and Product

Operating Condition	Product Material						
	Aluminum	Returnable Glass Bottles**	Non-Returnable Glass Bottles	Paper	Plastic (crates, shrink wrap, etc)	PET	Steel
Dry	0.28	0.29	0.22	0.35	0.30	0.30	0.35
Water	0.19	0.21	0.17	NR	0.25	0.25	0.25
Soap and Water	0.16	0.14	0.10	NR	0.20	0.20	0.20
Oil	---	---	---	NR	---	---	0.10

Friction Factors Between Material and Wearstrips

Operating Condition	Wearstrip Material			
	Carbon and Stainless Steel	UHMWPE	Nylatron‡	ULF
Dry	0.35	0.30	0.30	0.26
Water	0.24	0.16	0.16	0.22
Soap and Water	0.20	0.20	0.20	0.19
Oil	0.10	0.10	0.10	0.10

1. Buoyant in water.

Regulatory Information

‡Nylatron® is a registered trademark of Quadrant Engineering Plastics Products.

All rights reserved.

NR denotes "not recommended", Dash denotes "combination not tested"

**Friction of returnable bottles will vary depending on the quality of the glass, the amount of roughed-up surface, etc.

WLT

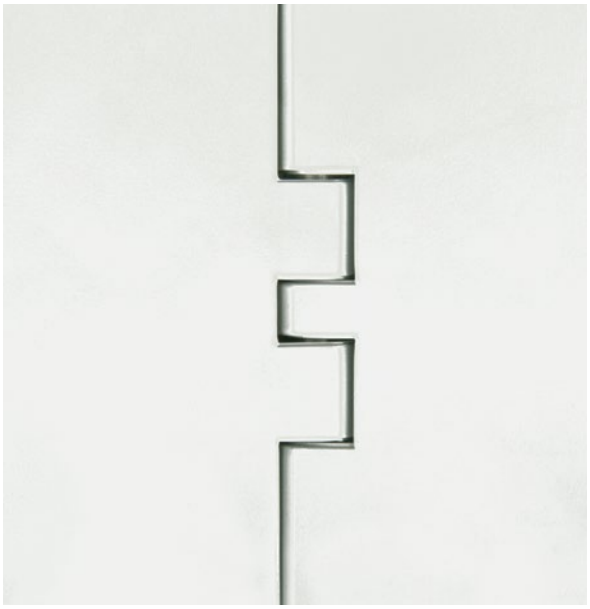

BLT



Brief Description

Formulated to retain toughness, impact strength and ductility in both dry and wet conditions. Retains its properties in temperatures as low as -100 °F (-73 °C). Has excellent impact resistance, and because of its inherent ductility, is excellent in applications where other materials may chip or fracture. Is also chemical resistant to most bleaches, bases, acids and hydrocarbons.

Primary Components

Polyethylene (HDPE)

General Information

Prefix	Material	Temperature						FDA Approval
		Fahrenheit			Celsius			
		min	max		min	max		
			dry	wet		dry	wet	
WLT	White Low Temperature	-100	80	80	-73	27	27	Yes
BLT	Blue Low Temperature	-100	80	80	-73	27	27	Yes

Friction Factors Between Material and Product

Operating Condition	Product Material						
	Aluminum	Returnable Glass Bottles**	Non-Returnable Glass Bottles	Paper	Plastic (crates, shrink wrap, etc)	PET	Steel
Dry	0.22	0.24	0.18	0.30	0.22	0.22	0.28
Water	0.17	0.17	0.14	NR	0.18	0.18	0.22
Soap and Water	0.12	0.14	0.10	NR	0.15	0.15	0.15
Oil	---	---	---	NR	---	---	0.10

Friction Factors Between Material and Wearstrips

Operating Condition	Wearstrip Material			
	Carbon and Stainless Steel	UHMWPE	Nylatron‡	ULF
Dry	0.28	0.23	0.23	0.21
Water	0.22	0.20	0.20	0.19
Soap and Water	0.15	0.15	0.15	0.14
Oil	0.10	0.10	0.10	0.10

1. Buoyant in water.

Regulatory Information

The Food and Drug Administration (FDA) accepts certain materials for direct food contact. FDA approved material is compliant to FDA 21 CFR § 177.

‡*Nylatron® is a registered trademark of Quadrant Engineering Plastics Products.*

All rights reserved.

NR denotes "not recommended", Dash denotes "combination not tested"

**Friction of returnable bottles will vary depending on the quality of the glass, the amount of roughed-up surface, etc.

WSM

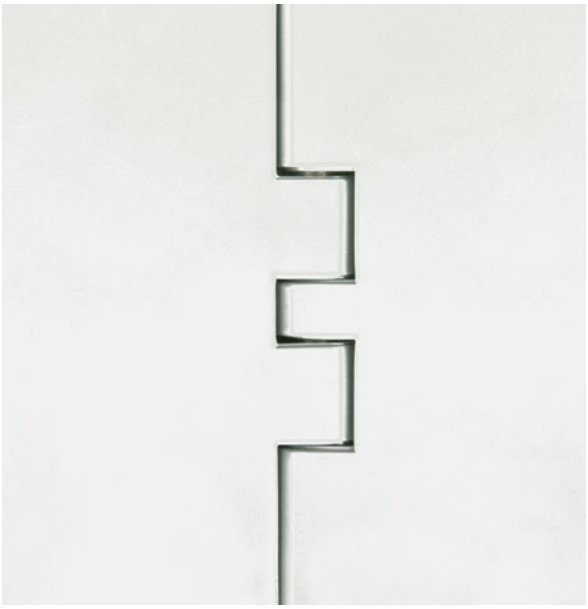

SMB



Brief Description

Formulated to be used in applications when superior wear and cut resistance is required. Can be used in both dry and wet conditions and in applications where abrasive wear due to products or environment is a concern. Cut resistant materials are commonly used in the meat processing industry on cutting, boning and trimming lines. Has good impact resistance and is as strong as standard acetal materials.

Primary Components

Cut and abrasive wear resistant acetal (POM)

General Information

Prefix	Material	Temperature						FDA Approval
		Fahrenheit			Celsius			
		min	max		min	max		
			dry	wet		dry	wet	
WSM	White Cut Resistant	-40	180	150	-40	82	66	Yes
SMB	Blue Cut Resistant	-40	180	150	-40	82	66	Yes

Friction Factors Between Material and Product

Operating Condition	Product Material						
	Aluminum	Returnable Glass Bottles**	Non-Returnable Glass Bottles	Paper	Plastic (crates, shrink wrap, etc)	PET	Steel
Dry	0.25	0.27	0.20	0.33	0.25	0.25	0.30
Water	0.17	0.18	0.15	NR	0.20	0.20	0.22
Soap and Water	0.12	0.14	0.10	NR	0.15	0.15	0.15
Oil	---	---	---	NR	---	---	0.10

Friction Factors Between Material and Wearstrips

Operating Condition	Wearstrip Material			
	Carbon and Stainless Steel	UHMWPE	Nylatron‡	ULF
Dry	0.30	0.25	0.25	0.20
Water	0.23	0.21	0.21	0.18
Soap and Water	0.15	0.15	0.15	0.15
Oil	0.10	0.10	0.10	0.10

Regulatory Information

The Food and Drug Administration (FDA) accepts certain materials for direct food contact. FDA approved material is compliant to FDA 21 CFR § 177.

‡*Nylatron® is a registered trademark of Quadrant Engineering Plastics Products.*

All rights reserved.

NR denotes "not recommended", Dash denotes "combination not tested"

**Friction of returnable bottles will vary depending on the quality of the glass, the amount of roughed-up surface, etc.

Please contact Regal Rexnord™ Application Engineering for assistance with product selection or visit regalrexnord.com

Please contact Regal Rexnord™ Application Engineering for assistance with product selection or visit regalrexnord.com

Please contact Regal Rexnord™ Application Engineering for assistance with product selection or visit regalrexnord.com

PRODUCT CATALOG



REXNORD

Motion Control Solutions
Regal Rexnord

Contact us: rexnord.com/contact

regalrexnord.com

The proper selection and application of products and components, including assuring that the product is safe for its intended use, are the responsibility of the customer. To view our Application Considerations, please visit https://www.regalrexnord.com/Application-Considerations.

To view our Standard Terms and Conditions of Sale, please visit https://www.regalrexnord.com/Terms-and-Conditions-of-Sale (which may redirect to other website locations based on product family).

"Regal Rexnord" is not indicative of legal entity.

Regal Rexnord and KleanTop are trademarks of Regal Rexnord Corporation or one of its affiliated companies.

© 2018, 2022 Regal Rexnord Corporation, All Rights Reserved.
MCC21019E • Form# FT2-003E

RegalRexnord™