Hammond Power Solutions Inc.

| NO. | DATE | BY | REVISION |
|---|---|---|---|
| | | | |

TITLE: 3PH AUTO TRANSFORMER NAMEPLATE INFORMATION

DES: RBHATIA
DATE: 13/07/02
SCALE: NTS

SHEET 1 OF 2

EDB 2909D.5

0.1 rbhatia 2013/07/04 09:06

THREE PHASE MOTOR STARTING AUTO TRANSFORMER

Hammond Power Solutions Inc.

GUELPH, ONT. BARABOO, WI
COMPTON, CA MONTERREY, MX

| | | | | | |
|---|---|---|---|---|---|
| HP | 50 | | VOLTAGE | 600 V | |
| TEMP CLASS | 200 | Hz 60 | % TAPS | 50–65–80 | |
| CAT. NO. | 2909D.5 | | NEMA | MEDIUM | DUTY |
| S/N | | | | | |

LR3902 ® TYPE J

® E61431

m003000n

2909D.5

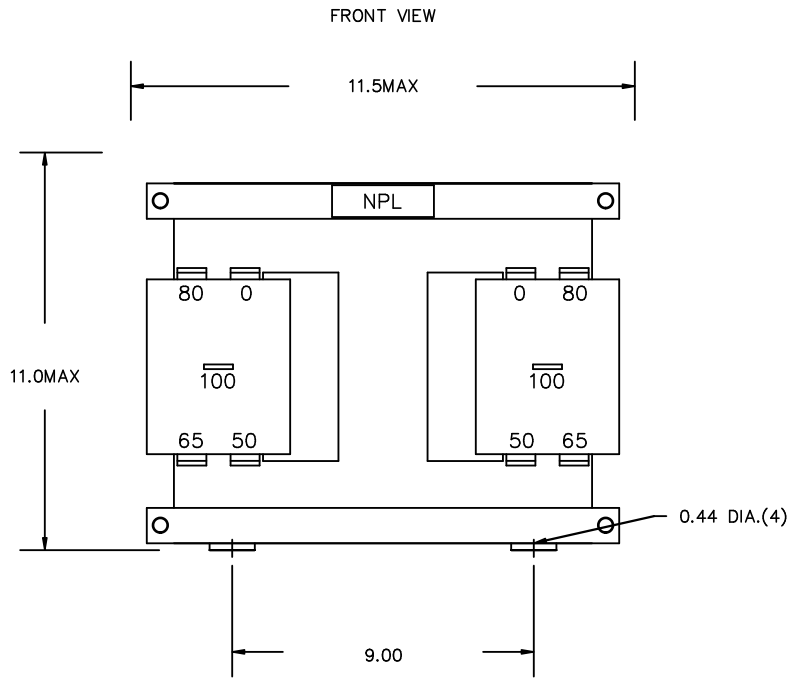


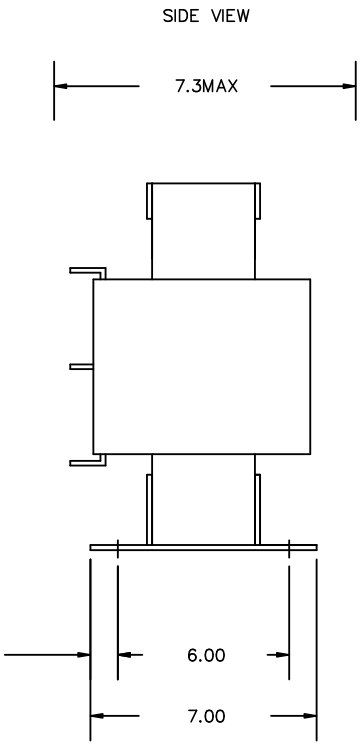


All Dimensions in inches

CUSTOMER NOTES:

Hammond Power Solutions Inc.

TITLE: 3PH AUTO TRANSFORMER

| NO. | DATE | BY | REVISION |
|---|---|---|---|
| | | | |
| | | | |

DES: RBHATIA
DATE: 13/07/02
SCALE: NTS

SHEET 2 OF 2

EDB 2909D.5

0.1 rbhatia 2013/07/04 09:06