Hammond
Power Solutions

GUELPH, ONT. BARABOO, WI. COMPTON, CA. MONTERREY,MX

LR 3902

GENERAL PURPOSE TRANSFORMER 252L E50394 LISTED

HPS FORTRESS™

COMMERCIAL POTTED DISTRIBUTION TRANSFORMER

HV/HT	277V
BIL	–
TERM. BORNES	H1 H2
LV/BT	120V/240V
BIL	–
TERM. BORNES	X4 X2 X3 X1

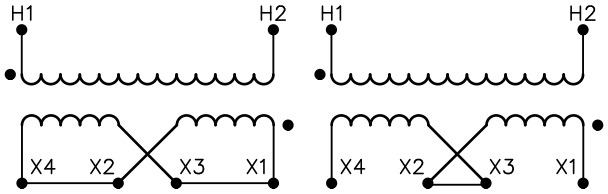

d000013hbsm

8 03423 09369 3

Cust. Ref. Réf. du client	
Serial No. No. de série	
Part No. No. de pièce	C1FC10CE
PHASE	1
kVA	0.10
TYPE	Q
Cooling Refroidissement	ANC
Temp. Class Classe de Temp.	130 °C
Frequency Fréquence	50/60Hz
Impédance % @_____°C	–
Encl. Type Type de boîtier	3R
Wt Poids lbs/kg	6.36/3

COMPLIES WITH EN60742(1997-06)

FABRIQUÉ AU CANADA
MADE IN

Hammond Power Solutions Inc.

TITLE: 1 PHASE ENCAPSULATED TRANSFORMER
NAMEPLATE INFORMATION

NO.	DATE	BY	REVISION	
1	21/07/13	PP	EDB UPDATE	DES: LCEN
				DATE: 08/12/16
				SCALE: NTS

SHEET 1 OF 2

EDBC1FC10CE

1.0 jwen 2021/07/13 16:59

FRONT VIEW

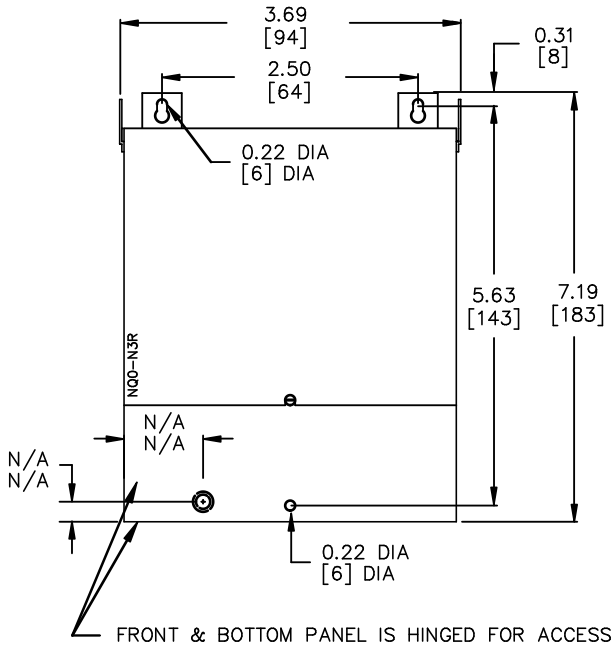

FRONT & BOTTOM PANEL IS HINGED FOR ACCESS TO TERMINALS, BOTTOM MOUNTING HOLES AND REAR KNOCKOUT.

SIDE VIEW

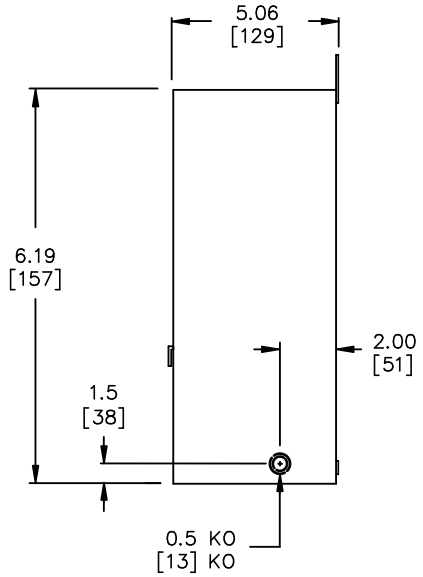

All Dimensions in inches[mm]

ENCLOSURE COLOR : ANSI 61 GREY – OUTDOOR

CUSTOMER NOTES:
- HV1 TERMINATED AT LEADS
- LV1 TERMINATED AT LEADS

Hammond Power Solutions Inc.

TITLE: 1 PHASE ENCAPSULATED TRANSFORMER

NO.	DATE	BY	REVISION
1	21/07/13	PP	EDB UPDATE

DES: LCEN
DATE: 08/12/16
SCALE: NTS

SHEET 2 OF 2

EDBC1FC10CE

1.0 jwen 2021/07/13 16:59