Hammond
Power Solutions

GUELPH, ONT. BARABOO, WI. COMPTON, CA. MONTERREY,MX

LR 3902

GENERAL PURPOSE TRANSFORMER
252L
E50394
LISTED

HPS FORTRESS™

COMMERCIAL POTTED DISTRIBUTION TRANSFORMER

HV/HT	120V X 240V
BIL	–
TERM. BORNES	H1 H3 H2 H4
LV/BT	120V/240V
BIL	–
TERM. BORNES	X4 X2 X3 X1

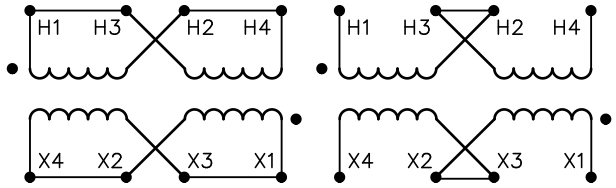

d000013hbsm

8 03423 09384 6

Cust. Ref. / Réf. du client	
Serial No. / No. de série	
Part No. / No. de pièce	C1FC35EE
PHASE	1
kVA	0.35
TYPE	Q
Cooling / Refroidissement	ANC
Temp. Class / Classe de Temp.	130 °C
Frequency / Fréquence	60 Hz
Impédance % @_____°C	–
Encl. Type / Type de boîtier	NEMA–3R
Wt / Poids lbs/kg	14/7

FABRIQUÉ AU CANADA
MADE IN

Hammond Power Solutions Inc.

TITLE: 1 PHASE ENCAPSULATED TRANSFORMER
NAMEPLATE INFORMATION

NO.	DATE	BY	REVISION
1	21/07/16	PP	EDB UPDATE

DES: LCEN
DATE: 08/11/21
SCALE: NTS

SHEET 1 OF 2

EDBC1FC35EE

1.0 jwen 2021/07/16 16:47

FRONT VIEW

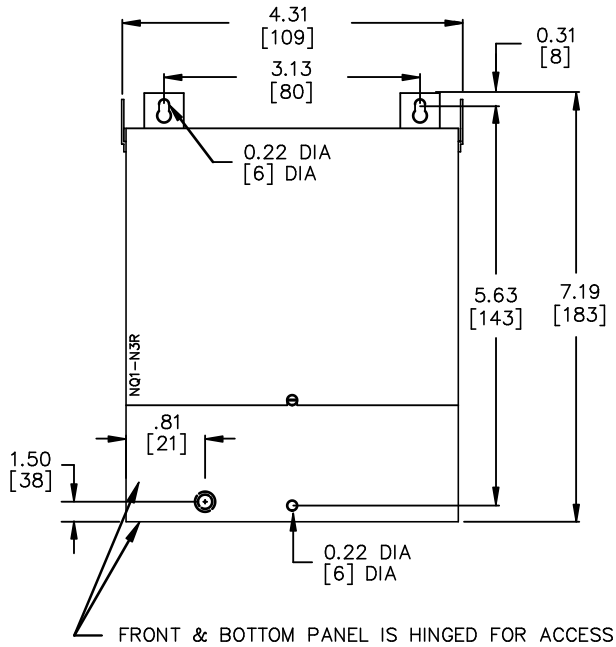

FRONT & BOTTOM PANEL IS HINGED FOR ACCESS TO TERMINALS, BOTTOM MOUNTING HOLES AND REAR KNOCKOUT.

SIDE VIEW

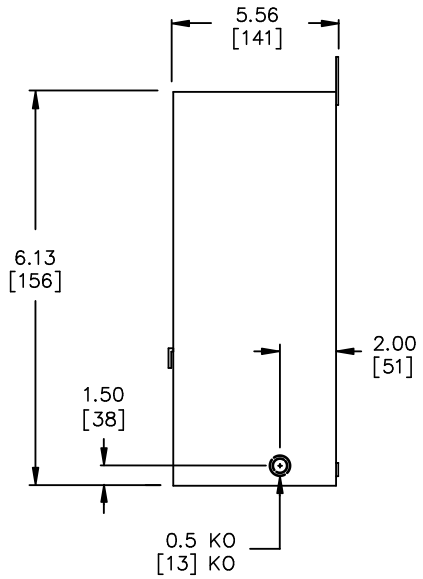

All Dimensions in inches[mm]

ENCLOSURE COLOR : ANSI 61 GREY – OUTDOOR

CUSTOMER NOTES:

Hammond Power Solutions Inc.

TITLE: 1 PHASE ENCAPSULATED TRANSFORMER

NO.	DATE	BY	REVISION
1	21/07/16	PP	EDB UPDATE

DES: LCEN
DATE: 08/11/21
SCALE: NTS

SHEET 2 OF 2

EDBC1FC35EE

1.0 jwen 2021/07/16 16:47