Hammond
Power Solutions

GUELPH, ONT. BARABOO, WI. COMPTON, CA. MONTERREY,MX

LR 3902

GENERAL PURPOSE TRANSFORMER
252L
E50394
LISTED

HPS FORTRESS™

COMMERCIAL POTTED DISTRIBUTION TRANSFORMER

HV/HT	120V X 240V
BIL	–
TERM. BORNES	H1 H3 H2 H4
LV/BT	120V/240V
BIL	–
TERM. BORNES	X4 X2 X3 X1

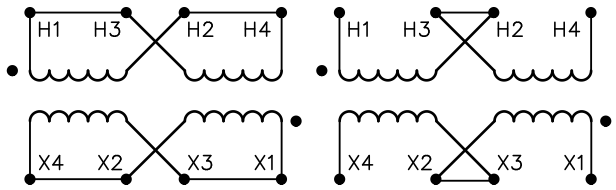

d000013hbsm

8 03423 09223 8

Cust. Ref. Réf. du client	
Serial No. No. de série	
Part No. No. de pièce	C1FC75EES
PHASE	1
kVA	0.75
TYPE	Q
Cooling Refroidissement	ANC
Temp. Class Classe de Temp.	130 °C
Frequency Fréquence	60 Hz
Impédance % @_____°C	
Encl. Type Type de boîtier	3R
Wt Poids lbs/kg	18/9

ELECTROSTATIC SHIELD

FABRIQUÉ AU CANADA
MADE IN

Hammond Power Solutions Inc.

TITLE: 1 PHASE ENCAPSULATED TRANSFORMER
NAMEPLATE INFORMATION

NO.	DATE	BY	REVISION	
1	21/07/13	PP	EDB UPDATE	DES: WWONG
				DATE: 08/12/02
				SCALE: NTS

SHEET 1 OF 2

EDBC1FC75EES

1.0 jwen 2021/07/13 17:00

FRONT VIEW

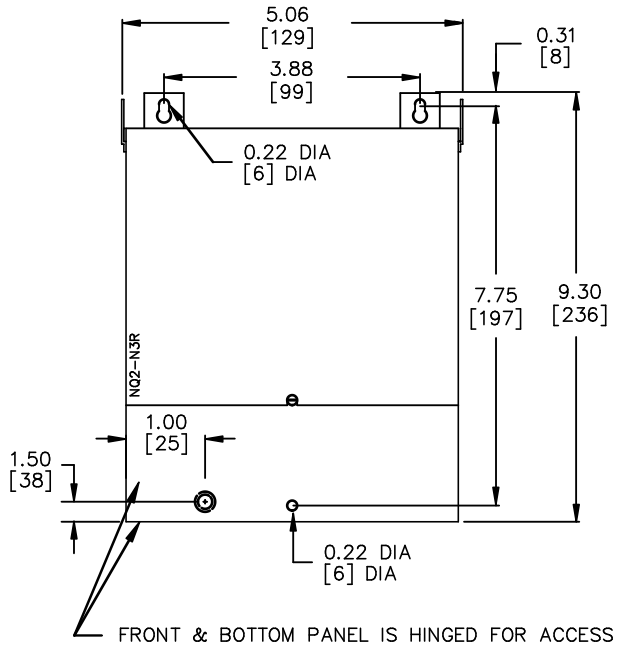

FRONT & BOTTOM PANEL IS HINGED FOR ACCESS TO TERMINALS, BOTTOM MOUNTING HOLES AND REAR KNOCKOUT.

SIDE VIEW

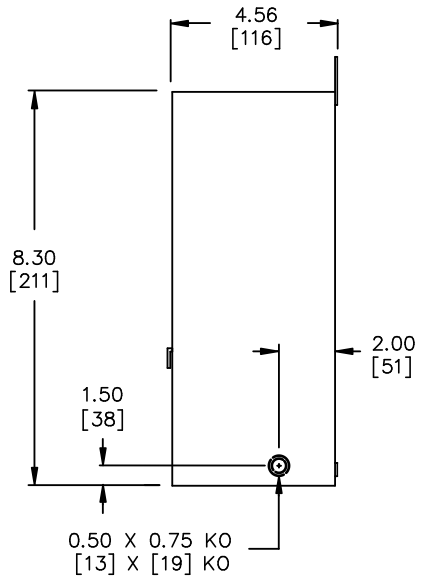

All Dimensions in inches[mm]

ENCLOSURE COLOR : ANSI 61 GREY – OUTDOOR

CUSTOMER NOTES:
- HV1 TERMINATED AT LEADS
- LV1 TERMINATED AT LEADS

Hammond Power Solutions Inc.

TITLE: 1 PHASE ENCAPSULATED TRANSFORMER

NO.	DATE	BY	REVISION
1	21/07/13	PP	EDB UPDATE

DES: WWONG
DATE: 08/12/02
SCALE: NTS

SHEET 2 OF 2

EDBC1FC75EES

1.0 jwen 2021/07/13 17:00