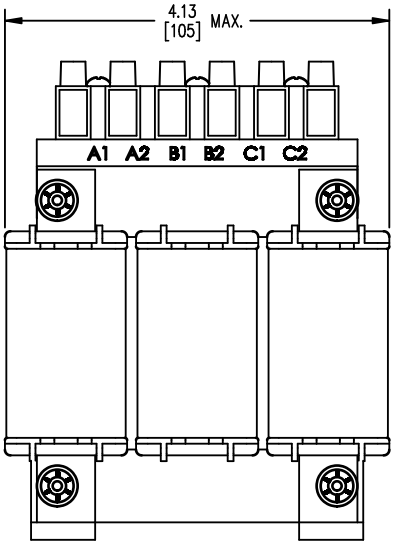

FRONT VIEW

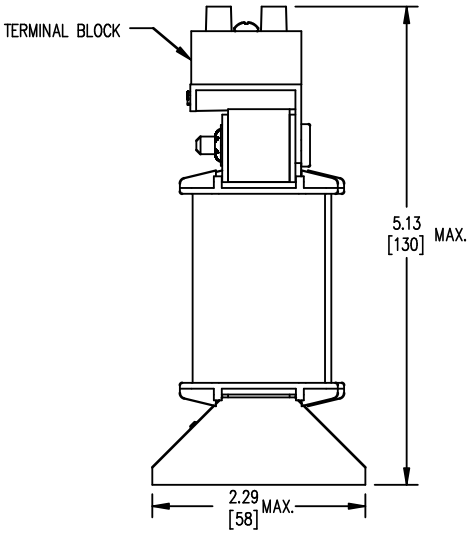

SIDE VIEW

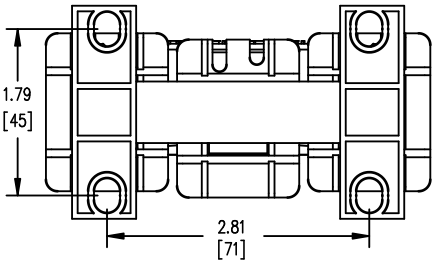

BOTTOM VIEW

TERMINAL BLOCK
SUITABLE FOR
#14 TO #18 AWG
CONDUCTORS
QTY. 1 PER PHASE

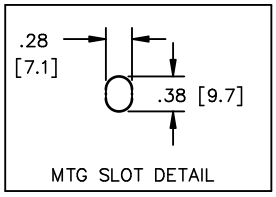

MTG SLOT DETAIL

LR 3902
E61431
IP00

Hammond Power Solutions Inc.	TOLERANCES MOUNTING CENTERS = +/- .06" MOUNTING HOLE SIZE = +/- .005"	THIS DRAWING CONTAINS PROPRIETARY INFORMATION BELONGING TO HAMMOND POWER SOLUTIONS INC., AND IS NOT FOR GENERAL DISTRIBUTION	All Dimensions in Inches mm in Parenthesis	REACTOR

HPS CENTURION R
THREE PHASE DRY TYPE REACTOR
Hammond
Power Solutions

CRX01D8BC

f003781e

27.2MH 50/60 HZ 1.8 AMPS

0.6 KV CLASS TEMP CLASS: 130 TYPE JR-1
TERMINAL TORQUE: 5 LB-IN AMBIENT: 50°C

NOTES:

Hammond Power Solutions Inc.	TITLE:	3 PHASE LINE REACTOR			SHEET 1 OF 1
				DES: PBAKER	EDBCRX01D8BC
				DATE: 14/06/25	
	NO.	DATE	BY	REVISION	SCALE: NTS

0.0 jwen 2023/01/31 11:53